NAPER SETTLEMENT
INNOVATION GATEWAY AND AGRICULTURAL CENTER

523 S. WEBSTER STREET
NAPERVILLE, IL 60540

PROJECT TEAM

CLIENT:
NAPERVILLE HERITAGE SOCIETY
523 S. WEBSTER STREET
NAPERVILLE, IL 60540
CONTACT: HARRIET PISTORIO

CIVIL ENGINEER:
WIGHT & COMPANY
2500 NORTH FRONTAGE ROAD
DARIEN, IL 60561
PHONE: (630)969-7000
FAX: (630)969-7979
CONTACT: SHAWN BENSON
Design Firm Registration #184-000451

LANDSCAPE ARCHITECT:
WIGHT & COMPANY
2500 NORTH FRONTAGE ROAD
DARIEN, IL 60561
PHONE: (630)969-7000
FAX: (630)969-7979
CONTACT: PATTY KING
Design Firm Registration #184-000451

ARCHITECT:
WIGHT & COMPANY
2500 NORTH FRONTAGE ROAD
DARIEN, IL 60561
PHONE: (630)969-7000
FAX: (630)969-7979
CONTACT: LEANNE MEYER-SMITH
Design Firm Registration #184-000451

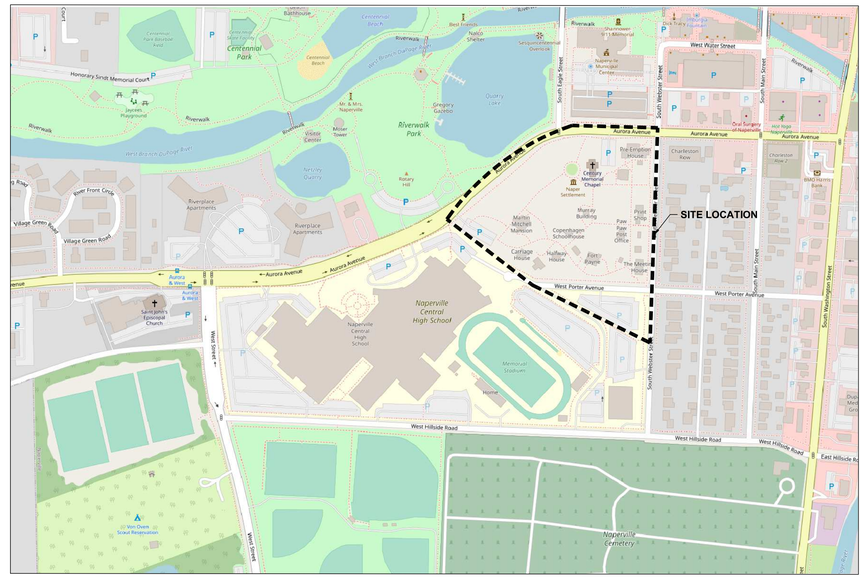

LOCATION MAP

INDEX OF DRAWINGS

CIVIL	
C0.00	COVER SHEET
C0.01	GENERAL NOTES
C1.00	OVERALL EXISTING CONDITIONS
C1.01	DEMOLITION PLAN - INNOVATION GATEWAY
C1.02	DEMOLITION PLAN - AGRICULTURAL CENTER
C1.03	DEMOLITION PLAN - THRESHER PAVILION
C2.00	OVERALL SITE PLAN
C2.01	SITE PLAN - INNOVATION GATEWAY
C2.02	SITE PLAN - AGRICULTURAL CENTER
C2.03	SITE PLAN - THRESHER PAVILION
C3.01	GRADING PLAN - INNOVATION GATEWAY
C3.02	GRADING PLAN - AGRICULTURAL CENTER
C3.03	GRADING PLAN - THRESHER PAVILION
C3.04	EROSION & SEDIMENT CONTROL DETAILS
C4.01	UTILITY PLAN - INNOVATION GATEWAY
C4.02	UTILITY PLAN - AGRICULTURAL CENTER
C4.03	UTILITY PLAN - THRESHER PAVILION
C5.00-C5.05	CIVIL DETAILS

FOR UNDERGROUND UTILITY LOCATIONS,
CALL J.U.L.I.E.
TOLL FREE TEL. 1-800-892-0123

JULIE SUBURBS & DIGG CHICAGO

- YELLOW — GAS
- RED — ELECTRICAL
- ORANGE — PHONE / TV COMMUNICATION
- BLUE — WATER
- GREEN — SEWERS
- WHITE — SAFE TO DIG

REFERENCE BENCHMARKS

CITY OF NAPERVILLE SURVEY MONUMENT #1007: BERNSTEN 3D TOP SECURITY MONUMENT 9/16" Ø STAINLESS STEEL DATUM POINT IN IN 6" PVC PIPE WITH BMAC 6 ALUMINUM ACCESS COVER AT THE SOUTHEAST CORNER OF THE INTERSECTION OF CHARLES STREET AND CHESHIRE LANE. SAID MONUMENT IS 14.3 FEET NORTHEAST OF A SANITARY MANHOLE, 43.2 FEET SOUTHEAST OF THE FIRE HYDRANT CENTER BOLT AND 14.7 FEET NORTH OF A PK NAIL IN THE TOP OF WOOD FENCE POST.

ELEVATION: 733.69 (NAVD 1988)

SITE BENCHMARKS:

SBM#1:

CROSS CUT IN THE WEST CURBLINE OF NAPERVILLE CENTRAL HIGH SCHOOL TURN-AROUND ALONG THE WEST PROPERTY LINE OF SUBJECT SITE. SAID CROSS IS 23.3 FEET SOUTHWEST OF SANITARY MANHOLE IN THE CENTER OF THE ROADWAY, 83.7 FEET WEST OF PORTER AVENUE CURB ANGLE POINT (TO THE EAST AND SOUTHEAST).
NORTHING: 1,858,087.672 EASTING:1,033,308.643

ELEVATION: 692.74

SBM#2:

CROSS CUT IN THE WEST CURBLINE OF WEBSTER STREET 432± FEET SOUTH OF THE INTERSECTION OF WEBSTER STREET AND AURORA AVENUE. SAID CROSS IS 22.4 FEET SOUTHWEST OF SANITARY MANHOLE IN THE WEBSTER STREET ROADWAY AND 74.8 FEET NORTH OF STORM SEWER CURB INLET IN THE WEST CURBLINE OF WEBSTER STREET.
NORTHING: 1,858,368.774 EASTING: 1,033,847.841
ELEVATION: 685.40

SBM#3:

CROSS CUT IN CONCRETE HEADER CURB AT THE NORTHEAST CORNER OF THREE WAY INTERSECTION OF BRICK PAVER PATH. SAID CROSS IS 40± FEET SOUTHWEST OF THE MURRAY HOUSE ENTRANCE AND 124± FEET NORTHEAST OF THE COPENHAGEN SCHOOL HOUSE.
NORTHING: 1,858,395.952 EASTING: 1,033,581.277
ELEVATION: 687.12

SBM#4:

CROSS CUT IN THE SOUTH CONCRETE HEADER ALONG THE BEND OF BRICK PAVER PATH. SAID CROSS IS 6.3 FEET NORTH OF THE NORTHERLY GARDEN FENCE CORNER AND 126± NORTHWEST OF THE CARRIAGE HOUSE ENTRANCE.
NORTHING: 1,858,306.360 EASTING: 1,033,357.177
ELEVATION: 695.64

SBM#5:

CROSS CUT IN THE EAST CONCRETE HEADER AT THE SOUTHEAST CORNER OF THE TEE INTERSECTION OF THE BRICK PAVER PATCH OPPOSITE THE ENTRANCE TO CENTURY MEMORIAL CHAPEL.
NORTHING: 1,858,536.729 EASTING: 1,033,583.091
ELEVATION: 686.12

SBM#6: CROSS CUT IN THE WEST CURBLINE OF WEBSTER STREET 74± FEET SOUTH OF THE INTERSECTION OF WEBSTER STREET AND AURORA AVENUE. SAID CROSS IS 26 FEET NORTHWEST OF SANITARY MANHOLE IN THE WEBSTER STREET ROADWAY AND 36± FEET SOUTH OF TRAFFIC SIGNAL LIGHT AT THE SOUTHWEST CORNER OF SAID INTERSECTION.
NORTHING: 1,858,728.574 EASTING: 1,033,860.284

ELEVATION: 684.00

SHAWN M. BENSON
062-062115
LICENSED PROFESSIONAL ENGINEER
STATE OF ILLINOIS
2020/10/23

Wight & Company
wightco.com
2500 North Frontage Road
Darien, IL 60561
P 630.969.7000
F 630.969.7979

REV	DESCRIPTION	DATE
	ISSUED FOR RESUBMITTAL	10-23-20
	ISSUED FOR PERMIT	09-08-20

NAPER SETTLEMENT
INNOVATION
GATEWAY
& AG CENTER
523 S. WEBSTER STREET
NAPERVILLE, IL 60540

COVER SHEET

Project Number:
200081
Drawn By:
SC
Sheet:
C0.00

S:\Darien\Naper Settlement\200081_PUD Major Change Process\01\11 Drawings\02 CD\C0.00 COVER SHEET.dwg schen Oct 23, 2020 10:33:15 am
Wight © Copyright. All rights reserved. No part of these documents may be reproduced, stored, or transmitted in any form or by any means, electronic, mechanical, photocopying, recording or otherwise, without the prior written consent of Wight.

GENERAL

EXISTING SITE TOPOGRAPHY, UTILITIES, AND HORIZONTAL CONTROL SHOWN ON THE DRAWINGS WERE FIELD MEASURED BY CIVIL & ENVIRONMENTAL CONSULTANTS, INC. DATED 8/24/2020. UNDERGROUND UTILITY LOCATIONS ARE BASED ON BEST AVAILABLE INFORMATION. TRADE CONTRACTOR IS RESPONSIBLE FOR VERIFYING ALL UTILITY LOCATIONS, INVERTS, RIMS, PIPE SIZE, MATERIAL TYPE, ETC. PRIOR TO CONSTRUCTION. ANY DISCREPANCIES SHALL BE BROUGHT TO THE ATTENTION OF THE ENGINEER IMMEDIATELY.

1. ELEVATIONS ARE BASED ON ILLINOIS STATE PLANE COORDINATE SYSTEM NAVD 88 DATUM.
2. THE TRADE CONTRACTOR SHALL SUBSCRIBE TO ALL GOVERNING REGULATIONS AND SHALL ABIDE BY THE REQUIREMENTS OF ALL APPLICABLE PERMITS.
3. ALL APPLICABLE PROVISIONS OF THE CURRENT OCCUPATIONAL HEALTH AND SAFETY ACT ARE HEREIN INCORPORATED BY REFERENCE.
4. NO BURNING OR INCINERATION OF RUBBISH IS PERMITTED ON THE SITE.
5. STREET AND DRIVEWAY PAVEMENT SHALL BE PROTECTED FROM DAMAGE. ANY DAMAGE SHALL BE REPAIRED PER THE CITY OF NAPERVILLE REQUIREMENTS. MATERIALS AND WORKMANSHIP OF REPAIRS SHALL CONFORM TO THE "IDOT STANDARD SPECIFICATIONS FOR ROAD AND BRIDGE CONSTRUCTION IN ILLINOIS (LATEST EDITION), THE SUPPLEMENTAL SPECIFICATIONS AND RECURRING SPECIAL PROVISIONS (LATEST EDITION)", HEREIN AFTER REFERRED TO AS "STANDARD SPECIFICATIONS' AND THE CITY OF NAPERVILLE REQUIREMENTS.
6. THE "DEVELOPMENT REGULATIONS", LATEST EDITION, AS ADOPTED BY THE CITY OF NAPERVILLE, ILLINOIS, HEREIN AFTER REFERRED TO AS THE "DEVELOPMENT REGULATIONS", INCLUDING ALL CITY STANDARD DETAILS AND SPECIFICATIONS; THE "STANDARD SPECIFICATIONS FOR ROAD AND BRIDGE CONSTRUCTION (LATEST EDITION) AND THE SUPPLEMENTAL SPECIFICATIONS AND RECURRING SPECIAL PROVISIONS (LATEST EDITION)" PREPARED BY ILLINOIS DEPARTMENT OF TRANSPORTATION (IDOT), HEREIN AFTER REFERRED TO AS THE "STANDARD SPECIFICATIONS"; AND ILLINOIS ENVIRONMENTAL PROTECTION AGENCY ILLINOIS URBAN MANUAL, LATEST EDITION, AND "STANDARD SPECIFICATIONS FOR WATER AND SEWER MAIN CONSTRUCTION IN ILLINOIS", HEREIN AFTER REFERRED TO AS "ISPE STANDARDS" SHALL GOVERN THE CONSTRUCTION OF THESE IMPROVEMENTS EXCEPT AS MODIFIED BY THE CONTRACT DOCUMENTS.
7. ALL CONNECTIONS TO EXISTING UTILITIES SHALL BE CONSTRUCTED IN ACCORDANCE WITH THE REGULATIONS OF THE CITY OF NAPERVILLE, ILLINOIS AND THE STANDARD SPECIFICATIONS FOR WATER AND SEWER MAIN CONSTRUCTION IN ILLINOIS, HEREIN AFTER REFERRED TO AS ISPE STANDARDS.
8. ALL FACILITIES OR LANDSCAPING DAMAGED DURING CONSTRUCTION SHALL BE RESTORED TO ORIGINAL CONDITION BY THE RESPONSIBLE TRADE CONTRACTOR.
9. PROPOSED ELEVATIONS INDICATE FINISHED GRADES. FOR SUBGRADE ELEVATIONS, ALLOW FOR THICKNESS OF PROPOSED PAVING OR TOPSOIL THICKNESS.
10. THE TRADE CONTRACTOR SHALL NOTIFY THE CITY OF NAPERVILLE, ILLINOIS 48 HOURS BEFORE THE COMMENCEMENT OF CONSTRUCTION.
11. SHOULD THE TRADE CONTRACTOR ENCOUNTER FIELD DRAINAGE TILE NOT SHOWN ON THE DRAWINGS, THE CONTRACTOR SHALL IMMEDIATELY CONTACT ENGINEER AND THE CITY OF NAPERVILLE FOR INSTRUCTIONS. SHOULD THE ENGINEER OR CITY OF NAPERVILLE INSTRUCT THAT DAMAGED FIELD TILES BE RESTORED TO THEIR ORIGINAL CONDITION, THAT REPAIR SHALL BE CONSIDERED INCIDENTAL TO THE CONTRACT, THE LOCATION OF FOUND DRAINAGE TILE SHALL BE INDICATED ON THE RECORD DRAWINGS.
12. ALL TRENCHES SHOULD FOLLOW THE CITY OF NAPERVILLE STANDARD DETAILS INCLUDED IN THE CIVIL DETAILS. TRENCHES ARE TO BE BACKFILLED WITH TRENCH BACKFILL AND COMPACTED TO 95% MODIFIED PROCTOR DENSITY, AS REQUIRED BY THE CITY OF NAPERVILLE AND THE ISPE STANDARDS.
13. TRADE CONTRACTOR IS RESPONSIBLE FOR CALLING J.U.L.I.E. AT 1-800-892-0123 OR 811 AND NOTIFYING THE CONSTRUCTION MANAGER AT LEAST 48 HOURS PRIOR TO BEGINNING ANY EXCAVATION, CONTRACTOR IS RESPONSIBLE FOR MAINTAINING UTILITY MARKINGS THROUGHOUT CONSTRUCTION.
14. ALL DIMENSIONS, CURB RADII AND ELEVATIONS REFER TO THE BACK OF CURB WHERE CURB IS SHOWN. COORDINATES ARE TO BACK OF CURB, CENTER OF STRUCTURES OR AS SHOWN.
15. WHERE PAVEMENT, CURB OR SIDEWALK REMOVAL IS REQUIRED, THE TRADE CONTRACTOR SHALL SAW CUT THE BOUNDARIES OF THE AREA TO BE REMOVED PRIOR TO DEMOLITION.
16. TRADE CONTRACTOR IS RESPONSIBLE FOR LAYOUT. LINE AND GRADE FOR ITEMS INCLUDED IN THE CONTRACT SCOPE OF WORK. CONTRACTOR TO USE CAD FILES AS PROVIDED BY THE ENGINEER FOR GEOMETRIC LAYOUT.
17. TRADE CONTRACTOR IS RESPONSIBLE FOR KEEPING THE PUBLIC STREET CLEAN OF DEBRIS.
18. ALL EXISTING UTILITY STRUCTURES SHALL BE ADJUSTED AS NECESSARY TO MATCH FINISH GRADE. ALL EXISTING UTILITY STRUCTURES REQUIRING ADJUSTMENT OR RECONSTRUCTION SHALL BE COMPLETED BY THE CONTRACTOR TO THE SATISFACTION OF THE UTILITY OWNER. ADJUSTMENTS AND/OR RECONSTRUCTIONS NOT CALLED FOR ON THE PLANS SHALL BE CONSIDERED INCIDENTAL TO THE CONTRACT. NO MORE THAN A TOTAL OF 12 INCHES OF ADJUSTING RINGS AND/OR 2 ADJUSTING RINGS SHALL BE ALLOWED.
19. IF EXISTING UTILITY LINES OF ANY NATURE ARE ENCOUNTERED WHICH CONFLICT IN LOCATION AND/OR ELEVATION WITH NEW CONSTRUCTION, THE CONTRACTOR SHALL NOTIFY THE ENGINEER AND CONSTRUCTION MANAGER SO THAT THE CONFLICT MAY BE RESOLVED.
20. RECORD DRAWINGS ARE REQUIRED TO BE SUBMITTED AND APPROVED BY THE CITY OF NAPERVILLE
21. THE CONTRACTOR IS RESPONSIBLE FOR ALL AS-BUILT SURVEYS. ALL AS-BUILT SURVEYS SHALL BE COMPLETED BY A PROFESSIONAL LAND SURVEYOR AND BE SIGNED AND SEALED. THE CONTRACTOR SHALL SUBMIT TWO SETS OF THE "AS-BUILT" FINAL ENGINEERING DRAWINGS (I.E. RECORD DRAWINGS) AND STORMWATER MANAGEMENT CALCULATIONS UPON COMPLETION OF IMPROVEMENTS AND INCLUDE ELECTRONIC CAD FILES. THE RECORD DRAWINGS SHOULD AT LEAST INCLUDE THE FOLLOWING INFORMATION: AS-BUILT DETENTION CONTOURS, ELEVATIONS (INCLUDING DETENTION BASIN TOP OF BERM AND OVERFLOW WEIR GRADES) AND VOLUME (VERIFIED, SIGNED, & SEALED BY A PROFESSIONAL ENGINEER (PE) OR PROFESSIONAL LAND SURVEYOR (PLS)); ELEVATION, AND LOCATION (TIES TO TWO POINTS) OF ALL NEW STRUCTURES INCLUDING FIRE HYDRANTS, VALVE BOXES AND VAULTS, LINESTOP SLEEVES, WATER SERVICE CORPORATION STOPS, WATER MAIN FITTINGS/BENDS, MANHOLES, SANITARY SERVICE WYES (MEASURED FROM DOWNSTREAM MANHOLE), ALL STORM/SANITARY SEWER STRUCTURES (INCLUDING INVERTS AND PIPE SIZES), ALL PIPES (LOCATIONS, SLOPES, LENGTHS, ETC.), OUTLET CONTROL STRUCTURES (INCLUDING RESTRICTOR SIZES AND ELEVATIONS PLUS TOP OF WALL) AND ABANDONED WATER OR SANITARY SERVICE LINES. DETAILED TOPOGRAPHIC SURVEY OF ALL HIGH POINTS, LOW POINTS, CHANGE OF SLOPE INCLUDING GUTTER GRADES, TOP OF CURB GRADES, PAVEMENT GRADES, SIDEWALK GRADES, RAMP GRADES, ETC. TO VERIFY POSITIVE DRAINAGE. ALL ELEVATIONS SHOULD BE REFERENCED TO THE SAME BENCHMARK DATUM AS THE ORIGINAL DESIGN PLANS. HORIZONTAL TIES SHALL BE REFERENCED TO LOT LINES, BACK OF CURB, OR PROPERTY CORNERS. WITHIN DETENTION/BMP AREAS: FOR VERIFICATION OF DETENTION VOLUME AND SUBBASE GRADES, PRIOR TO BACK FILLING WITH CA-7. THE CONTRACTOR SHALL PROVIDE ENGINEER WITH A CERTIFIED TOPO SURVEY OF AS-BUILT SUBBASE GRADES FOR ENGINEER APPROVAL AND ALSO A COPY OF RECEIPT OF THE CA-7 AGGREGATE.
22. THE CONTRACTOR SHALL INDEMNIFY AND HOLD HARMLESS THE CITY OF NAPERVILLE.
23. EMERGENCY VEHICLE ACCESS IS TO BE MAINTAINED THROUGHOUT DURATION OF PROJECT. VEHICLE ACCESS IS TO BE CLEARLY MARKED. ANY ALTERATION OF EMERGENCY VEHICLE ROUTE OR ACCESS IS TO BE APPROVED BY THE CITY OF NAPERVILLE, ILLINOIS.

CITY CONTACT INFORMATION:

WILLIAM NOVACK
TRANSPORTATION, ENGINEERING, AND DEVELOPMENT GROUP
CITY OF NAPERVILLE
400 S. EAGLE STREET
NAPERVILLE, IL 60540

TRAFFIC CONTROL

1. THE TRADE CONTRACTOR SHALL PROVIDE TRAFFIC CONTROL (IDOT STANDARD 701006) AT ALL TIMES WHEN ANY VEHICLES, EQUIPMENT, WORKER, OR ACTIVITY ENCROACH ADJACENT ROADWAYS FROM 15 FEET TO THE EDGE OF PAVEMENT. THE TRADE CONTRACTOR SHALL PROVIDE TRAFFIC CONTROL (IDOT STANDARD 701501) WHEN ACTIVITY ENCROACHES THE EDGE OF PAVEMENT FOR THESE ROADS.
2. IF THE OPERATION IS 15 FEET OR MORE, OFF THE EDGE OF PAVEMENT, NO SIGNING WILL BE REQUIRED UNLESS TWO OR MORE VEHICLES CROSS THE 15 FOOT CLEAR ZONE IN ONE HOUR
3. WHEN WORKING WITHIN 2 FEET OF THE PAVEMENT EDGE, CONES, DRUMS, OR BARRICADES SHALL BE PLACED ACCORDING TO THE STANDARD 701101 REQUIREMENTS.
4. CONTRACTOR MUST FOLLOW ALL CITY OF NAPERVILLE AND IDOT REQUIREMENTS FOR TRAFFIC CONTROL.

HOT MIX ASPHALT PAVING

1. SUBGRADE PREPARATION, BASE COURSE PLACEMENT, AND HMA PAVEMENT SHALL BE IN ACCORDANCE WITH APPLICABLE SECTIONS OF THE STANDARD SPECIFICATIONS AND RECOMMENDATIONS OF THE GEOTECHNICAL REPORT.
2. DEPRESSIONS OF FINAL HMA SURFACES SHALL NOT EXCEED 1/4 INCH FROM PROPOSED CORRECTIONS TO NON-COMPLIANT AREAS ORDERED BY THE CONSTRUCTION MANAGER SHALL BE MADE AT NO ADDITIONAL CHARGE.
3. ALL SIGNAGE AND STRIPING SHALL BE IN ACCORDANCE WITH THE STANDARD SPECIFICATIONS AND THE MANUAL ON UNIFORM TRAFFIC CONTROL DEVICES, LATEST EDITION.

EARTHWORK

1. ALL AREAS SHALL BE CLEARED AND TILLED IN PREPARATION TO RECEIVE SEED. REFER TO SPECIFICATIONS FOR REQUIREMENTS.
2. THE TRADE CONTRACTOR SHALL APPLY FERTILIZER AND SEED TO ALL DISTURBED AREAS. AS NOTED ON THE CONSTRUCTION DRAWINGS. TRADE CONTRACTOR SHALL APPLY FERTILIZER AND SEED USING THE HYDROSEED METHOD, FERTILIZER AND SEED QUANTITIES AND SEEDING PROCEDURES SHALL CONFORM TO THE SPECIFICATIONS.
3. THE TRADE CONTRACTOR WILL INSPECT THE SEEDED AREAS AFTER SEEDING, TO RECEIVE FINAL ACCEPTANCE, SEEDED AREAS MUST SUPPORT DENSE, THRIVING GRASSES SUFFICIENT TO PROTECT THE SOIL FROM EROSION IN A MODERATE RAINFALL. AREAS THAT, IN THE OPINION OF THE OWNER & ENGINEER, DO NOT MEET THIS REQUIREMENT, MUST BE IMMEDIATELY RESEEDED. REFER TO SPECIFICATIONS FOR ALL REQUIREMENTS.
4. TOPSOIL FOR RESTORATION AREAS SHALL COMPLY WITH THE STANDARD SPECIFICATIONS. TOPSOIL MAY BE SALVAGED FROM THE SITE AND STOCKPILED FOR REUSE WHEN ALL WORK IS COMPLETED, ADDITIONAL TOPSOIL REQUIRED TO COMPLETE THE JOB SHALL BE OBTAINED FROM OFF-SITE SOURCES AT THE TRADE CONTRACTOR'S EXPENSE. SALVAGED TOPSOIL SHALL BE SUBJECT TO THE ENGINEER'S APPROVAL AND WILL BE REJECTED IF NOT CLEAN. UNCONTAMINATED MATERIAL.
5. THE CROWNS AND ROOT OF TREES WHICH ARE TO BE PRESERVED IN THE PROJECT AREA, BUT WHICH COULD BE NEGATIVELY AFFECTED DURING THE CONSTRUCTION PROCESS, SHALL BE PRUNED BY A QUALIFIED ARBORIST ACCORDING TO THE TREE PRUNING STANDARDS SET BY ANSI 2100 CODE.
6. POROUS GRANULAR EMBANKMENT, SUBGRADE

THIS WORK CONSISTS OF FURNISHING, PLACING, AND COMPACTING POROUS GRANULAR MATERIAL AS DIRECTED BY THE ENGINEER. POROUS GRANULAR EMBANKMENT SHALL CONSIST OF CA-1 AGGREGATE CAPPED WITH A 3 INCHES NOMINAL THICKNESS TOP LIFT OF CA-6 CAPPING AGGREGATE, THE MATERIAL SHALL BE USED AS A BRIDGING LAYER OVER SOFT, PUMPY, AND LOOSE SOIL AND SHALL CONFORM.

THE POROUS GRANULAR MATERIAL SHALL BE PLACED IN ONE LIFT WHEN THE TOTAL THICKNESS TO BE PLACED IS 2 FEET OR LESS OR AS DIRECTED BY THE ENGINEER. EACH LIFT OF THE POROUS GRANULAR MATERIAL SHALL BE ROLLED WITH A VIBRATORY ROLLER MEETING THE REQUIREMENTS OF THE STANDARD SPECIFICATIONS TO OBTAIN THE DESIRED KEYING OR INTERLOCK AND COMPACTION. THE ENGINEER SHALL VERIFY THAT ADEQUATE KEYING HAS BEEN OBTAINED.

CONSTRUCTION EQUIPMENT NOT NECESSARY FOR THE COMPLETION OF THE REPLACEMENT MATERIAL WILL NOT BE ALLOWED ON THE UNDERCUT AREAS UNTIL COMPLETION OF THE RECOMMENDED THICKNESS OF THE POROUS GRANULAR EMBANKMENT SUBGRADE.

FULL DEPTH SUBGRADE UNDERCUT SHOULD OCCUR AT LIMITS DETERMINED BY THE ENGINEER. A TRANSITION SLOPE TO THE FULL DEPTH OF UNDERCUT SHALL BE MADE OUTSIDE OF THE UNDERCUT LIMITS AT A TAPER OF 1 FOOT LONGITUDINAL PER 1 INCH DEPTH BELOW THE PROPOSED SUBGRADE OR BOTTOM OF THE PROPOSED AGGREGATE SUBGRADE WHEN INCLUDED IN THE CONTRACT.

THIS WORK WILL BE MEASURED FOR PAYMENT IN ACCORDANCE THE STANDARD SPECIFICATIONS. WHEN SPECIFIED ON THE CONTRACT, THE THEORETICAL ELEVATION OF THE BOTTOM OF THE AGGREGATE SUBGRADE SHALL BE USED TO DETERMINE THE UPPER LIMIT OF POROUS GRANULAR EMBANKMENT, SUBGRADE. THE VOLUME WILL BE COMPUTED BY THE METHOD OF AVERAGE END AREAS.

THIS WORK SHALL BE PAID FOR AT THE CONTRACT UNIT PRICE PER CUBIC YARD FOR POROUS GRANULAR EMBANKMENT, SUBGRADE WHICH PRICE SHALL INCLUDE THE CAPPING AGGREGATE, WHEN REQUIRED.

THE POROUS GRANULAR EMBANKMENT, SUBGRADE SHALL BE USED AS FIELD CONDITIONS WARRANT AT THE TIME OF CONSTRUCTION.

7. SPECIAL EXCAVATION

WORK UNDER THIS ITEM SHALL BE PERFORMED IN ACCORDANCE WITH THE STANDARD SPECIFICATIONS EXCEPT AS HEREIN MODIFIED.

SPECIAL EXCAVATION SHALL INCLUDE THE SATISFACTORY REMOVAL AND OFF-SITE DISPOSAL OF ALL UNSUITABLE MATERIAL BELOW THE SUBGRADE ELEVATION.

AFTER EXCAVATING TO THE REQUIRED SUBGRADE LEVEL, THE ENGINEER & GEOTECH ENGINEER SHALL INSPECT THE SUBGRADE. PRIOR TO PLACING ANY PAVEMENT SECTION MATERIAL THE EXCAVATION LEVEL OR SUBGRADE LEVEL SHALL BE COMPACTED AND, WHERE POSSIBLE, PROOF ROLLED WITH A 40,000 LB TANDEM AXLE TRUCK BY MAKING AT LEAST 4 PASSES. THE COMPACTING AND PROOF ROLLING WILL DETECT SOFT OR UNSTABLE POCKETS OF MATERIAL WHICH SHALL BE REMOVED AND REPLACED AS HEREIN SPECIFIED. THE COMPACTING AND PROOF ROLLING SHALL BE INCIDENTAL TO THE WORK AND NO ADDITIONAL COMPENSATION WILL BE PAID.

IF THE EXISTING SUBGRADE SOIL IS NOT SUITABLE FOR PROVIDING AN IBR SOIL SUPPORT VALUE OF 2, THE TRADE CONTRACTOR SHALL REMOVE THE UNSUITABLE SUBGRADE SOIL BELOW THE PROPOSED SUBGRADE LEVEL TO A DEPTH AS DIRECTED BY THE ENGINEER. COMPACT AND PROOF ROLL THE EXCAVATED AREA. IF UPON PROOF ROLLING THE SUBGRADE IS STILL UNSUITABLE, ADDITIONAL EXCAVATION MAY BE REQUIRED. NO ADDITIONAL COMPENSATION WILL BE MADE REGARDLESS OF THE NUMBER OF TIMES THE AREA IS COMPACTED AND PROOF ROLLED.

CA-1 SHALL BE USED TO BRING THE SUBGRADE TO THE PROPOSED ELEVATION AS INDICATED UNDER THE ITEM POROUS GRANULAR EMBANKMENT, SUBGRADE. POROUS GRANULAR EMBANKMENT, SUBGRADE IS NOT CONSIDERED PART OF THIS ITEM.

THOSE AREAS OF SUBGRADE WHICH ARE NOT OVER EXCAVATED SHALL ALSO BE COMPACTED TO 95% OF MAXIMUM DENSITY AS DETERMINED BY AASHTO T-99.

SPECIAL EXCAVATION AS SHOWN ON THE PLANS AND AS DIRECTED BY THE ENGINEER WILL BE MEASURED FOR PAYMENT IN PLACE AND THE VOLUME IN CUBIC YARDS COMPUTED BY THE METHOD OF AVERAGE END AREAS. EXCAVATION IN EXCESS OF THAT AUTHORIZED SHALL NOT BE MEASURED FOR PAYMENT.

THIS WORK SHALL BE PAID FOR AT THE CONTRACT UNIT CUBIC YARD FOR SPECIAL EXCAVATION, WHICH PRICE SHALL INCLUDE ALL COSTS ASSOCIATED WITH UNSUITABLE MATERIAL REMOVAL AND LEGAL DISPOSAL, GRADING COMPACTING AND PROOF ROLLING OF SUBGRADE.

8. THE OWNER IS REQUIRED TO HAVE A GEOTECHNICAL ENGINEER ON-SITE TO MONITOR EARTHWORK, AND THE GRADING ACTIVITY. IN ORDER TO IDENTIFY UNSUITABLE SOILS FOR REMOVAL FROM THE SITE. CONTRACTOR TO ENSURE REQUIREMENTS ARE MET.

STORM SEWER

1. NO CONNECTION TO AN EXISTING PUBLIC STORM SEWER MAY BE MADE WITHOUT PERMISSION OF THE DEPARTMENT OF PUBLIC WORKS - CONTACT PERSON: FRED GIRARD 630-305-5369
2. THE CONTRACTOR SHALL REPAIR ANY EXISTING FIELD DRAINAGE TILE DAMAGED DURING CONSTRUCTION AND PROPERLY REROUTE AND/OR CONNECT ALL TILE TO THE NEAREST STORM SEWER OUTLET. ALL LOCATIONS OF ENCOUNTERED FIELD DRAINAGE TILE SHALL BE PROPERLY INDICATED ON THE CONTRACTOR'S RECORD DRAWINGS.
3. THE FOLLOWING MATERIALS ARE PERMITTED FOR STORM SEWER AND PIPE CULVERTS. WHERE A PARTICULAR MATERIAL IS SPECIFIED IN THE PLANS OR SPECIAL PROVISIONS, NO OTHER KIND OF MATERIAL WILL BE PERMITTED:
   - 3.1. REINFORCED CONCRETE PIPE (RCP) - REINFORCED CONCRETE PIPE SHALL CONFORM TO ASTM DESIGNATION C 76, CLASSES I, II, III, IV OR V. BITUMINOUS JOINTS SHALL CONFORM TO ASTM DESIGNATIONS C 14 OR C 76 AS MAY BE APPLICABLE. BITUMINOUS MATERIAL SHALL CONSIST OF A HOMOGENEOUS BLEND OF BITUMEN, INERT FILLER, AND SUITABLE SOLVENT APPROVED BY THE CITY ENGINEER. RUBBER GASKET JOINTS SHALL CONFORM TO ASTM C 433. REINFORCED CONCRETE PIPE SHALL ALSO BE PERMITTED AS ROUND, ELLIPTICAL, OR BOX SHAPED OR AS REINFORCED CONCRETE ARCH CULVERT.
   - 3.2. NON-REINFORCED CONCRETE PIPE - NON-REINFORCED CONCRETE PIPE SHALL BE ALLOWED FOR PIPES WITH A 10 INCH OR SMALLER DIAMETER. NON-REINFORCED CONCRETE PIPE SHALL CONFORM TO ASTM DESIGNATION C 14, CLASS 3. BITUMINOUS JOINTS SHALL CONFORM TO ASTM DESIGNATIONS C 14 OR C 76 AS MAY BE APPLICABLE. BITUMINOUS MATERIAL SHALL CONSIST OF A HOMOGENOUS BLEND OF BITUMEN, INERT FILLER, AND SUITABLE SOLVENT APPROVED BY THE CITY ENGINEER. RUBBER GASKET JOINTS SHALL CONFORM TO ASTM C 433.
   - 3.3. DUCTILE IRON PIPE (DIP) - DUCTILE IRON PIPE SHALL CONFORM TO ANSI A 21.51 (AWWA C-151), CLASS THICKNESS DESIGNED PER ANSI A 21.50 (AWWA C-150). TAR (SEAL) COATED AND CEMENT LINED PER ANSI A 21.4 (AWWA C-104). WITH MECHANICAL OR RUBBER RING (SLIP SEAL OR PUSH ON) JOINTS. ALL DUCTILE IRON PIPE SHALL BE WRAPPED WITH POLYETHYLENE.
   - 3.4. POLYVINYL CHLORIDE PIPE (PVC) - POLYVINYL CHLORIDE (PVC) PIPE SHALL CONFORM TO ASTM D 3034, TYPE PSM, THE MINIMUM STANDARD DIMENSION RATIO (SDR) SHALL BE 26. THE PIPE SHALL BE MADE OF PVC PLASTIC HAVING A MINIMUM CELL CLASSIFICATION OF 12454-C, AND SHALL HAVE A MINIMUM PIPE STIFFNESS OF FORTY-SIX (46) LBS, PER INCH (317 KPA). JOINTS FOR PVC PIPE SHALL BE FLEXIBLE ELASTOMETRIC SEALS PER ASTM D 3213.
   - 3.5. HIGH DENSITY POLYETHYLENE PIPE (HDPE) - HIGH-DENSITY POLYETHYLENE (HDPE) PIPE SHALL CONFORM TO THE REQUIREMENTS OF ASSHTO M 252 AND M 294. PIPE AND FITTINGS SHALL BE MADE FROM VIRGIN PE COMPOUNDS WHICH CONFORM TO THE REQUIREMENTS OF CELL CLASS 324420C AS DEFINED AND DESCRIBED IN ASTM D 3350. RUBBER GASKET JOINTS SHALL BE USED.
4. BEDDING, OTHER THAN CONCRETE EMBEDMENT, SHALL CONSIST OF GRAVEL, CRUSHED GRAVEL, OR CRUSHED STONE ⅛ INCH TO 1 INCH IN SIZE, AS A MINIMUM, THE MATERIAL SHALL CONFORM TO THE REQUIREMENTS OF IDOT STANDARD SPECIFICATIONS, THE GRADATION SHALL CONFORM TO TRADITIONS CA-7 OR CA-11 OF THE STANDARD SPECIFICATIONS.
5. BACKFILL MATERIAL SHALL CONFORM TO THE REQUIREMENTS OF IDOT STANDARD SPECIFICATIONS. THE GRADATION SHALL CONFORM TO GRADATION CA-6 OF THE STANDARD SPECIFICATIONS. BACK FILL MATERIAL SHALL BE COMPACTED TO 95% STANDARD PROCTOR DENSITY.
6. JOINTS CONNECTING DISSIMILAR PIPE MATERIALS SHALL BE MADE WITH SEWER CLAMP NON-SHEAR TYPE COUPLINGS; CASCADE CSS, ROMAC LSS, FERNCO, INC. SHEAR RING, OR APPROVED EQUAL. WHEN AVAILABLE, A STANDARD JOINT WITH A TRANSITION GASKET MAY BE USED. THE NAME OF THE MANUFACTURER, CLASS, AND DATE OF ISSUE SHALL BE CLEARLY IDENTIFIED ON ALL SECTIONS OF PIPE. THE CONTRACTOR SHALL ALSO SUBMIT BILLS OF LADING, OR OTHER QUALITY ASSURANCE DOCUMENTATION WHEN REQUESTED BY THE CITY ENGINEER. ALL NUTS AND BOLTS FOR COUPLING SHALL BE STAINLESS STEEL.
7. MANHOLES FOR STORM SEWERS SHALL HAVE A MINIMUM INSIDE DIAMETER OF 48 INCHES AND SHALL BE CONSTRUCTED OF PRECAST CONCRETE UNITS IN ACCORDANCE WITH ASTM C478-05 (OR LATEST EDITION) AND SHALL CONFORM TO THE CITY OF NAPERVILLE STANDARD DETAIL. ALL MANHOLES SHALL BE WATER-TIGHT. ALL VISIBLE LEAKS SHALL BE SEALED IN A MANNER ACCEPTABLE TO THE CITY ENGINEER.
8. MANHOLES SHALL BE FURNISHED WITH A SLEF-SEALING FRAME AND SOLID COVER (EAST JORDAN IRON WORKS 1022 WITH TYPE A SOLID COVER, OR APPROVED EQUAL) WITH THE WORD "STORM" IMPRINTED ON THE COVER IN RAISED LETTERS. ALL FRAMES AND LIDS SHALL MEET OR EXCEED ASHTO H-20 LOADING SPECIFICATIONS. FRAMES SHALL BE SHOP PAINTED WITH ASPHALTIC BASE PAINT. BOTH THE MANHOLE FRAME AND COVER SHALL HAVE MACHINED HORIZONTAL AND VERTICAL BEARING SURFACES. INVERTED MANHOLES FRAMES ARE NOT ALLOWED. PICK HOLES SHALL NOT CREATE OPENING IN THE MANHOLE COVER.
9. MANHOLE STEPS ON MAXIMUM 16 INCH CENTER SHALL BE FURNISHED WITH EACH MANHOLE, SECURELY ANCHORED IN PLACE, TRUE TO VERTICAL ALIGNMENT, IN ACCORDANCE WITH THE NAPERVILLE STANDARD DETAILS. STEPS SHALL BE COPOLYMER POLYPROPYLENE REINFORCED WITH ½ INCH A615/A615-05A (OR LATEST EDITION) GRADE 60 STEEL REINFORCEMENT, MEETING OR EXCEEDING ASTM C 478-05 (OR LATEST EDITION) AND OSHA STANDARDS.
10. CATCH BASINS AND INLETS SHALL HAVE A MINIMUM INSIDE DIAMETER OF 24 INCHES AND SHALL BE CONSTRUCTED OF PRECAST CONCRETE UNITS IN ACCORDANCE WITH ASTM C478-05 (OR LATEST EDITION) AND SHALL CONFORM TO THE CITY OF NAPERVILLE STANDARD DETAIL. ALL CATCH BASINS AND INLETS SHALL BE WATER-TIGHT AT ALL POINTS BELOW GRADE. ALL VISIBLE LEAKS SHALL BE SEALED IN A MANNER ACCEPTABLE TO THE CITY ENGINEER. CATCH BASINS AND INLETS SHALL BE FURNISHED WITH A FRAME AND GRATE BASED UPON THE LOCATION OF THE INSTALLATION AS LISTED BELOW. ALL FRAMES AND GRATES SHALL MEET OR EXCEED ASSHTO H-20 LOADING SPECIFICATIONS. FRAMES SHALL BE SHOT PAINTED WITH ASPHALTIC BASE PAINT.
   - 10.1. PAVEMENT: EAST JORDAN IRON WORKS 1022 FRAME WITH TYPE M1 RADIAL FLAT GRATE, OR APPROVED EQUAL.
   - 10.2. BARRIER CURB AND GUTTER: EAST JORDAN IRON WORKS 7220 FRAME WITH TYPE M1 GRATE AND T1 CURB BOX, OR APPROVED EQUAL.
   - 10.3. DEPRESSED CURB: EAST JORDAN IRON WORKS 5120 FRAME AND GRATE , OR APPROVED EQUAL.
   - 10.4. MOUNTABLE: EAST JORDAN IRON WORKS 7525 FRAME AND GRATE, OR APPROVED EQUAL.
   - 10.5. NON-PAVED AREAS: EAST JORDAN IRON WORKS 6527 BEEHIVE GRATE, OR APPROVED EQUAL. ALTERNATELY, IN AREAS WHERE THERE IS THE LIKELIHOOD OF PEDESTRIAN TRAFFIC, EAST JORDAN IRON WORKS 1022 FRAME WITH TYPE M1 RADIAL FLAT GRATE, OR APPROVED EQUAL MAY BE USED.
11. THE STEEL CASING PIPE SHALL BE BITUMINOUS COATED. A MINIMUM OF 30 MILS THICKNESS INSIDE AND OUT, AND SHALL BE OF LEAK PROOF CONSTRUCTION, CAPABLE OF WITHSTANDING THE ANTICIPATED LOADINGS. SEE TABLE 200-1 IN THE NAPERVILLE STANDARD SPECIFICATIONS FOR THE MINIM WALL THICKNESS OF VARIOUS STEEL CASING DIAMETERS. THE STEEL CASING PIPE SHALL HAVE A MINIMUM YIELD STRENGTH OF 35,000 PSI AND SHALL MEET THE REQUIREMENTS OF A139/A139M-04 (OR LATEST EDITION), GRADE B. RING DEFLECTION SHALL NOT EXCEED 2% OF THE NOMINAL DIAMETER. THE STEEL CASING PIPE SHALL BE DELIVERED TO THE JOBSITE WITH BEVELED END TO FACILITATE FIELD WELDING.
12. ALL PIPE SHALL BE LAID TRUE TO LINE AND GRADE. DIRT AND OTHER FOREIGN MATERIAL SHALL BE PREVENTED FROM ENTERING THE PIPE OR PIPE JOINT DURING HANDLING OR LAYING OPERATIONS. ALL STORM SEWER PIPE TO PIPE CONNECTIONS SHALL BE SEALED WITH BUTYL MASTIC TO ENSURE WATER TIGHTNESS. LIGHT HOLES TO BE SEALED USING BUTYL MASTIC AND CONCRETE PLUGS. AT NO TIME SHALL CONNECTIONS BETWEEN THE STORM SEWER AND SANITARY SEWER BE ALLOWED.
13. FOR STRUCTURES LOCATED IN PAVED AREAS, A MINIMUM OF FOUR, 2-INCH DIAMETER HOLES SHALL BE DRILLED OR PRECAST INTO THE STRUCTURE WITH 1 FOOT OF THE LOWEST PIPE INVERT. THE HOLES SHALL BE DISTRIBUTED EQUIDISTANT AROUND THE PERIMETER OF THE STRUCTURE. A 1-FOOT BY 1-FOOT SECTION OF UNDERDRAIN FILTER CLOTH MATERIAL SHALL BE SUFFICIENTLY FIXED TO THE OUTSIDE OF THE MANHOLE WITH MASTIC MATERIAL TO PREVENT SLIPPAGE DURING BACKFILLING.
14. ADJUSTMENTS MAY BE NECESSARY TO ENSURE THAT FRAMES AND GRATES MATCH THE ELEVATION OF THE SURROUNDING PAVEMENT OR GROUND SURFACE. PREFORMED ADJUSTING RINGS OF THE PROPER DIMENSIONS NEEDED TO MATE THE FRAME TO THE PRECAST STRUCTURE SHALL BE USED. NO MORE THAN 12 INCHES OF VERTICAL ADJUSTMENT MAY BE MADE USING THE MINIMUM PRACTICAL NUMBER OF INDIVIDUAL RINGS. ALL RINGS SHALL BE HIGH DENSITY POLYETHYLENE PLASTIC (HDPE), RECYCLED RUBBER, HIGH DENSITY EXPANDING POLYSTYRENE, EXPANDED POLYPROPYLENE (EPP), OR OTHER MATERIAL AS APPROVED BY THE CITY ENGINEER. PRECAST CONCRETE RINGS, BRICKS, ROCKS, SHIMS, OR CONCRETE BLOCKS WILL NOT BE ALLOWED. TAPERED ADJUSTING RINGS SHALL BE REQUIRED WHEN THE FRAME WILL NEED TO MATCH THE SLOPE OF THE ROADWAY. A RESILIENT, FLEXIBLE, NON-HARDENING, PREFORMED BITUMINOUS MASTIC MATERIAL, CONSEAL 102 B OR APPROVED EQUAL, SHALL BE USED BETWEEN THE CONE OR TOP BARREL SECTION OF THE STRUCTURE AND THE ADJUSTING RINGS. A THICK BEAD OF NON-HARDENING ELASTOMERIC JOINT SEALANT CONFORMING TO ASTM C-920, TYPE S, GRADE NS, SHALL BE APPLIED BETWEEN ALL INDIVIDUAL RINGS, AND BETWEEN THE ADJUSTING RINGS AND THE FRAME. THE SEALANT OR MASTIC MATERIAL SHALL BE APPLIED IN SUCH A MANNER THAT NO SURFACE WATER OR GROUND WATER INFLOW CAN ENTER THE STRUCTURE. ALL STORM SEWER STRUCTURE FRAMES WITHOUT INSIDE FLANGES SHALL BE SHAPED WITH HYD

WATER/UTILITES GENERAL NOTES

A. NEW WATER MAIN VALVES, INCLUDING PRESSURE TAP VALVES, ADJACENT TO AN EXISTING WATER MAIN, AND EXISTING WATER MAIN VALVES SHALL ONLY BE OPERATED BY THE CITY OF NAPERVILLE, DEPARTMENT OF PUBLIC UTILITIES CEE/CM DIVISION PERSONNEL WITH 48-HOUR NOTICE (MONDAY-FRIDAY). CONTACT NAPERVILLE TED BUSINESS GROUP AT 630-420-6082 FOR SCHEDULING.

B. ANY EXISTING UTILITY STRUCTURES REQUIRING ADJUSTMENT OR RECONSTRUCTION SHALL BE COMPLETED BY THE CONTRACTOR TO THE SATISFACTION OF THE UTILITY OWNER. ADJUSTMENTS AND/OR RECONSTRUCTIONS NOT CALLED FOR ON THE PLANS SHALL BE CONSIDERED INCIDENTAL TO THE CONTRACT. NO MORE THAN A TOTAL OF 12 INCHES OF ADJUSTING RINGS AND/OR 2 ADJUSTING RINGS SHALL BE ALLOWED. ALL STRUCTURE FRAMES SHALL BE FLUSH WITH FINAL GRADE.

C. TREES SHALL BE INSTALLED A MINIMUM OF FIVE (5) FEET HORIZONTALLY FROM UNDERGROUND ELECTRICAL FEEDERS, SANITARY SEWERS, SANITARY SERVICES, WATER MAINS, AND WATER SERVICES. TREES SHALL BE INSTALLED A MINIMUM OF TEN (10) FEET HORIZONTALLY FROM UTILITY STRUCTURES AND APPURTENANCES, INCLUDING, BUT NOT LIMITED TO, MANHOLES, VALVE VAULTS, VALVE BOXES AND FIRE HYDRANTS. NO TREES, SHRUBS OR OBSTACLES WILL BE ALLOWED 10' IN FRONT OF, 5' ON THE SIDES, AND 7' TO THE REAR OF THE ELECTRICAL TRANSFORMER.

D. ALL RETAINER GLANDS WHEN REQUIRED TO RESTRAIN VALVES, FITTINGS, HYDRANTS, AND PIPE JOINTS SHALL BE MECHANICAL JOINT WEDGE ACTION TYPE MEGALUG 1100 SERIES AS MANUFACTURED BY EBBA IRON, INC. OR UNI-FLANGE BLOCKBUSTER 1400 SERIES AS MANUFACTURED BY FORD METER BOX CO, AND SHALL BE FOR USE ON DUCTILE IRON PIPE CONFORMING TO ANSI/AWWA C151/A21.51, FOR NOMINAL PIPE SIZES 3" THROUGH 48".

E. EXISTING DUCTILE IRON SYSTEMS FOR RESTRAINING PUSH-ON PIPE BELLS SHALL BE MEGALUG SERIES 1100HD OR FORD SERIES 1390.

F. EXISTING DUCTILE IRON SYSTEMS REQUIRING RESTRAINT SHALL BE MEGALUG SERIES 1100SD (SPLIT MEGALUG) FOR MECHANICAL JOINTS.

G. DUCTILE IRON WATER MAIN TO BE CLASS 52. ALL DUCTILE IRON PIPE IS TO BE ENCASED IN POLYETHYLENE FILM. POLYETHYLENE ENCASEMENT TO BE INSTALLED IN ACCORDANCE WITH ANSI/AWWA C105/A21.5-05.

H. A SET OF AS-BUILT RECORD DRAWING SHALL BE GIVEN TO THE CITY OF NAPERVILLE UPON COMPLETION OF IMPROVEMENTS SHOWING THE ELEVATION AND LOCATION (TIED TO TWO POINTS) OF ALL NEW AND EXISTING STRUCTURES INCLUDING FIRE HYDRANTS, VALVE BOXES AND VAULTS, LINESTOP SLEEVES, WATER SERVICE CORPORATION STOPS, WATER MAIN FITTINGS/BENDS, MANHOLES, SANITARY SERVICE WYES (MEASURED FROM DOWNSTREAM MANHOLE), AND ABANDONED WATER OR SANITARY SERVICE LINES. ALL ELEVATIONS SHOULD BE REFERENCED TO THE SAME BENCHMARK DATUM AS THE ORIGINAL DESIGN PLANS. HORIZONTAL TIES SHALL BE REFERENCED TO LOT LINES, BACK OF CURB, OR PROPERTY CORNERS.

I. ALL SANITARY SEWER PIPING SHALL BE PVC PIPE MEETING THE REQUIREMENTS OF ASTM D-2241 WITH JOINTS CONFORMING TO ASTM D-3139. ALL SANITARY SEWER FITTINGS SHALL BE PVC MEETING THE FOLLOWING REQUIREMENTS: 4" TO 12" SHALL BE INJECTION MOLDED FITTINGS MEETING ASTM D-2241. GREATER THAN 12" SHALL BE FABRICATED FITTINGS MEETING ASTM D-2241 OR C905. MINIMUM PRESSURE RATING SHALL BE 150 PSI.

J. THE VALVES LESS THAN 16" SHALL BE STANDARD PATTERN, GATE VALVES AND SHALL HAVE THE NAME OR MARK OF THE MANUFACTURER, SIZE AND WORKING PRESSURE PLAINLY CAST IN RAISED LETTERS ON THE VALVE BODY. VALVES MAY BE APPROVED FROM ONE OF THE FOLLOWING MANUFACTURERS: AMERICAN, CLOW, WATEROUS OR KENNEDY.

K. STAINLESS STEEL NUTS, BOLTS/T-BOLTS, AND WASHERS, TYPE 304 OR BETTER, WILL BE REQUIRED ON ALL WATER MAIN INSTALLATIONS. THIS WOULD APPLY TO HYDRANTS, TAPPING SLEEVES, VALVES, FITTINGS, RESTRAINT, AND OTHER APPURTENANCES BURIED OR IN VALVE VAULTS. MECHANICAL JOINTS AND RESTRAINT GLANDS REQUIRE 304 STAINLESS STEEL T-BOLTS. AN ANTI-SEIZE COMPOUND SHALL BE FACTORY APPLIED TO NUTS OR BOLTS – ANY DAMAGE TO THIS COATING SHALL BE REPAIR WITH FIELD APPLIED APPROVED ANTI-SEIZE COMPOUND THAT IS A MOLYBDENUM-BASE LUBRICANT, BOSTIK NEVER-SEEZ OR APPROVED EQUAL.

L. THE CONTRACTOR SHALL ROTATE AND/OR ADJUST ANY EXISTING AND/OR NEW HYDRANT TO THE SATISFACTION OF THE DEPARTMENT OF PUBLIC UTILITIES.

M. WATER MAINS SHALL BE SUBJECTED TO A HYDROSTATIC/LEAKAGE TEST IN ACCORDANCE WITH NAPERVILLE STANDARD SPECIFICATIONS. TEST PRESSURE SHALL BE NO LESS THAN 150 PSI FOR A PERIOD OF 4 HOURS AND NOT VARY BY MORE THAN + 5 PSI, DURING THE TEST. THE TEST GAUGE SHALL BE APPROVED BY THE CITY AND SHALL BE GLYCERIN OR OIL FILLED, WITH A RANGE OF NOT MORE THAN 200 PSI AND INCREMENTS NOT GREATER THAN 5 PSI. 4 " MINIMUM DIAL SIZE. WATER RECOVERY TEST SHALL BE COMPLETED AT THE END OF THE TESTING PERIOD TO SHOW ACTUAL LEAKING AND THAT THE WATER MAIN DID NOT HAVE TOO MUCH TRAPPED AIR IN THE TESTED SECTION.

N. THE CITY OF NAPERVILLE PUBLIC UTILITIES DOES NOT GUARANTEE THAT ANY VALVE OR FITTING IN THE EXISTING WATER DISTRIBUTION SYSTEM WILL HOLD AGAINST A HYDROSTATIC/LEAKAGE TEST. THE CONTRACTOR IS SOLELY RESPONSIBLE FOR PROVIDING AND ACCEPTABLE PRESSURE TEST WHICH SHALL INCLUDE PROVISIONS AROUND EXISTING VALVES AND FITTINGS.

O. FIRE HYDRANT SHOULD BE BAGGED "NOT IN SERVICE" UNTIL ALL TESTING AND DISINFECTION HAS BEEN COMPLETED AND NEW WATER MAIN SECTION IS SERVICE.

P. SANITARY SEWER AND WATER SHALL BE CONSTRUCTED, TESTED, AND PLACED INTO SERVICE IN ACCORDANCE WITH CITY OF NAPERVILLE STANDARD SPECIFICATION AND SPECIFICATIONS FOR WATER AND SEWER MAIN CONSTRUCTION IN ILLINOIS, LATEST EDITION.

Q. ALL VALVE BOXES, VAULTS, HYDRANTS, AND MANHOLES SHALL NOT BE COVERED WITH CONSTRUCTION DEBRIS AND SHALL REMAIN ACCESSIBLE TO THE RESPECTIVE UTILITY COMPANY.

R. WATER SERVICE LINE SMALLER THAN 3" SHALL BE TYPE K COPPER. IF JOINTS ARE REQUIRED DUE TO LENGTH OF SERVICE, THEN ONLY COMPRESSION TYPE COUPLING SHALL BE PERMITTED. NO SOLDERED OR FLARED TYPE JOINTS ARE ALLOWED.

S. ALL SANITARY MANHOLES SHALL BE TESTED FOR LEAKAGE BY VACUUM TESTING. THE MANHOLE FRAME AND ADJUSTING RINGS SHALL BE IN PLACE WHEN TESTING. ANY LEAKS SHALL BE REPAIRED FROM EXTERIOR OF MANHOLE – PATCHING INSIDE OF MANHOLE SHALL NOT BE ACCEPTABLE. A VACUUM OF 10" (254 MM) HG SHALL BE PLACE ON THE MANHOLE AND THE TIME SHALL BE MEASURED FOR THE VACUUM TO DROP TO 9" (229 MM) HG. THE VACUUM SHALL NOT DROP BELOW 9" (229 MM) HG FOR THE FOLLOWING TIME PERIODS FOR EACH SIZE OF MANHOLE:
A)48-INCH DIAMETER - 60 SECONDS
B)60-INCH DIAMETER - 75 SECONDS
C)72-INCH DIAMETER - 90 SECONDS
D)84-INCH DIAMETER - 105 SECONDS
ANY MANHOLES THAT FAIL THE TEST SHALL BE SEALED AND RE-TESTED UNTIL ACCEPTABLE.

T. THE CONTRACTOR SHALL PROVIDE INTERNAL TELEVISED INSPECTION OF ALL INSTALLED SANITARY SEWER, LATERALS, MANHOLES AND CONNECTIONS TO THE PUBLIC SYSTEM. FOLLOWING COMPLETION OF TELEVISING WORK, THE CONTRACTOR SHALL SUBMIT VIDEO RECORDINGS ON DVD OR FLASH DRIVE ALONG WITH A COMPREHENSIVE TELEVISING REPORT WHICH WILL INDICATE THE LOCATION, FOOTAGES AND NATURE OF ANY DEFECTS. PRIOR TO FINAL ACCEPTANCE, THESE DEFECTS SHALL BE REPAIRED TO THE SATISFACTION OF THE WATER/WASTEWATER UTILITY AND RE-TELEVISED.

U. CONTRACTOR WORK HOURS ARE ONLY ALLOWED FROM 7:00 A.M. TO 5:00 P.M., MONDAY THROUGH SATURDAY. NO WORK SHALL BE PERMITTED ON SUNDAYS.

V. SANITARY PIPES WITH LESS THAN 4 FEET OR MORE THAN 25 FEET OF COVER SHALL BE CONSTRUCTED OF DUCTILE IRON PIPING (CLASS 50, MINIMUM) AND ENCASED IN POLYWRAP.

W. ALL EXCAVATIONS MORE THAN 20 FEET DEEP MUST BE PROTECTED BY A SYSTEM DESIGNED BY A REGISTERED PROFESSIONAL ENGINEER.

X. CONTRACTOR SHALL MAINTAIN 2' MINIMUM CLEARANCE BETWEEN EXISTING UTILITIES AND NEW FOUNDATIONS AND UNDERGROUND FACILITIES. IN AREAS WHERE FOUNDATIONS AND UNDERGROUND FACILITIES ARE PROPOSED ADJACENT TO EXISTING UTILITIES, THE CONTRACTOR SHALL POT HOLE BY VACUUM EXCAVATION OR HAND EXCAVATION TO LOCATE THE EXISTING UTILITY TO VERIFY MINIMUM CLEARANCE REQUIREMENT.

Y. FENCES SHALL BE INSTALLED A MINIMUM OF 5 FEET FROM ANY WATER OR SANITARY MAINS WHEN RUNNING PARALLEL WITH THEM. WHERE FENCES ARE INSTALLED CROSSING WATER OR SANITARY MAINS, THE POSTS SHALL BE LOCATED TO HAVE THE MAIN BETWEEN THEM.

Z. ALL BRASS COMPONENTS SHALL BE CERTIFIED TO BE LEAD FREE IN COMPLIANCE WITH NSF 61 AND NSF 372 AND IDENTIFIED WITH APPLICABLE MARKINGS.

OTHER WATER MAIN NOTES

1. ALL WATERMAINS SHALL BE INSTALLED IN A MANNER MEETING OR EXCEEDING THE REQUIRED STANDARD SPECIFICATIONS CONTAINED IN THE "STANDARD SPECIFICATIONS FOR WATER AND SEWER MAIN CONSTRUCTION IN ILLINOIS", THE CURRENT EDITION.

2. WATERMAIN SHALL BE CONSTRUCTED OF DUCTILE IRON PIPE CLASS 52 (AWWA-C151) WITH CEMENT MORTAR LINING AND SEAL COATING (AWWA-C104), THE JOINTS SHALL BE RUBBER GASKET PUSH-ON OR MECHANICAL. WATERMAIN FITTINGS SHALL BE OF DUCTILE IRON WITH CEMENT MORTAR LINING AND SEAL COATING WITH MECHANICAL JOINTS AND SHALL CONFORM TO AWWA-C110.

3. ALL PIPE AND FITTINGS SHALL BE MANUFACTURED IN THE UNITED STATES.

4. THE WATERMAIN SHALL BE TAPPED, TESTED, AND DISINFECTED WITH MUNICIPAL REPRESENTATIVES PRESENT. HYDROSTATIC TESTING WILL BE DONE IN ACCORDANCE W/AWWA STANDARD; ANSI/AWWA C600-99 SEC.5.2. CHLORINATION/STERILIZATION TESTING SHALL BE IN ACCORDANCE WITH AWWA STANDARD; ANSI/AWWA C 651, LATEST EDITION

5. MINIMUM COVER ON ALL WATER MAIN AND SERVICES SHALL BE 5.5 FEET.

6. WATER MAIN HORIZONTAL SEPARATION:
6.1. WATER MAINS SHALL BE LAID AT LEAST 10 FEET HORIZONTALLY FROM ANY EXISTING OR PROPOSED DRAIN, STORM SEWER, SANITARY SEWER, OR SEWER SERVICE.
6.2. WATER MAINS MAY BE LAID CLOSER THAN 10 FEET FORM A SEWER WHEN:
6.2.1. LOCAL CONDITIONS PREVENT A LATERAL SEPARATION OF 10 FEET.
6.2.2. THE WATER MAIN IS AT LEAST 18 INCHES ABOVE THE CROWN OF THE SEWER; AND
6.2.3. THE WATER MAIN IS EITHER IN A SEPARATE TRENCH OR IN THE SAME TRENCH ON AN UNDISTURBED SHELF LOCATED TO ONE SIDE OF THE SEWER.
6.3. BOTH THE WATER MAIN AND SEWER SHALL BE CONSTRUCTED OF SLIP-ON (ANSI A21.11) JOINT DUCTILE IRON PIPE, OR PVC PIPE MEETING THE REQUIREMENTS OF SECTION 40-2 OF THE ISPE STANDARDS IN ILLINOIS WHEN IT IS IMPOSSIBLE TO MEET (A) OR (B) ABOVE, THE DRAIN OR SEWER SHALL BE TESTED TO THE MAXIMUM EXPECTED SURCHARGE HEAD BEFORE BACKFILLING.

7. WATER MAIN VERTICAL SEPARATION:
7.1. WHERE WATER MAINS CROSS ABOVE A SEWER/DRAIN WITH GREATER THAN 18 INCHES VERTICAL SEPARATION, A FULL LENGTH OF WATER MAIN PIPE SHALL BE CENTERED OVER THE SEWER TO BE CROSSED, WITH JOINTS EQUIDISTANT FROM THE SEWER.
7.2. WHERE WATER MAINS CROSS BELOW A SEWER/DRAIN (WITH 18 INCHES SEPARATION), OR CROSS ABOVE A SEWER/DRAIN WITH LESS THAN 18 INCHES SEPARATION), ONE OF THE FOLLOWING METHODS TO PROTECT THE WATER MAIN SHALL BE UTILIZED:
7.2.1. CONSTRUCT SEWER/DRAIN OF DUCTILE IRON PIPE (ANSI A21.11 JOINTS), PVC (ASTM D-2241, SDR 26), OR RCP WITH O-RING (ASTM D-443) JOINTS (FOR STORM SEWER ONLY).
7.2.2. ENCASE THE SEWER IN PVC (ASTM D-2241, SDR 26).
7.2.3. ENCASE THE WATER MAIN IN PVC (ASTM D-2241, SDR 26) CONSTRUCTION OF PROTECTION SHALL EXTEND 10 FEET PERPENDICULAR TO THE SEWER ON EACH SIDE OF THE SEWER. THE ENDS OF THE ENCASEMENT SHALL BE SEALED.
7.3. WATER MAINS SHALL NOT CROSS BELOW A SEWER/DRAIN WITH LESS THEN 18" VERTICAL SEPARATION.
7.4. THE PORTION OF THE TRENCH ABOVE THE INITIAL BACKFILL OF THE LOWER UTILITY AND THE INVERT OF THE HIGHER UTILITY SHALL BE FILLED WITH COMPACTED SELECT EXCAVATED MATERIAL (ASTM D-2321, CLASS IV).

8. VALVES, PRESSURE CONNECTIONS, AND TRENCH BACKFILL SHALL CONFORM TO THE CONSTRUCTION DETAILS.

9. WATER MAINS, JOINTS, FITTINGS AND HYDRANTS NEED TO BE POLYETHYLENE WRAPPED PER THE CITY OF NAPERVILLE REQUIREMENTS.

NAPER SETTLEMENT

Wight
Wight & Company
wightco.com
2500 North Frontage Road
Darien, IL 60561
P 630.969.7000
F 630.969.7979

REV	DESCRIPTION	DATE
	ISSUED FOR RESUBMITTAL	10-23-20
	ISSUED FOR PERMIT	09-08-20

NAPER SETTLEMENT
INNOVATION
GATEWAY
& AG CENTER

523 S. WEBSTER STREET
NAPERVILLE, IL 60540

GENERAL NOTES

Project Number:
200081
Drawn By:
SC
Sheet:
C0.02

S:\Darien\Naper Settlement\200081_PUD Major Change Process\01\11 Drawings\02 CD\C0.01 GENERAL NOTES.dwg schen Oct 23, 2020 10:33:22 am
Wight © Copyright All rights reserved. No part of these documents may be reproduced, stored, or transmitted in any form or by any means, electronic, mechanical, photocopying, recording or otherwise, without the prior written consent of Wight.

LEGEND

REMOVE FENCE WITH POLES

PROJECT AREA

NAPER SETTLEMENT

Wight

Wight & Company
wightco.com

2500 North Frontage Road
Darien, IL 60561

P 630.969.7000
F 630.969.7979

REV	DESCRIPTION	DATE
	ISSUED FOR RESUBMITTAL	10-23-20
	ISSUED FOR PERMIT	09-08-20

NAPER SETTLEMENT INNOVATION GATEWAY & AG CENTER

523 S. WEBSTER STREET
NAPERVILLE, IL 60540

OVERALL EXISTING CONDITIONS

Project Number:
200081

Drawn By:
SC

Sheet:
C1.00

S:\Darien\Naper Settlement\200081_PUD Major Change Process\01\11 Drawings\02 CD\C1.00 EXISTING CONDITIONS PLAN.dwg schen Oct 23, 2020 10:33:33 am

Wight © Copyright All rights reserved. No part of these documents may be reproduced, stored, or transmitted in any form or by any means, electronic, mechanical, photocopying, recording or otherwise, without the prior written consent of Wight.

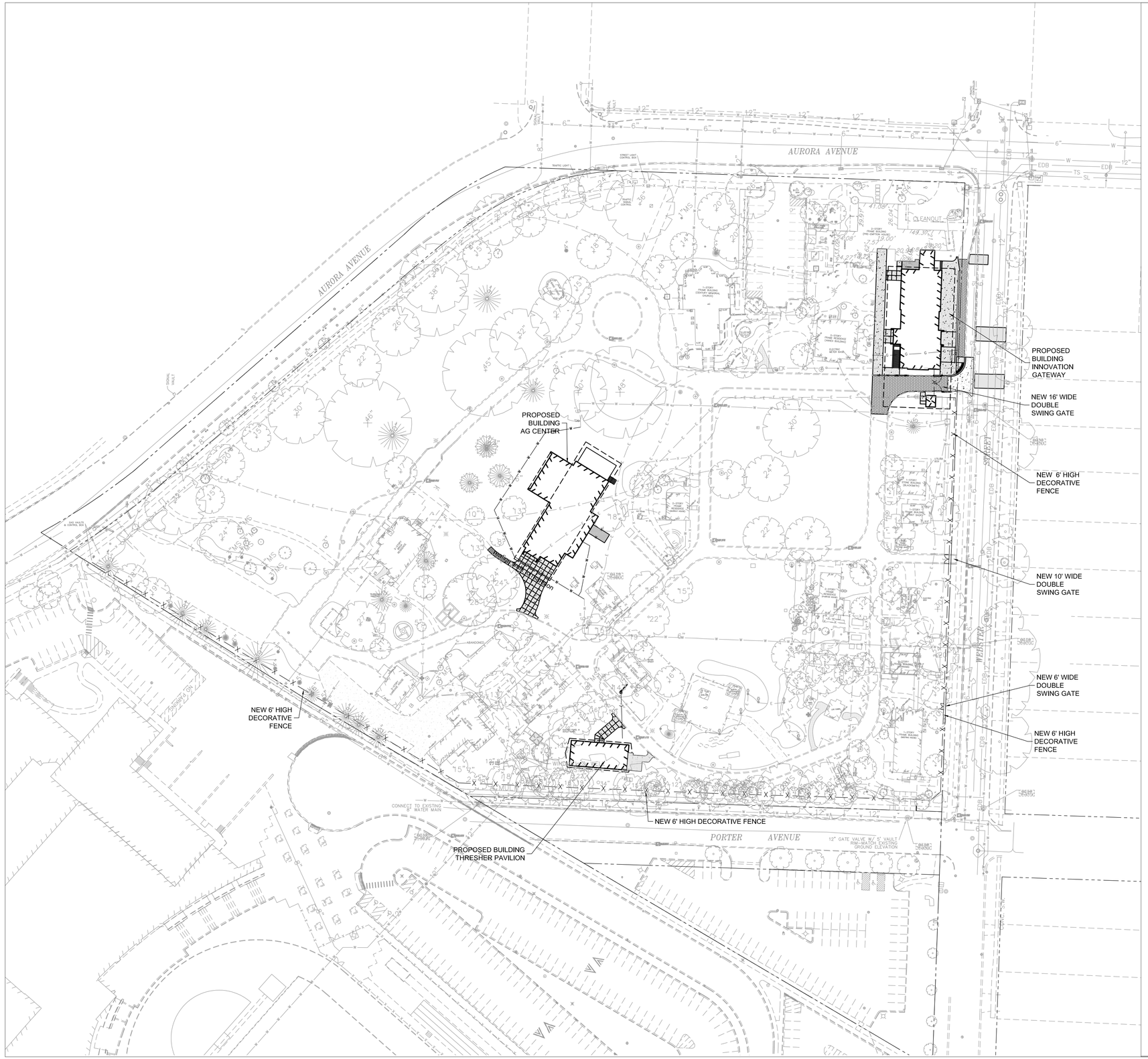

LEGEND

- CONCRETE SEATWALL
- PCC SIDEWALK AND STONE BASE
- HEAVY DUTY PCC SIDEWALK AND STONE BASE
- BRICK PAVER
- PROPERTY BUILDING
- PROPERTY BUILDING OVERHANG
- PROPOSED 6' HIGH DECORATIVE FENCE
- PROPERTY LINE

NAPER SETTLEMENT

Wight

Wight & Company
wightco.com

2500 North Frontage Road
Darien, IL 60561

P 630.969.7000
F 630.969.7979

REV	DESCRIPTION	DATE
	ISSUED FOR RESUBMITTAL	10-23-20
	ISSUED FOR PERMIT	09-08-20

NAPER SETTLEMENT INNOVATION GATEWAY & AG CENTER

523 S. WEBSTER STREET
NAPERVILLE, IL 60540

OVERALL SITE PLAN

Project Number:
200081

Drawn By:
SC

Sheet:
C2.00

S:\Darien\Naper Settlement\200081_PUD Major Change Process\01\11 Drawings\02 CD\C2.00 OVERALL SITE PLAN.dwg schen Oct 23, 2020 10:34:07 am

Wight © Copyright All rights reserved. No part of these documents may be reproduced, stored, or transmitted in any form or by any means, electronic, mechanical, photocopying, recording or otherwise, without the prior written consent of Wight.

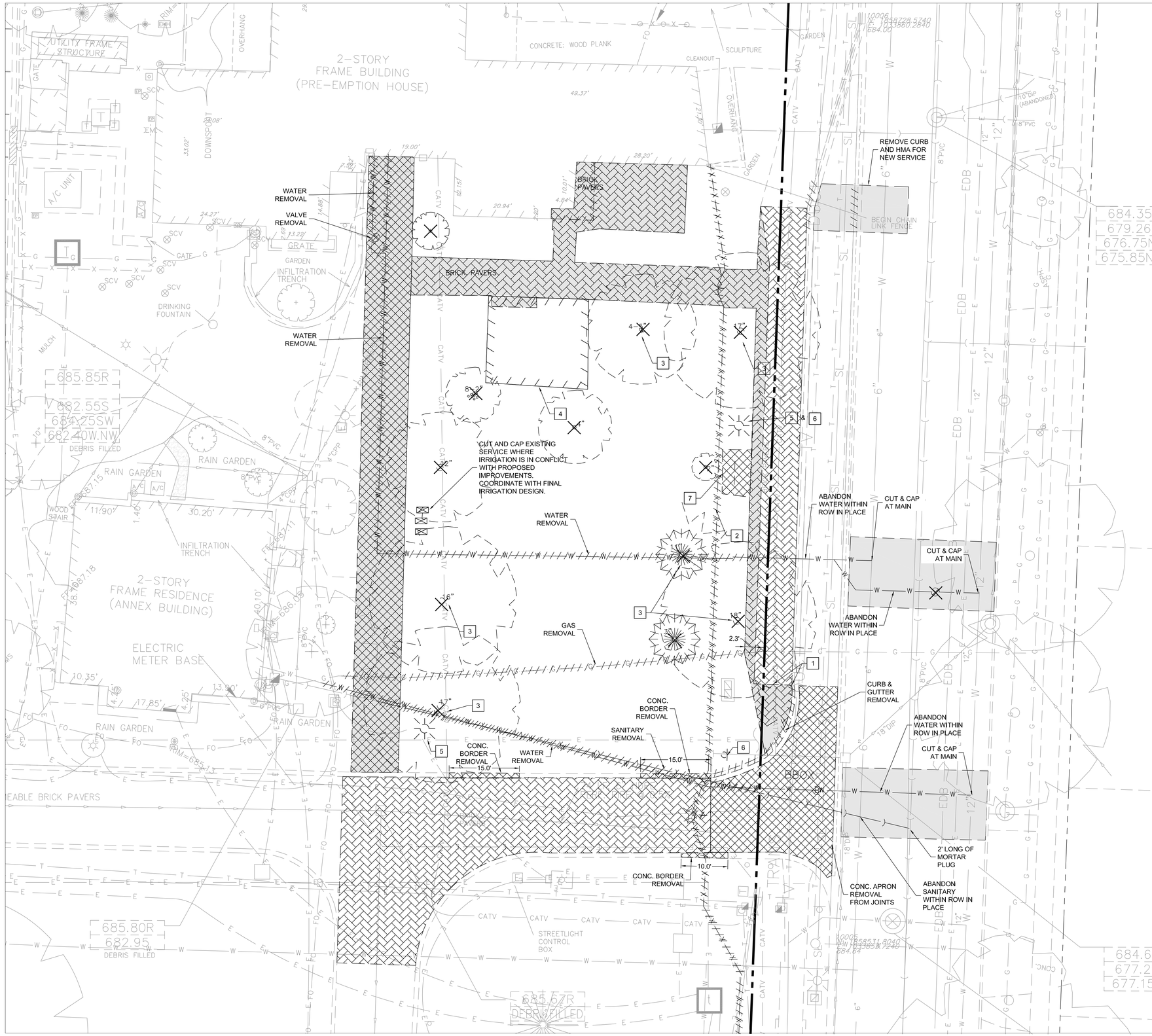

LEGEND

- ITEM REMOVAL
- LINEAR ITEM REMOVAL
- BRICK PAVER AND STONE BASE REMOVAL (SALVAGE BRICKS)
- CONCRETE AND STONE BASE REMOVAL
- BRICK PAVER REMOVAL AND REINSTALLED ON EXISTING STONE BASE
- CONCRETE REMOVAL ON EXISTING STONE BASE
- HMA AND STONE BASE REMOVAL

DEMO KEY NOTES

1. SAWCUT
2. REMOVE FENCE WITH POLE
3. REMOVE TREE
4. REMOVE BUILDING/FOUNDATION AND APPURTENANCES SEE ARCH PLANS
5. RELOCATE LIGHT POLE
6. RELOCATE SIGN
7. REMOVE BIKE RACK
8. RELOCATE FIRE HYDRANT

DEMOLITION NOTES

1. CONTRACTOR TO PROTECT ALL EXISTING UTILITIES DURING DEMOLITION & CONSTRUCTION ACTIVITIES, WHETHER SHOWN ON THE PLANS OR NOT, UNLESS OTHERWISE SPECIFIED. ANY RELOCATION, ADJUSTMENTS, CONFLICTS, ETC. SHALL BE BROUGHT TO THE ENGINEER'S ATTENTION IMMEDIATELY. CONTRACTOR TO LOCATE ALL PUBLIC & PRIVATE UTILITIES IN THE RIGHT-OF-WAY AND SITE PRIOR TO CONSTRUCTION.
2. ALL EXISTING CURB TO REMAIN UNLESS OTHERWISE SPECIFIED. ANY CURB DAMAGED DURING DEMOLITION SHALL BE REPLACED IN KIND.
3. ALL EXISTING SIGNS & LIGHT POLES TO REMAIN AND BE PROTECTED UNLESS OTHERWISE SPECIFIED. ANY SIGNS REMOVED SHALL BE SALVAGED AND RELOCATED OR RETURNED TO OWNER.
4. ANY UTILITY ADJUSTMENTS, CONFLICTS, RELOCATIONS, ETC. REQUIRED SHALL BE COORDINATED WITH ENGINEER AND UTILITY OWNER/PROVIDER.
5. ALL EXISTING TREES TO REMAIN AND TO BE PROTECTED UNLESS OTHERWISE SPECIFIED.
6. ALL DEMOLITION AND CONSTRUCTION IN THE RIGHT-OF-WAY SHALL BE COORDINATED AND APPROVED BY THE CITY OF NAPERVILLE. THE CONTRACTOR IS TO CONTACT THE INSPECTORS AT THE CITY OF NAPERVILLE PRIOR TO CONSTRUCTION.
7. COORDINATE ALL ELECTRICAL, CABLE FIBER, ETC., REMOVAL/RELOCATION WITH MEP PLANS. CONTRACTOR SHALL PROTECT ALL EXISTING ELECTRIC SERVICES DURING CONSTRUCTION AND NOTIFY ENGINEER IMMEDIATELY OF ANY CONFLICTS.
8. ALL EXISTING SHRUBS AND LANDSCAPING IN CONFLICT WITH SITE IMPROVEMENTS SHALL BE REMOVED.
9. THE CONTRACTOR WILL BE RESPONSIBLE FOR THE REPLACEMENT OF ANY DAMAGED PUBLIC/PRIVATE PROPERTY OR ROADWAY AS A RESULT OF CONSTRUCTION ON THIS SITE. THE RIGHT-OF-WAY MUST BE RESTORED TO EXISTING OR BETTER CONDITION.

NAPER SETTLEMENT

Wight

Wight & Company
wightco.com

2500 North Frontage Road
Darien, IL 60561

P 630.969.7000
F 630.969.7979

REV	DESCRIPTION	DATE
	ISSUED FOR RESUBMITTAL	10-23-20
	ISSUED FOR PERMIT	09-08-20

NAPER SETTLEMENT
INNOVATION GATEWAY
& AG CENTER

523 S. WEBSTER STREET
NAPERVILLE, IL 60540

DEMOLITION PLAN
INNOVATION GATEWAY

Project Number:
200081

Drawn By:
SC

Sheet:
C1.01

S:\Darien\Naper Settlement\200081_PUD Major Change Process\01\11 Drawings\02 CD\C1.01 – C1.03 DEMOLITION PLAN.dwg schen Oct 23, 2020 10:52:25 am
Wight © Copyright All rights reserved. No part of these documents may be reproduced, stored, or transmitted in any form or by any means, electronic, mechanical, photocopying, recording or otherwise, without the prior written consent of Wight.

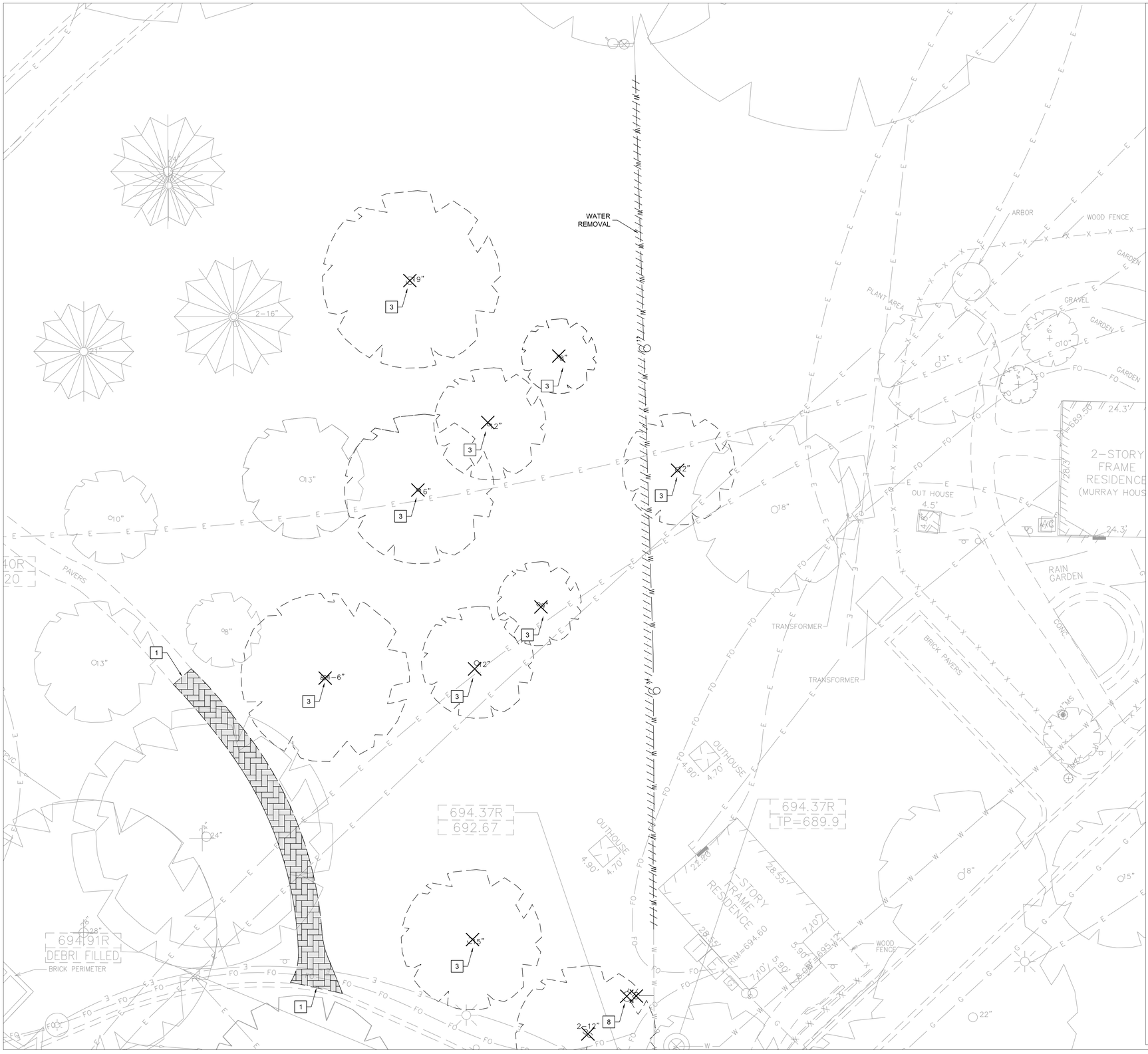

LEGEND

- ITEM REMOVAL
- LINEAR ITEM REMOVAL
- BRICK PAVER AND STONE BASE REMOVAL (SALVAGE BRICKS)
- CONCRETE AND STONE BASE REMOVAL
- BRICK PAVER REMOVAL AND REINSTALLED ON EXISTING STONE BASE
- CONCRETE REMOVAL ON EXISTING STONE BASE
- HMA AND STONE BASE REMOVAL

DEMO KEY NOTES

1. SAWCUT
2. REMOVE FENCE WITH POLE
3. REMOVE TREE
4. REMOVE BUILDING/FOUNDATION AND APPURTENANCES SEE ARCH PLANS
5. RELOCATE LIGHT POLE
6. RELOCATE SIGN
7. REMOVE BIKE RACK
8. RELOCATE FIRE HYDRANT

DEMOLITION NOTES

1. CONTRACTOR TO PROTECT ALL EXISTING UTILITIES DURING DEMOLITION & CONSTRUCTION ACTIVITIES, WHETHER SHOWN ON THE PLANS OR NOT, UNLESS OTHERWISE SPECIFIED. ANY RELOCATION, ADJUSTMENTS, CONFLICTS, ETC. SHALL BE BROUGHT TO THE ENGINEER'S ATTENTION IMMEDIATELY. CONTRACTOR TO LOCATE ALL PUBLIC & PRIVATE UTILITIES IN THE RIGHT-OF-WAY AND SITE PRIOR TO CONSTRUCTION.
2. ALL EXISTING CURB TO REMAIN UNLESS OTHERWISE SPECIFIED. ANY CURB DAMAGED DURING DEMOLITION SHALL BE REPLACED IN KIND.
3. ALL EXISTING SIGNS & LIGHT POLES TO REMAIN AND BE PROTECTED UNLESS OTHERWISE SPECIFIED. ANY SIGNS REMOVED SHALL BE SALVAGED AND RELOCATED OR RETURNED TO OWNER.
4. ANY UTILITY ADJUSTMENTS, CONFLICTS, RELOCATIONS, ETC. REQUIRED SHALL BE COORDINATED WITH ENGINEER AND UTILITY OWNER/PROVIDER.
5. ALL EXISTING TREES TO REMAIN AND TO BE PROTECTED UNLESS OTHERWISE SPECIFIED.
6. ALL DEMOLITION AND CONSTRUCTION IN THE RIGHT-OF-WAY SHALL BE COORDINATED AND APPROVED BY THE CITY OF NAPERVILLE. THE CONTRACTOR IS TO CONTACT THE INSPECTORS AT THE CITY OF NAPERVILLE PRIOR TO CONSTRUCTION.
7. COORDINATE ALL ELECTRICAL, CABLE FIBER, ETC., REMOVAL/RELOCATION WITH MEP PLANS. CONTRACTOR SHALL PROTECT ALL EXISTING ELECTRIC SERVICES DURING CONSTRUCTION AND NOTIFY ENGINEER IMMEDIATELY OF ANY CONFLICTS.
8. ALL EXISTING SHRUBS AND LANDSCAPING IN CONFLICT WITH SITE IMPROVEMENTS SHALL BE REMOVED.
9. THE CONTRACTOR WILL BE RESPONSIBLE FOR THE REPLACEMENT OF ANY DAMAGED PUBLIC/PRIVATE PROPERTY OR ROADWAY AS A RESULT OF CONSTRUCTION ON THIS SITE. THE RIGHT-OF-WAY MUST BE RESTORED TO EXISTING OR BETTER CONDITION.

GRAPHIC SCALE
10 0 5 10 20
1 INCH = 10 FEET
NORTH

NAPER SETTLEMENT

Wight
Wight & Company
wightco.com
2500 North Frontage Road
Darien, IL 60561
P 630.969.7000
F 630.969.7979

REV	DESCRIPTION	DATE
	ISSUED FOR RESUBMITTAL	10-23-20
	ISSUED FOR PERMIT	09-08-20

NAPER SETTLEMENT
INNOVATION
GATEWAY
& AG CENTER

523 S. WEBSTER STREET
NAPERVILLE, IL 60540

DEMOLITION PLAN
AG CENTER

Project Number:
200081
Drawn By:
SC
Sheet:
C1.02

S:\Darien\Naper Settlement\200081_PUD Major Change Process\01\11 Drawings\02 CD\C1.01 – C1.03 DEMOLITION PLAN.dwg schen Oct 23, 2020 10:53:11 am
Wight © Copyright All rights reserved. No part of these documents may be reproduced, stored, or transmitted in any form or by any means, electronic, mechanical, photocopying, recording or otherwise, without the prior written consent of Wight.

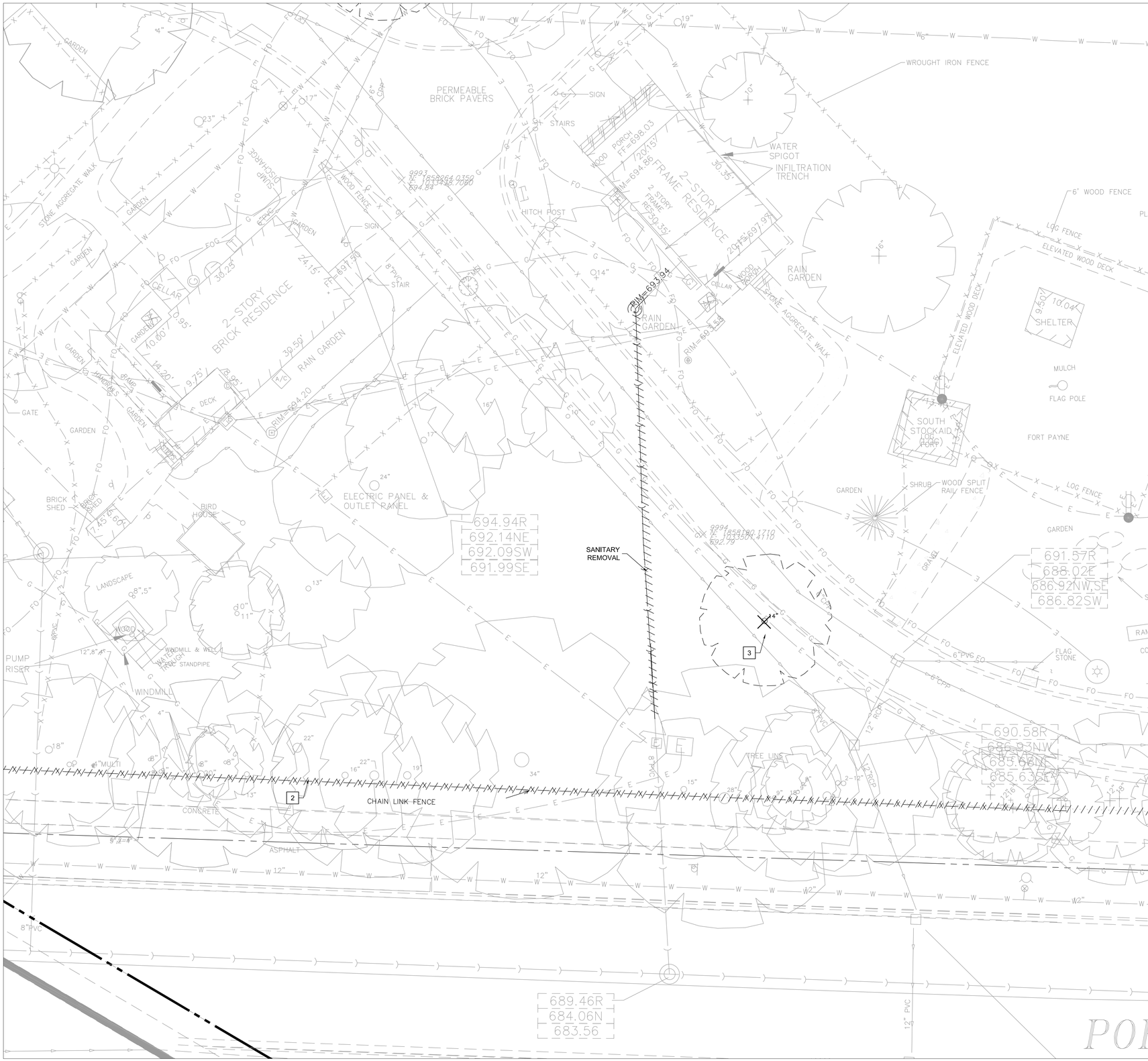

LEGEND

- ITEM REMOVAL
- LINEAR ITEM REMOVAL
- BRICK PAVER AND STONE BASE REMOVAL (SALVAGE BRICKS)
- CONCRETE AND STONE BASE REMOVAL
- BRICK PAVER REMOVAL AND REINSTALLED ON EXISTING STONE BASE
- CONCRETE REMOVAL ON EXISTING STONE BASE
- HMA AND STONE BASE REMOVAL

DEMO KEY NOTES

1. SAWCUT
2. REMOVE FENCE WITH POLE
3. REMOVE TREE
4. REMOVE BUILDING/FOUNDATION AND APPURTENANCES SEE ARCH PLANS
5. RELOCATE LIGHT POLE
6. RELOCATE SIGN
7. REMOVE BIKE RACK
8. RELOCATE FIRE HYDRANT

DEMOLITION NOTES

1. CONTRACTOR TO PROTECT ALL EXISTING UTILITIES DURING DEMOLITION & CONSTRUCTION ACTIVITIES, WHETHER SHOWN ON THE PLANS OR NOT, UNLESS OTHERWISE SPECIFIED. ANY RELOCATION, ADJUSTMENTS, CONFLICTS, ETC. SHALL BE BROUGHT TO THE ENGINEER'S ATTENTION IMMEDIATELY. CONTRACTOR TO LOCATE ALL PUBLIC & PRIVATE UTILITIES IN THE RIGHT-OF-WAY AND SITE PRIOR TO CONSTRUCTION.
2. ALL EXISTING CURB TO REMAIN UNLESS OTHERWISE SPECIFIED. ANY CURB DAMAGED DURING DEMOLITION SHALL BE REPLACED IN KIND.
3. ALL EXISTING SIGNS & LIGHT POLES TO REMAIN AND BE PROTECTED UNLESS OTHERWISE SPECIFIED. ANY SIGNS REMOVED SHALL BE SALVAGED AND RELOCATED OR RETURNED TO OWNER.
4. ANY UTILITY ADJUSTMENTS, CONFLICTS, RELOCATIONS, ETC. REQUIRED SHALL BE COORDINATED WITH ENGINEER AND UTILITY OWNER/PROVIDER.
5. ALL EXISTING TREES TO REMAIN AND TO BE PROTECTED UNLESS OTHERWISE SPECIFIED.
6. ALL DEMOLITION AND CONSTRUCTION IN THE RIGHT-OF-WAY SHALL BE COORDINATED AND APPROVED BY THE CITY OF NAPERVILLE. THE CONTRACTOR IS TO CONTACT THE INSPECTORS AT THE CITY OF NAPERVILLE PRIOR TO CONSTRUCTION.
7. COORDINATE ALL ELECTRICAL, CABLE FIBER, ETC., REMOVAL/RELOCATION WITH MEP PLANS. CONTRACTOR SHALL PROTECT ALL EXISTING ELECTRIC SERVICES DURING CONSTRUCTION AND NOTIFY ENGINEER IMMEDIATELY OF ANY CONFLICTS.
8. ALL EXISTING SHRUBS AND LANDSCAPING IN CONFLICT WITH SITE IMPROVEMENTS SHALL BE REMOVED.
9. THE CONTRACTOR WILL BE RESPONSIBLE FOR THE REPLACEMENT OF ANY DAMAGED PUBLIC/PRIVATE PROPERTY OR ROADWAY AS A RESULT OF CONSTRUCTION ON THIS SITE. THE RIGHT-OF-WAY MUST BE RESTORED TO EXISTING OR BETTER CONDITION.

NAPER SETTLEMENT

Wight

Wight & Company
wightco.com

2500 North Frontage Road
Darien, IL 60561

P 630.969.7000
F 630.969.7979

REV	DESCRIPTION	DATE
	ISSUED FOR RESUBMITTAL	10-23-20
	ISSUED FOR PERMIT	09-08-20

NAPER SETTLEMENT
INNOVATION
GATEWAY
& AG CENTER

523 S. WEBSTER STREET
NAPERVILLE, IL 60540

DEMOLITION PLAN
THRESHER PAVILION

Project Number:
200081

Drawn By:
SC

Sheet:
C1.03

S:\Darien\Naper Settlement\200081_PUD Major Change Process\01\11 Drawings\02 CD\C1.01 – C1.03 DEMOLITION PLAN.dwg schen Oct 23, 2020 10:53:35 am
Wight © Copyright All rights reserved. No part of these documents may be reproduced, stored, or transmitted in any form or by any means, electronic, mechanical, photocopying, recording or otherwise, without the prior written consent of Wight.

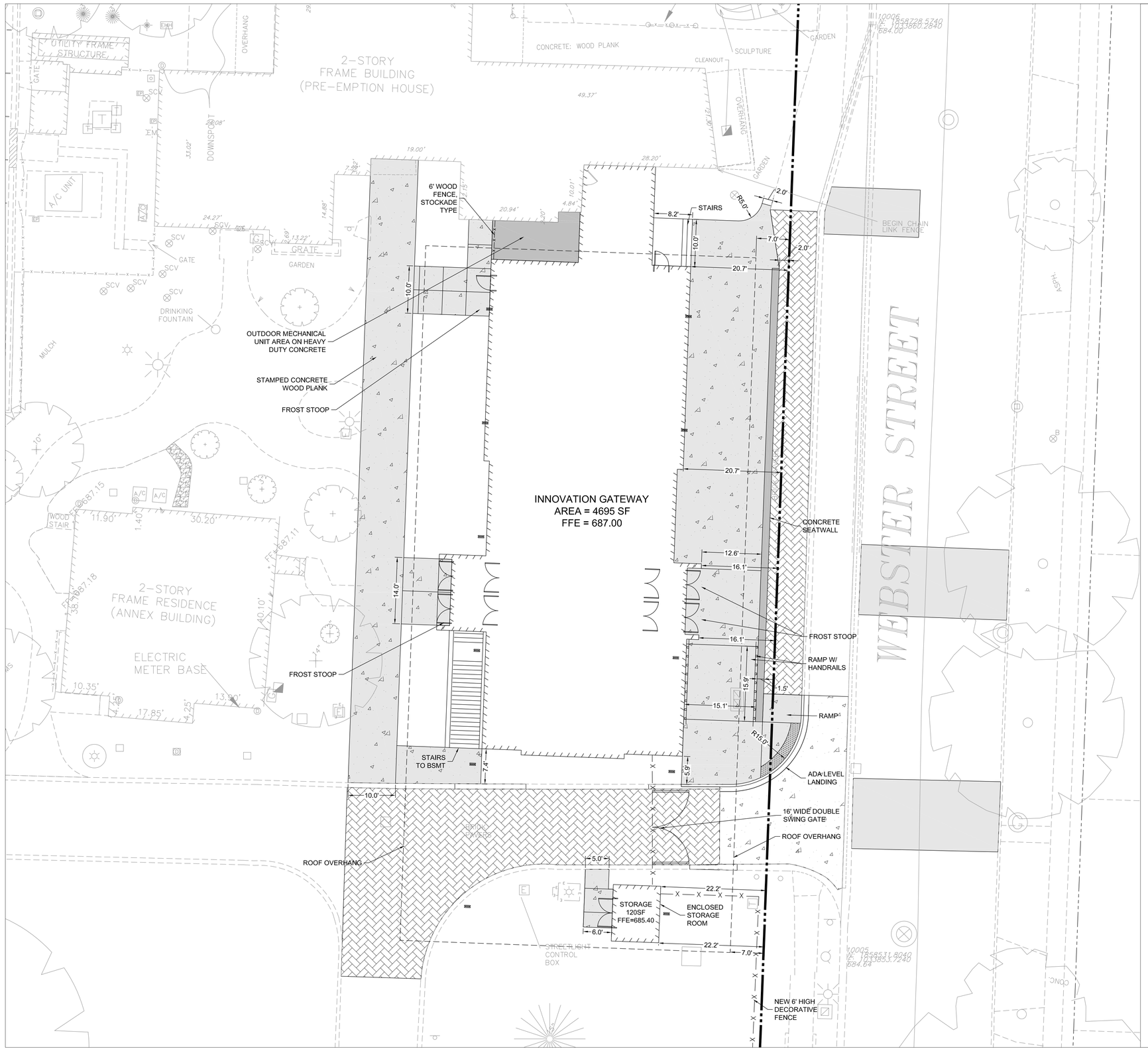

LEGEND

- CONCRETE SEATWALL
- PCC SIDEWALK AND STONE BASE
- HEAVY DUTY PCC SIDEWALK AND STONE BASE
- BRICK PAVER AND STONE BASE
- HMA WITH STONE BASE
- CONCRETE ON EXISTING STONE BASE
- BRICK PAVER ON EXISTING STONEBASE
- PROPERTY BUILDING
- PROPERTY BUILDING OVERHANG
- NEW FENCE
- PROPERTY LINE

SITE PLAN NOTES

1. ALL EXISTING CURB TO REMAIN UNLESS OTHERWISE SPECIFIED. ANY CURB DAMAGED DURING DEMOLITION SHALL BE REPLACED IN KIND.
2. ALL DIMENSIONS ARE TO THE BACK OF CURB/EDGE OF PAVEMENT UNLESS OTHERWISE SHOWN. ALL RADII DIMENSIONS ARE TO THE BACK OF CURB/EDGE OF PAVEMENT.
3. ALL DISTURBED AREAS ON-SITE AND IN THE RIGHT-OF-WAY SHALL BE RESTORED TO EXISTING CONDITION. ALL ITEMS DISTURBED SHALL BE REPLACED INCLUDING ALL LANDSCAPING, CURB, SIDEWALK, PAVEMENT, ETC.
4. ALL EXISTING TREES TO REMAIN AND TO BE PROTECTED UNLESS OTHERWISE NOTED.
5. CONTRACTOR TO COORDINATE WITH NAPER SETTLEMENT ON FINAL LOCATIONS OF SIGNS.

LAYOUT NOTE:

1. ALL LAYOUT FOR SITE IMPROVEMENTS SHALL BE COMPLETED BY A PROFESSIONAL LAND SURVEYOR HIRED BY THE CONTRACTOR. LAYOUT SHALL BE COMPLETED USING THE ELECTRONIC CAD FILES PROVIDED BY THE ENGINEER.

NAPER SETTLEMENT

Wight

Wight & Company
wightco.com

2500 North Frontage Road
Darien, IL 60561

P 630.969.7000
F 630.969.7979

REV	DESCRIPTION	DATE
	ISSUED FOR RESUBMITTAL	10-23-20
	ISSUED FOR PERMIT	09-08-20

NAPER SETTLEMENT INNOVATION GATEWAY & AG CENTER

523 S. WEBSTER STREET
NAPERVILLE, IL 60540

SITE PLAN –INNOVATION GATEWAY

Project Number:
200081

Drawn By:
SC

Sheet:
C2.01

S:\Darien\Naper Settlement\200081_PUD Major Change Process\01\11 Drawings\02 CD\C2.01 – C2.03 SITE PLAN.dwg schen Oct 23, 2020 1:42:46 pm
Wight © Copyright All rights reserved. No part of these documents may be reproduced, stored, or transmitted in any form or by any means, electronic, mechanical, photocopying, recording or otherwise, without the prior written consent of Wight.

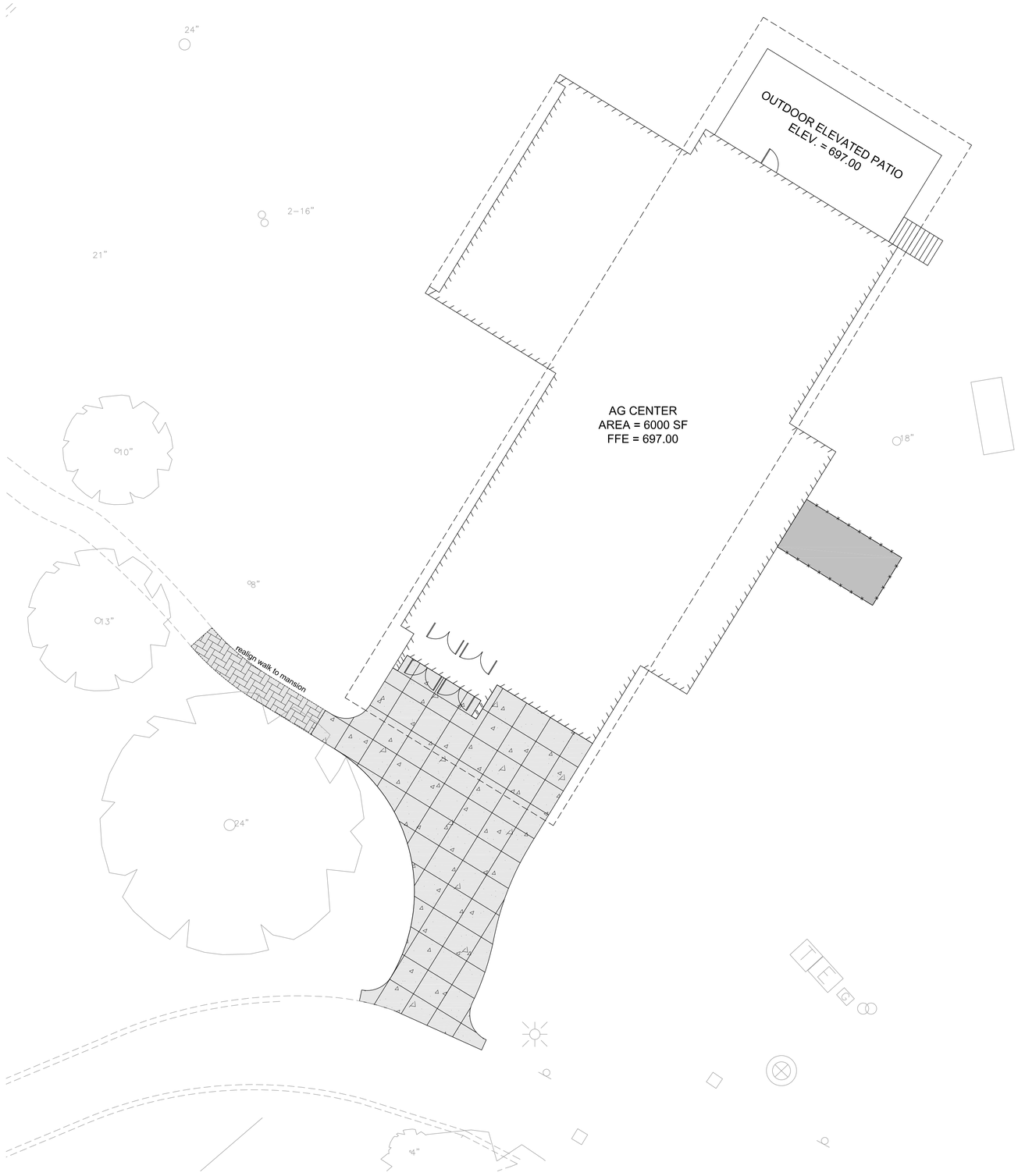
24"
2-16"
21"
OUTDOOR ELEVATED PATIO
ELEV. = 697.00
AG CENTER
AREA = 6000 SF
FFE = 697.00
10"
18"
8"
13"
realign walk to mansion
24"
4"

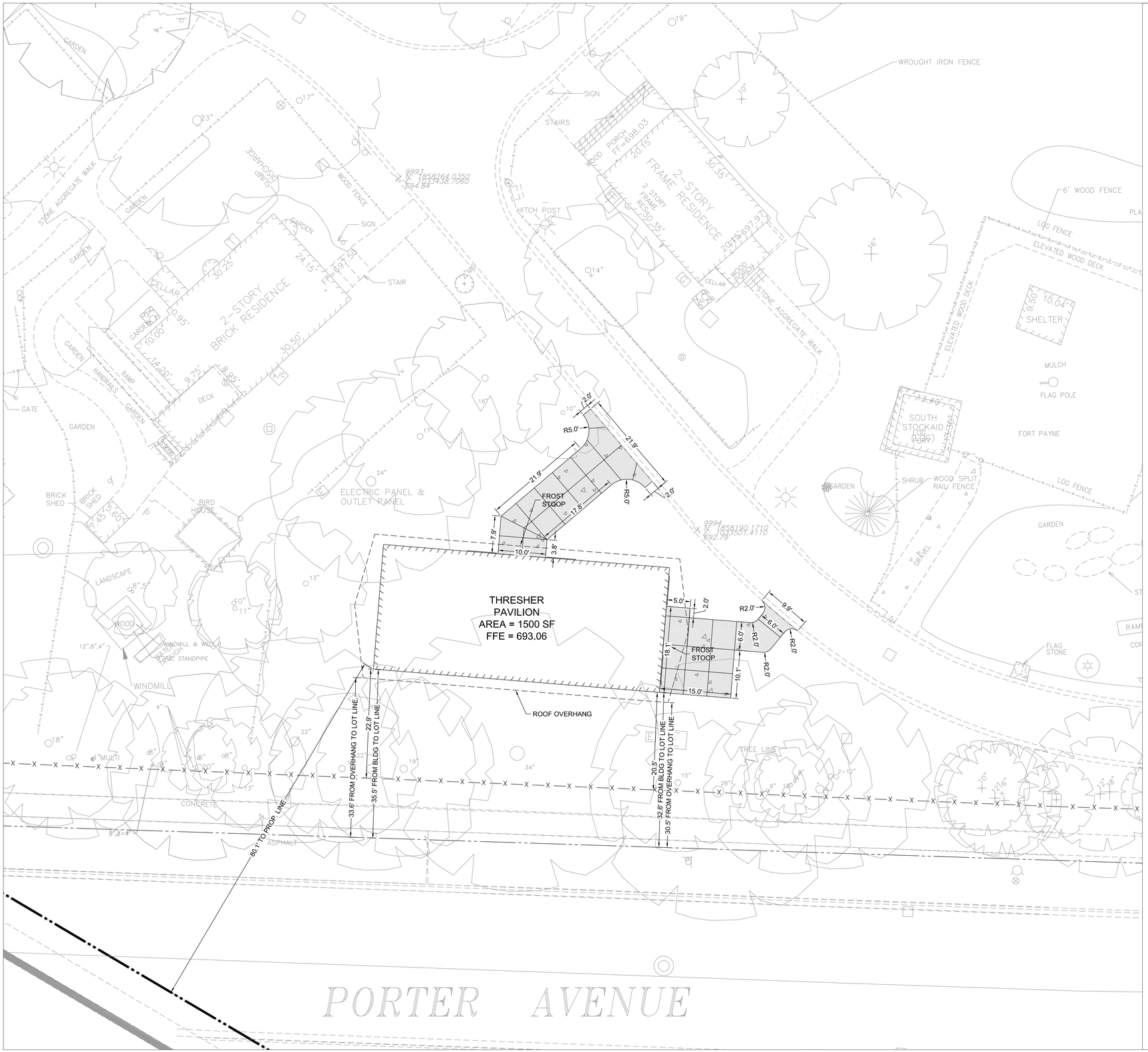

LEGEND

- CONCRETE SEATWALL
- PCC SIDEWALK AND STONE BASE
- HEAVY DUTY PCC SIDEWALK AND STONE BASE
- BRICK PAVER AND STONE BASE
- HMA WITH STONE BASE
- CONCRETE ON EXISTING STONE BASE
- BRICK PAVER ON EXISTING STONEBASE
- PROPERTY BUILDING
- PROPERTY BUILDING OVERHANG
- NEW FENCE
- PROPERTY LINE

SITE PLAN NOTES

1. ALL EXISTING CURB TO REMAIN UNLESS OTHERWISE SPECIFIED. ANY CURB DAMAGED DURING DEMOLITION SHALL BE REPLACED IN KIND.
2. ALL DIMENSIONS ARE TO THE BACK OF CURB/EDGE OF PAVEMENT UNLESS OTHERWISE SHOWN. ALL RADII DIMENSIONS ARE TO THE BACK OF CURB/EDGE OF PAVEMENT.
3. ALL DISTURBED AREAS ON-SITE AND IN THE RIGHT-OF-WAY SHALL BE RESTORED TO EXISTING CONDITION. ALL ITEMS DISTURBED SHALL BE REPLACED INCLUDING ALL LANDSCAPING, CURB, SIDEWALK, PAVEMENT, ETC.
4. ALL EXISTING TREES TO REMAIN AND TO BE PROTECTED UNLESS OTHERWISE NOTED.
5. CONTRACTOR TO COORDINATE WITH NAPER SETTLEMENT ON FINAL LOCATIONS OF SIGNS.

LAYOUT NOTE:

1. ALL LAYOUT FOR SITE IMPROVEMENTS SHALL BE COMPLETED BY A PROFESSIONAL LAND SURVEYOR HIRED BY THE CONTRACTOR. LAYOUT SHALL BE COMPLETED USING THE ELECTRONIC CAD FILES PROVIDED BY THE ENGINEER.

NORTH

GRAPHIC SCALE
10 0 5 10 20
1 INCH = 10 FEET

NAPER SETTLEMENT

Wight

Wight & Company
wightco.com

2500 North Frontage Road
Darien, IL 60561

P 630.969.7000
F 630.969.7979

REV	DESCRIPTION	DATE
	ISSUED FOR RESUBMITTAL	10-23-20
	ISSUED FOR PERMIT	09-08-20

NAPER SETTLEMENT INNOVATION GATEWAY & AG CENTER

523 S. WEBSTER STREET
NAPERVILLE, IL 60540

SITE PLAN –THRESHER PAVILION

Project Number:
200081

Drawn By:
SC

Sheet:
C2.03

S:\Darien\Naper Settlement\200081_PUD Major Change Process\01\11 Drawings\02 CD\C2.01 – C2.03 SITE PLAN.dwg schen Oct 23, 2020 1:43:18 pm

Wight © Copyright All rights reserved. No part of these documents may be reproduced, stored, or transmitted in any form or by any means, electronic, mechanical, photocopying, recording or otherwise, without the prior written consent of Wight.

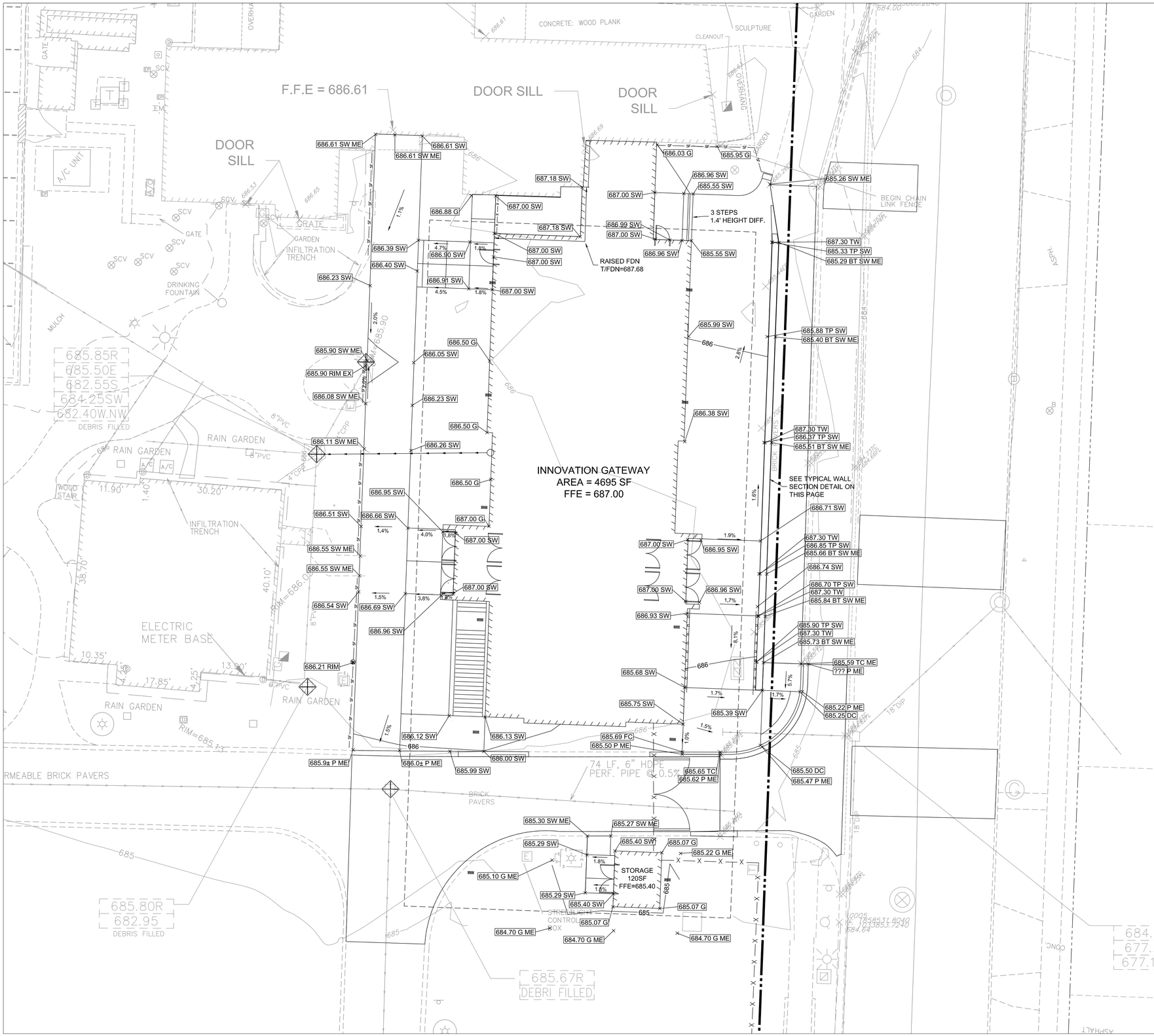

LEGEND

ME	MATCH EXISTING ELEVATION
HP	HIGH POINT
11.77 P	TOP OF PAVEMENT ELEVATION
11.77 G	GROUND ELEVATION
11.77 SW	TOP OF SIDEWALK ELEVATION
11.77 RIM	RIM ELEVATION
11.77 TC	TOP OF CURB ELEVATION
11.77 DC	DEPRESSED CURB ELEVATION
11.77 FC	FLUSH CURB ELEVATION
11.77 TW	TOP OF WALL ELEVATION
745	EXISTING CONTOUR LINE
745	PROPOSED CONTOUR LINE
2.0%	SLOPE/FLOW DIRECTION
	CATCH BASIN
	MANHOLE
	INLET PROTECTION
SF SF	SILT FENCE

NOTES:

1. CONTRACTOR TO VERIFY ALL EXISTING UTILITY LOCATIONS, SIZES, SLOPES, INVERTS, ETC. AND CONTACT ENGINEER IMMEDIATELY IF THERE ARE ANY CONFLICTS/DISCREPANCIES.
2. CONTRACTOR TO COORDINATE LOCATIONS, SIZE AND INVERTS WITH MEP PLANS.
3. THE CONTRACTOR SHALL PROTECT ANY AND ALL TREES EITHER SHOWN OR NOT SHOWN ON THE PLANS UNLESS OTHERWISE SPECIFIED. MINIMUM PROTECTION FOR TREES SHALL BE 4' SNOW FENCE INSTALLED ALONG THE DRIP LINE OF TREES.
4. CONTRACTOR TO PROTECT ALL EXISTING UTILITIES.
5. ALL EXISTING UTILITY STRUCTURES SHALL BE ADJUSTED AS NECESSARY TO MATCH FINISH GRADE. ALL EXISTING UTILITY STRUCTURES REQUIRING ADJUSTMENT OR RECONSTRUCTION SHALL BE COMPLETED BY THE CONTRACTOR TO THE SATISFACTION OF THE UTILITY OWNER. ADJUSTMENTS AND/OR RECONSTRUCTIONS NOT CALLED FOR ON THE PLANS SHALL BE CONSIDERED INCIDENTAL TO THE CONTRACT. NO MORE THAN A TOTAL OF 12 INCHES OF ADJUSTING RINGS AND/OR 2 ADJUSTING RINGS SHALL BE ALLOWED.
6. ALL SITE WORK SHALL BE IN CONFORMANCE WITH THE ILLINOIS ACCESSIBILITY CODE AND WITH THE AMERICANS WITH DISABILITIES ACT.
7. RAMPS SHALL NOT EXCEED A RUNNING SLOPE OF 1:12 (8.33%).
8. MAXIMUM CROSS-SLOPE ON ANY WALK OR RAMPS SHALL BE 2%. ALL ACCESSIBLE PARKING SPACES AND LOADING ZONES SHALL HAVE A MAXIMUM SLOPE OF 2% IN ANY DIRECTION.

EARTHWORK NOTES:

CONTRACTOR IS RESPONSIBLE FOR DETERMINING EXACT EARTHWORK REQUIREMENTS (CUT, FILL, HAUL IN/OFF, ETC.) TO BRING SITE TO FINISHED GRADE. ANY ON-SITE RE-USE OF ON-SITE DEMOLITION DEBRIS/MATERIALS MUST BE APPROVED BY THE GEOTECHNICAL ENGINEER.

AS-BUILT NOTES:

THE CONTRACTOR IS RESPONSIBLE FOR ALL AS-BUILT SURVEYS. ALL AS-BUILT SURVEYS SHALL BE COMPLETED BY A PROFESSIONAL LAND SURVEYOR AND BE SIGNED AND SEALED. THE CONTRACTOR SHALL SUBMIT TWO SETS OF THE "AS-BUILT" FINAL ENGINEERING DRAWINGS (I.E. RECORD DRAWINGS) AND STORMWATER MANAGEMENT CALCULATIONS UPON COMPLETION OF IMPROVEMENTS AND INCLUDE ELECTRONIC CAD FILES. THE RECORD DRAWINGS SHOULD AT LEAST INCLUDE THE FOLLOWING INFORMATION: AS-BUILT DETENTION CONTOURS, ELEVATIONS; ELEVATION, AND LOCATION (TIES TO TWO POINTS) OF ALL NEW STRUCTURES INCLUDING FIRE HYDRANTS, VALVE BOXES AND VAULTS, LINESTOP SLEEVES, WATER SERVICE CORPORATION STOPS, WATER MAIN FITTINGS/BENDS, MANHOLES, SANITARY SERVICE WYES (MEASURED FROM DOWNSTREAM MANHOLE), ALL STORM/SANITARY SEWER STRUCTURES (INCLUDING INVERTS AND PIPE SIZES), ALL PIPES (LOCATIONS, SLOPES, LENGTHS, ETC.), OUTLET CONTROL STRUCTURES (INCLUDING RESTRICTOR SIZES AND ELEVATIONS PLUS TOP OF WALL) AND ABANDONED WATER OR SANITARY SERVICE LINES. DETAILED TOPOGRAPHIC SURVEY OF ALL HIGH POINTS, LOW POINTS, CHANGE OF SLOPE INCLUDING GUTTER GRADES, TOP OF CURB GRADES, PAVEMENT GRADES, SIDEWALK GRADES, RAMP GRADES, ETC. TO VERIFY POSITIVE DRAINAGE. ALL ELEVATIONS SHOULD BE REFERENCED TO THE SAME BENCHMARK DATUM AS THE ORIGINAL DESIGN PLANS. HORIZONTAL TIES SHALL BE REFERENCED TO LOT LINES, BACK OF CURB, OR PROPERTY CORNERS. WITHIN DETENTION/BMP AREAS: FOR VERIFICATION OF BMP VOLUME AND SUBBASE GRADES, PRIOR TO BACK FILLING WITH CA-7, THE CONTRACTOR SHALL PROVIDE ENGINEER WITH A CERTIFIED TOPO SURVEY OF AS-BUILT SUBBASE GRADES FOR ENGINEER APPROVAL AND ALSO A COPY OF RECEIPT OF THE CA-7 AGGREGATE.

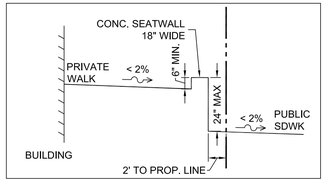

TYPICAL WALL SECTION

NAPER SETTLEMENT

Wight

Wight & Company
wightco.com

2500 North Frontage Road
Darien, IL 60561

P 630.969.7000
F 630.969.7979

REV	DESCRIPTION	DATE
	ISSUED FOR RESUBMITTAL	10-23-20
	ISSUED FOR PERMIT	09-08-20

NAPER SETTLEMENT INNOVATION GATEWAY & AG CENTER

523 S. WEBSTER STREET
NAPERVILLE, IL 60540

GRADING PLAN –INNOVATION GATEWAY

Project Number:
200081

Drawn By:
SC

Sheet:
C3.01

S:\Darien\Naper Settlement\200081_PUD Major Change Process\01\11 Drawings\02 CD\C3.01 – C3.03 GRADING PLAN.dwg schen Oct 23, 2020 2:48:11 pm
Wight © Copyright All rights reserved. No part of these documents may be reproduced, stored, or transmitted in any form or by any means, electronic, mechanical, photocopying, recording or otherwise, without the prior written consent of Wight.

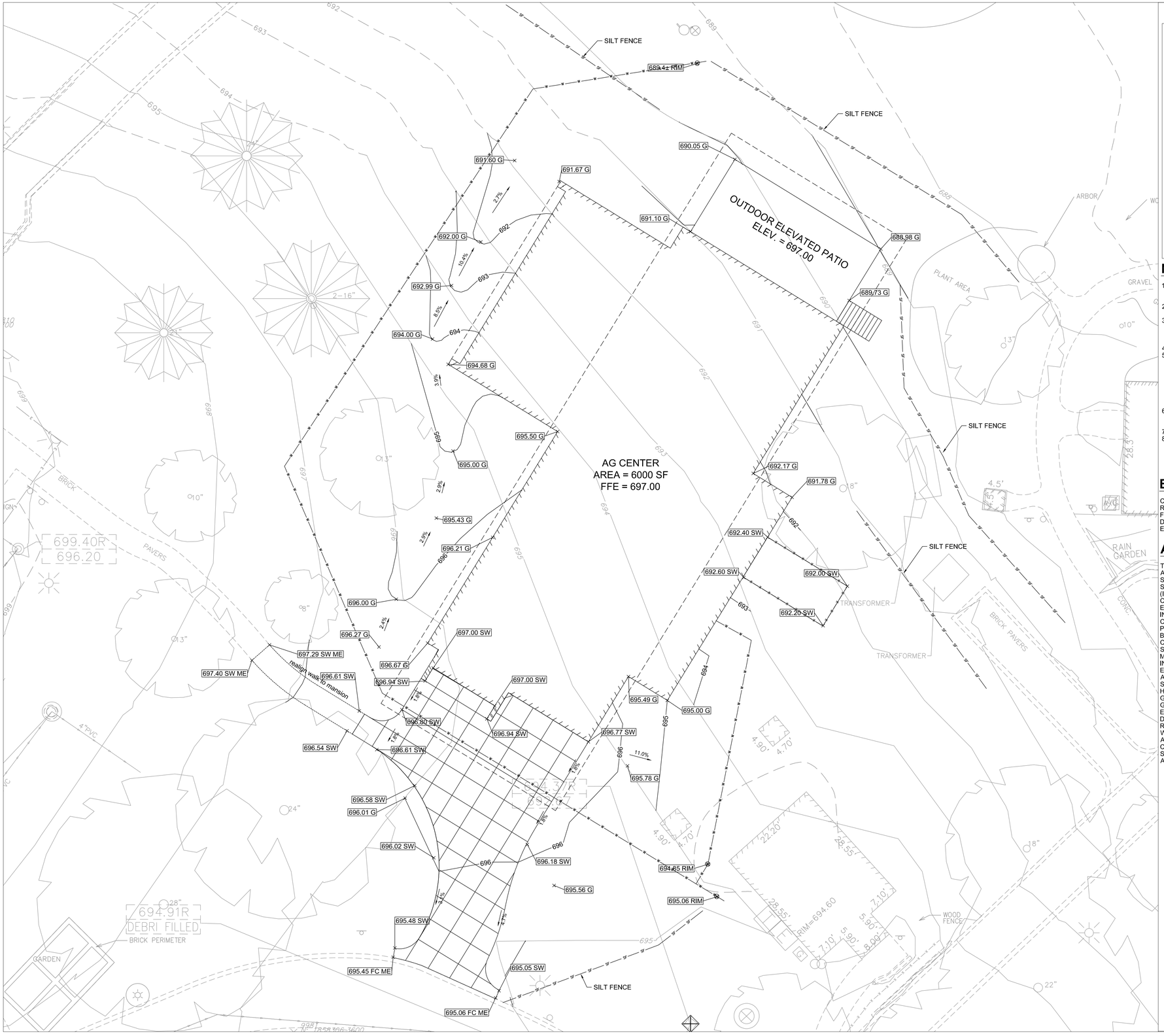

LEGEND

ME	MATCH EXISTING ELEVATION
HP	HIGH POINT
11.77 P	TOP OF PAVEMENT ELEVATION
11.77 G	GROUND ELEVATION
11.77 SW	TOP OF SIDEWALK ELEVATION
11.77 RIM	RIM ELEVATION
11.77 TC	TOP OF CURB ELEVATION
11.77 DC	DEPRESSED CURB ELEVATION
11.77 FC	FLUSH CURB ELEVATION
11.77 TW	TOP OF WALL ELEVATION
745	EXISTING CONTOUR LINE
745	PROPOSED CONTOUR LINE
2.0%	SLOPE/FLOW DIRECTION
	CATCH BASIN
	MANHOLE
	INLET PROTECTION
SF	SILT FENCE

NOTES:

1. CONTRACTOR TO VERIFY ALL EXISTING UTILITY LOCATIONS, SIZES, SLOPES, INVERTS, ETC. AND CONTACT ENGINEER IMMEDIATELY IF THERE ARE ANY CONFLICTS/DISCREPANCIES.
2. CONTRACTOR TO COORDINATE LOCATIONS, SIZE AND INVERTS WITH MEP PLANS.
3. THE CONTRACTOR SHALL PROTECT ANY AND ALL TREES EITHER SHOWN OR NOT SHOWN ON THE PLANS UNLESS OTHERWISE SPECIFIED. MINIMUM PROTECTION FOR TREES SHALL BE 4' SNOW FENCE INSTALLED ALONG THE DRIP LINE OF TREES.
4. CONTRACTOR TO PROTECT ALL EXISTING UTILITIES.
5. ALL EXISTING UTILITY STRUCTURES SHALL BE ADJUSTED AS NECESSARY TO MATCH FINISH GRADE. ALL EXISTING UTILITY STRUCTURES REQUIRING ADJUSTMENT OR RECONSTRUCTION SHALL BE COMPLETED BY THE CONTRACTOR TO THE SATISFACTION OF THE UTILITY OWNER. ADJUSTMENTS AND/OR RECONSTRUCTIONS NOT CALLED FOR ON THE PLANS SHALL BE CONSIDERED INCIDENTAL TO THE CONTRACT. NO MORE THAN A TOTAL OF 12 INCHES OF ADJUSTING RINGS AND/OR 2 ADJUSTING RINGS SHALL BE ALLOWED.
6. ALL SITE WORK SHALL BE IN CONFORMANCE WITH THE ILLINOIS ACCESSIBILITY CODE AND WITH THE AMERICANS WITH DISABILITIES ACT.
7. RAMPS SHALL NOT EXCEED A RUNNING SLOPE OF 1:12 (8.33%).
8. MAXIMUM CROSS-SLOPE ON ANY WALK OR RAMPS SHALL BE 2%. ALL ACCESSIBLE PARKING SPACES AND LOADING ZONES SHALL HAVE A MAXIMUM SLOPE OF 2% IN ANY DIRECTION.

EARTHWORK NOTES:

CONTRACTOR IS RESPONSIBLE FOR DETERMINING EXACT EARTHWORK REQUIREMENTS (CUT, FILL, HAUL IN/OFF, ETC.) TO BRING SITE TO FINISHED GRADE. ANY ON-SITE RE-USE OF ON-SITE DEMOLITION DEBRIS/MATERIALS MUST BE APPROVED BY THE GEOTECHNICAL ENGINEER.

AS-BUILT NOTES:

THE CONTRACTOR IS RESPONSIBLE FOR ALL AS-BUILT SURVEYS. ALL AS-BUILT SURVEYS SHALL BE COMPLETED BY A PROFESSIONAL LAND SURVEYOR AND BE SIGNED AND SEALED. THE CONTRACTOR SHALL SUBMIT TWO SETS OF THE "AS-BUILT" FINAL ENGINEERING DRAWINGS (I.E. RECORD DRAWINGS) AND STORMWATER MANAGEMENT CALCULATIONS UPON COMPLETION OF IMPROVEMENTS AND INCLUDE ELECTRONIC CAD FILES. THE RECORD DRAWINGS SHOULD AT LEAST INCLUDE THE FOLLOWING INFORMATION: AS-BUILT DETENTION CONTOURS, ELEVATIONS; ELEVATION, AND LOCATION (TIES TO TWO POINTS) OF ALL NEW STRUCTURES INCLUDING FIRE HYDRANTS, VALVE BOXES AND VAULTS, LINESTOP SLEEVES, WATER SERVICE CORPORATION STOPS, WATER MAIN FITTINGS/BENDS, MANHOLES, SANITARY SERVICE WYES (MEASURED FROM DOWNSTREAM MANHOLE), ALL STORM/SANITARY SEWER STRUCTURES (INCLUDING INVERTS AND PIPE SIZES), ALL PIPES (LOCATIONS, SLOPES, LENGTHS, ETC.), OUTLET CONTROL STRUCTURES (INCLUDING RESTRICTOR SIZES AND ELEVATIONS PLUS TOP OF WALL) AND ABANDONED WATER OR SANITARY SERVICE LINES. DETAILED TOPOGRAPHIC SURVEY OF ALL HIGH POINTS, LOW POINTS, CHANGE OF SLOPE INCLUDING GUTTER GRADES, TOP OF CURB GRADES, PAVEMENT GRADES, SIDEWALK GRADES, RAMP GRADES, ETC. TO VERIFY POSITIVE DRAINAGE. ALL ELEVATIONS SHOULD BE REFERENCED TO THE SAME BENCHMARK DATUM AS THE ORIGINAL DESIGN PLANS. HORIZONTAL TIES SHALL BE REFERENCED TO LOT LINES, BACK OF CURB, OR PROPERTY CORNERS. WITHIN DETENTION/BMP AREAS: FOR VERIFICATION OF BMP VOLUME AND SUBBASE GRADES, PRIOR TO BACK FILLING WITH CA-7, THE CONTRACTOR SHALL PROVIDE ENGINEER WITH A CERTIFIED TOPO SURVEY OF AS-BUILT SUBBASE GRADES FOR ENGINEER APPROVAL AND ALSO A COPY OF RECEIPT OF THE CA-7 AGGREGATE.

NORTH

GRAPHIC SCALE

10 0 5 10 20

1 INCH = 10 FEET

NAPER SETTLEMENT

Wight

Wight & Company
wightco.com

2500 North Frontage Road
Darien, IL 60561

P 630.969.7000
F 630.969.7979

REV	DESCRIPTION	DATE
	ISSUED FOR RESUBMITTAL	10-23-20
	ISSUED FOR PERMIT	09-08-20

NAPER SETTLEMENT INNOVATION GATEWAY & AG CENTER

523 S. WEBSTER STREET
NAPERVILLE, IL 60540

GRADING PLAN –AG CENTER

Project Number:
200081

Drawn By:
SC

Sheet:
C3.02

S:\Darien\Naper Settlement\200081_PUD Major Change Process\01\11 Drawings\02 CD\C3.01 – C3.03 GRADING PLAN.dwg schen Oct 23, 2020 2:49:05 pm
Wight & Copyright All rights reserved. No part of these documents may be reproduced, stored, or transmitted in any form or by any means, electronic, mechanical, photocopying, recording or otherwise, without the prior written consent of Wight.

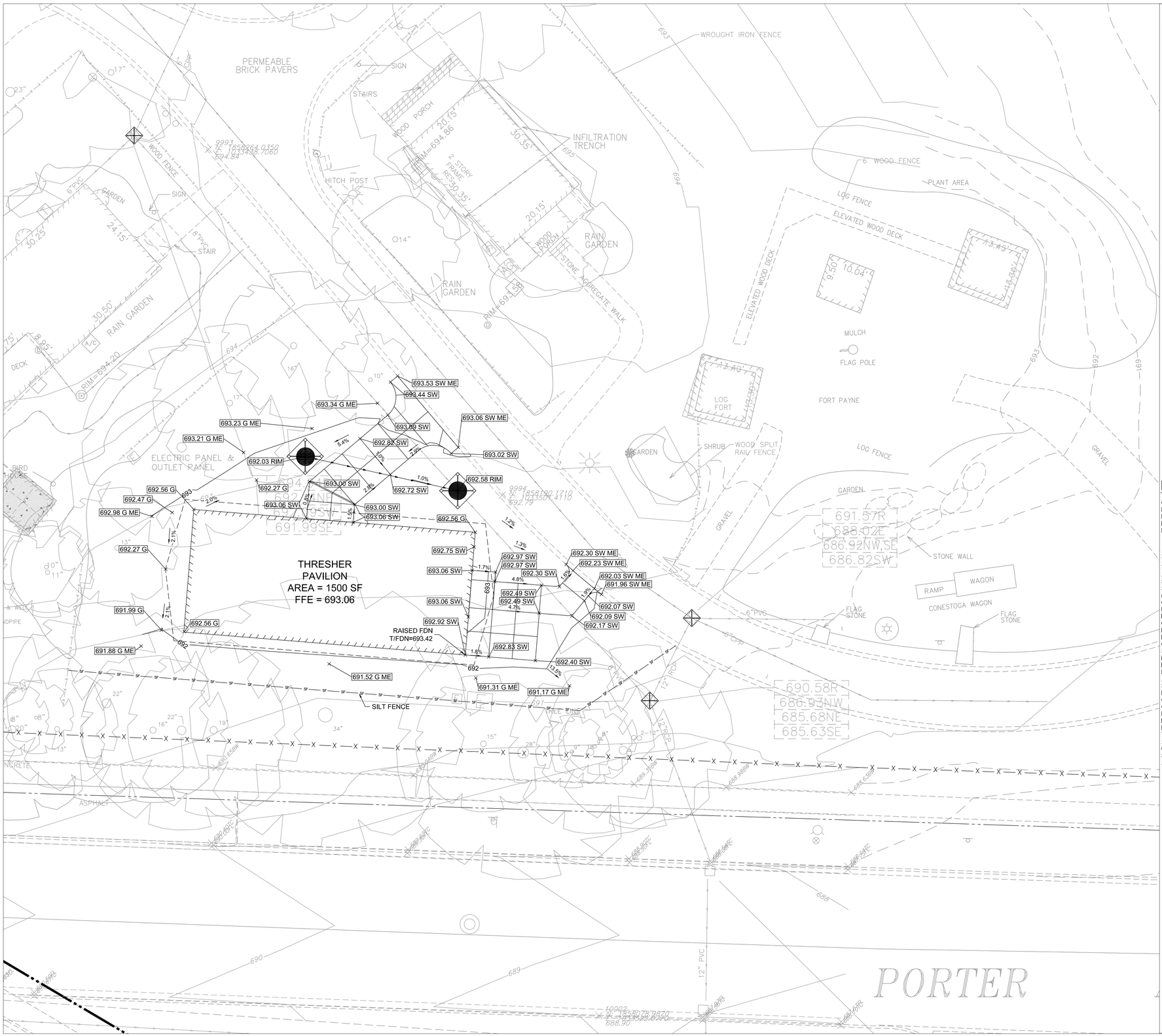

LEGEND

ME	MATCH EXISTING ELEVATION
HP	HIGH POINT
11.77 P	TOP OF PAVEMENT ELEVATION
11.77 G	GROUND ELEVATION
11.77 SW	TOP OF SIDEWALK ELEVATION
11.77 RIM	RIM ELEVATION
11.77 TC	TOP OF CURB ELEVATION
11.77 DC	DEPRESSED CURB ELEVATION
11.77 FC	FLUSH CURB ELEVATION
11.77 TW	TOP OF WALL ELEVATION
745	EXISTING CONTOUR LINE
745	PROPOSED CONTOUR LINE
2.0%	SLOPE/FLOW DIRECTION
	CATCH BASIN
	MANHOLE
	INLET PROTECTION
SF SF	SILT FENCE

NOTES:

1. CONTRACTOR TO VERIFY ALL EXISTING UTILITY LOCATIONS, SIZES, SLOPES, INVERTS, ETC. AND CONTACT ENGINEER IMMEDIATELY IF THERE ARE ANY CONFLICTS/DISCREPANCIES.
2. CONTRACTOR TO COORDINATE LOCATIONS, SIZE AND INVERTS WITH MEP PLANS.
3. THE CONTRACTOR SHALL PROTECT ANY AND ALL TREES EITHER SHOWN OR NOT SHOWN ON THE PLANS UNLESS OTHERWISE SPECIFIED. MINIMUM PROTECTION FOR TREES SHALL BE 4' SNOW FENCE INSTALLED ALONG THE DRIP LINE OF TREES.
4. CONTRACTOR TO PROTECT ALL EXISTING UTILITIES.
5. ALL EXISTING UTILITY STRUCTURES SHALL BE ADJUSTED AS NECESSARY TO MATCH FINISH GRADE. ALL EXISTING UTILITY STRUCTURES REQUIRING ADJUSTMENT OR RECONSTRUCTION SHALL BE COMPLETED BY THE CONTRACTOR TO THE SATISFACTION OF THE UTILITY OWNER. ADJUSTMENTS AND/OR RECONSTRUCTIONS NOT CALLED FOR ON THE PLANS SHALL BE CONSIDERED INCIDENTAL TO THE CONTRACT. NO MORE THAN A TOTAL OF 12 INCHES OF ADJUSTING RINGS AND/OR 2 ADJUSTING RINGS SHALL BE ALLOWED.
6. ALL SITE WORK SHALL BE IN CONFORMANCE WITH THE ILLINOIS ACCESSIBILITY CODE AND WITH THE AMERICANS WITH DISABILITIES ACT.
7. RAMPS SHALL NOT EXCEED A RUNNING SLOPE OF 1:12 (8.33%).
8. MAXIMUM CROSS-SLOPE ON ANY WALK OR RAMPS SHALL BE 2%. ALL ACCESSIBLE PARKING SPACES AND LOADING ZONES SHALL HAVE A MAXIMUM SLOPE OF 2% IN ANY DIRECTION.

EARTHWORK NOTES:

CONTRACTOR IS RESPONSIBLE FOR DETERMINING EXACT EARTHWORK REQUIREMENTS (CUT, FILL, HAUL IN/OFF, ETC.) TO BRING SITE TO FINISHED GRADE. ANY ON-SITE RE-USE OF ON-SITE DEMOLITION DEBRIS/MATERIALS MUST BE APPROVED BY THE GEOTECHNICAL ENGINEER.

AS-BUILT NOTES:

THE CONTRACTOR IS RESPONSIBLE FOR ALL AS-BUILT SURVEYS. ALL AS-BUILT SURVEYS SHALL BE COMPLETED BY A PROFESSIONAL LAND SURVEYOR AND BE SIGNED AND SEALED. THE CONTRACTOR SHALL SUBMIT TWO SETS OF THE "AS-BUILT" FINAL ENGINEERING DRAWINGS (I.E. RECORD DRAWINGS) AND STORMWATER MANAGEMENT CALCULATIONS UPON COMPLETION OF IMPROVEMENTS AND INCLUDE ELECTRONIC CAD FILES. THE RECORD DRAWINGS SHOULD AT LEAST INCLUDE THE FOLLOWING INFORMATION: AS-BUILT DETENTION CONTOURS, ELEVATIONS; ELEVATION, AND LOCATION (TIES TO TWO POINTS) OF ALL NEW STRUCTURES INCLUDING FIRE HYDRANTS, VALVE BOXES AND VAULTS, LINESTOP SLEEVES, WATER SERVICE CORPORATION STOPS, WATER MAIN FITTINGS/BENDS, MANHOLES, SANITARY SERVICE WYES (MEASURED FROM DOWNSTREAM MANHOLE), ALL STORM/SANITARY SEWER STRUCTURES (INCLUDING INVERTS AND PIPE SIZES), ALL PIPES (LOCATIONS, SLOPES, LENGTHS, ETC.), OUTLET CONTROL STRUCTURES (INCLUDING RESTRICTOR SIZES AND ELEVATIONS PLUS TOP OF WALL) AND ABANDONED WATER OR SANITARY SERVICE LINES. DETAILED TOPOGRAPHIC SURVEY OF ALL HIGH POINTS, LOW POINTS, CHANGE OF SLOPE INCLUDING GUTTER GRADES, TOP OF CURB GRADES, PAVEMENT GRADES, SIDEWALK GRADES, RAMP GRADES, ETC. TO VERIFY POSITIVE DRAINAGE. ALL ELEVATIONS SHOULD BE REFERENCED TO THE SAME BENCHMARK DATUM AS THE ORIGINAL DESIGN PLANS. HORIZONTAL TIES SHALL BE REFERENCED TO LOT LINES, BACK OF CURB, OR PROPERTY CORNERS. WITHIN DETENTION/BMP AREAS: FOR VERIFICATION OF BMP VOLUME AND SUBBASE GRADES, PRIOR TO BACK FILLING WITH CA-7, THE CONTRACTOR SHALL PROVIDE ENGINEER WITH A CERTIFIED TOPO SURVEY OF AS-BUILT SUBBASE GRADES FOR ENGINEER APPROVAL AND ALSO A COPY OF RECEIPT OF THE CA-7 AGGREGATE.

NORTH

GRAPHIC SCALE
10 0 5 10 20
1 INCH = 10 FEET

NAPER SETTLEMENT

Wight

Wight & Company
wightco.com

2500 North Frontage Road
Darien, IL 60561

P 630.969.7000
F 630.969.7979

REV	DESCRIPTION	DATE
	ISSUED FOR RESUBMITTAL	10-23-20
	ISSUED FOR PERMIT	09-08-20

NAPER SETTLEMENT INNOVATION GATEWAY & AG CENTER

523 S. WEBSTER STREET
NAPERVILLE, IL 60540

GRADING PLAN –THRESHER PAVILION

Project Number:
200081
Drawn By:
SC
Sheet:

C3.03

S:\Darien\Naper Settlement\200081_PUD Major Change Process\01\11 Drawings\02 CD\C3.01 – C3.03 GRADING PLAN.dwg schen Oct 23, 2020 3:00:41 pm
Wight © Copyright All rights reserved. No part of these documents may be reproduced, stored, or transmitted in any form or by any means, electronic, mechanical, photocopying, recording or otherwise, without the prior written consent of Wight.

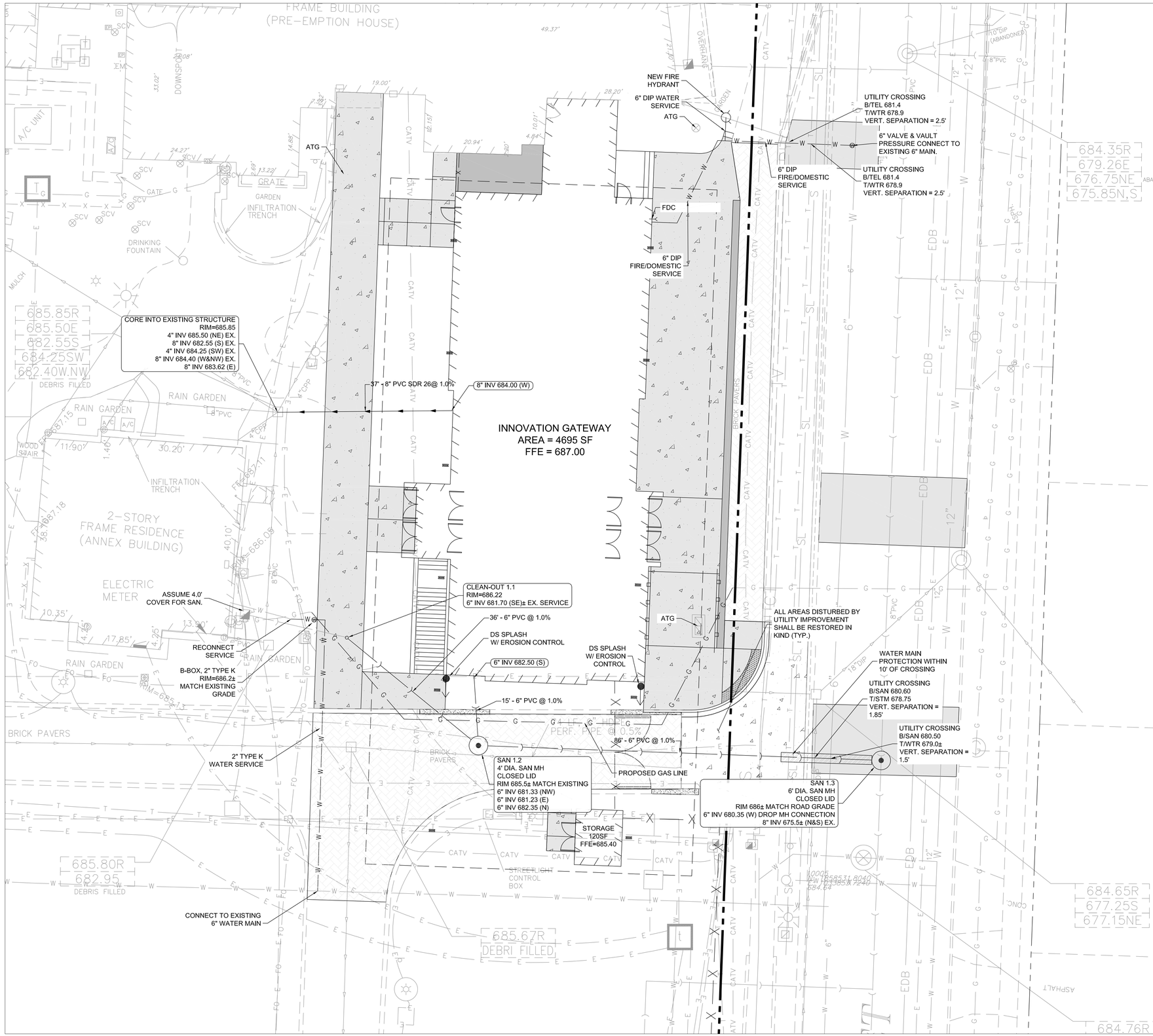

LEGEND

—W—W—	WATER MAIN
	STORM SEWER
	SANITARY SEWER
	UNDERDRAIN
—E—	ELECTRIC
—G—	GAS
●	CATCH BASIN
⊙	MANHOLE
◄	FLARED END SECTION
Ⓦ	WATER VAULT
	FIRE HYDRANT
	CLEANOUT
ATG	ADJUST STRUCTURE TO FINISHED GRADE
▨	WATER MAIN PROTECTION
▭	ROW RESTORATION

UTILITY NOTES:

1. CONTRACTOR TO VERIFY ALL EXISTING UTILITY LOCATIONS, SIZES, SLOPES, INVERTS, ETC. AND CONTACT ENGINEER IMMEDIATELY IF THERE ARE ANY CONFLICTS/DISCREPANCIES.
2. CONTRACTOR TO PROTECT ALL EXISTING UTILITIES.
3. ALL EXISTING UTILITY STRUCTURES SHALL BE ADJUSTED AS NECESSARY TO MATCH FINISH GRADE. ALL EXISTING UTILITY STRUCTURES REQUIRING ADJUSTMENT OR RECONSTRUCTION SHALL BE COMPLETED BY THE CONTRACTOR TO THE SATISFACTION OF THE UTILITY OWNER. ADJUSTMENTS AND/OR RECONSTRUCTIONS NOT CALLED FOR ON THE PLANS SHALL BE CONSIDERED INCIDENTAL TO THE CONTRACT. NO MORE THAN A TOTAL OF 12 INCHES OF ADJUSTING RINGS AND/OR 2 ADJUSTING RINGS SHALL BE ALLOWED.
4. CONTRACTOR TO COORDINATE ALL UTILITY CONNECTIONS AT THE BUILDING WITH THE MEP TO VERIFY CONNECTION LOCATION, PIPE SIZE, AND INVERT.
5. CONTRACTOR TO SEE MEP PLANS FOR ALL DETAILS, LOCATION, ROUTING, SIZE, ETC. REGARDING GAS, TELEPHONE, ELECTRIC, AND LIGHTING DESIGN. FOLLOW ALL REQUIREMENTS OF UTILITY PROVIDERS.

AS-BUILT NOTES:

THE CONTRACTOR IS RESPONSIBLE FOR ALL AS-BUILT SURVEYS. ALL AS-BUILT SURVEYS SHALL BE COMPLETED BY A PROFESSIONAL LAND SURVEYOR AND BE SIGNED AND SEALED. THE CONTRACTOR SHALL SUBMIT TWO SETS OF THE "AS-BUILT" FINAL ENGINEERING DRAWINGS (I.E. RECORD DRAWINGS) AND STORMWATER MANAGEMENT CALCULATIONS UPON COMPLETION OF IMPROVEMENTS AND INCLUDE ELECTRONIC CAD FILES. THE RECORD DRAWINGS SHOULD AT LEAST INCLUDE THE FOLLOWING INFORMATION: AS-BUILT DETENTION CONTOURS, ELEVATIONS (INCLUDING DETENTION BASIN TOP OF BERM AND OVERFLOW WEIR GRADES) AND VOLUME (VERIFIED, SIGNED, & SEALED BY A PROFESSIONAL ENGINEER (PE) OR PROFESSIONAL LAND SURVEYOR (PLS)); ELEVATION, AND LOCATION (TIES TO TWO POINTS) OF ALL NEW STRUCTURES INCLUDING FIRE HYDRANTS, VALVE BOXES AND VAULTS, LINESTOP SLEEVEES, WATER SERVICE CORPORATION STOPS, WATER MAIN FITTINGS/BENDS, MANHOLES, SANITARY SERVICE WYES (MEASURED FROM DOWNSTREAM MANHOLE), ALL STORM/SANITARY SEWER STRUCTURES (INCLUDING INVERTS AND PIPE SIZES), ALL PIPES (LOCATIONS, SLOPES, LENGTHS, ETC.), OUTLET CONTROL STRUCTURES (INCLUDING RESTRICTOR SIZES AND ELEVATIONS PLUS TOP OF WALL) AND ABANDONED WATER OR SANITARY SERVICE LINES. DETAILED TOPOGRAPHIC SURVEY OF ALL HIGH POINTS, LOW POINTS, CHANGE OF SLOPE INCLUDING GUTTER GRADES, TOP OF CURB GRADES, PAVEMENT GRADES, SIDEWALK GRADES, RAMP GRADES, ETC. TO VERIFY POSITIVE DRAINAGE. ALL ELEVATIONS SHOULD BE REFERENCED TO THE SAME BENCHMARK DATUM AS THE ORIGINAL DESIGN PLANS. HORIZONTAL TIES SHALL BE REFERENCED TO LOT LINES, BACK OF CURB, OR PROPERTY CORNERS. WITHIN DETENTION/BMP AREAS: FOR VERIFICATION OF DETENTION VOLUME AND SUBBASE GRADES, PRIOR TO BACK FILLING WITH CA-7, THE CONTRACTOR SHALL PROVIDE ENGINEER WITH A CERTIFIED TOPO SURVEY OF AS-BUILT SUBBASE GRADES FOR ENGINEER APPROVAL AND ALSO A COPY OF RECEIPT OF THE CA-7 AGGREGATE.

NAPER SETTLEMENT

Wight

Wight & Company
wightco.com

2500 North Frontage Road
Darien, IL 60561

P 630.969.7000
F 630.969.7979

REV	DESCRIPTION	DATE
	ISSUED FOR RESUBMITTAL	10-23-20
	ISSUED FOR PERMIT	09-08-20

NAPER SETTLEMENT INNOVATION GATEWAY & AG CENTER

523 S. WEBSTER STREET
NAPERVILLE, IL 60540

UTILITY PLAN –INNOVATION GATEWAY

Project Number:
200081

Drawn By:
SC

Sheet:
C4.01

S:\Darien\Naper Settlement\200081_PUD Major Change Process\01\11 Drawings\02 CD\C4.01 – C4.03 UTILITY PLAN.dwg schen Oct 23, 2020 10:35:18 am
Wight © Copyright All rights reserved. No part of these documents may be reproduced, stored, or transmitted in any form or by any means, electronic, mechanical, photocopying, recording or otherwise, without the prior written consent of Wight.

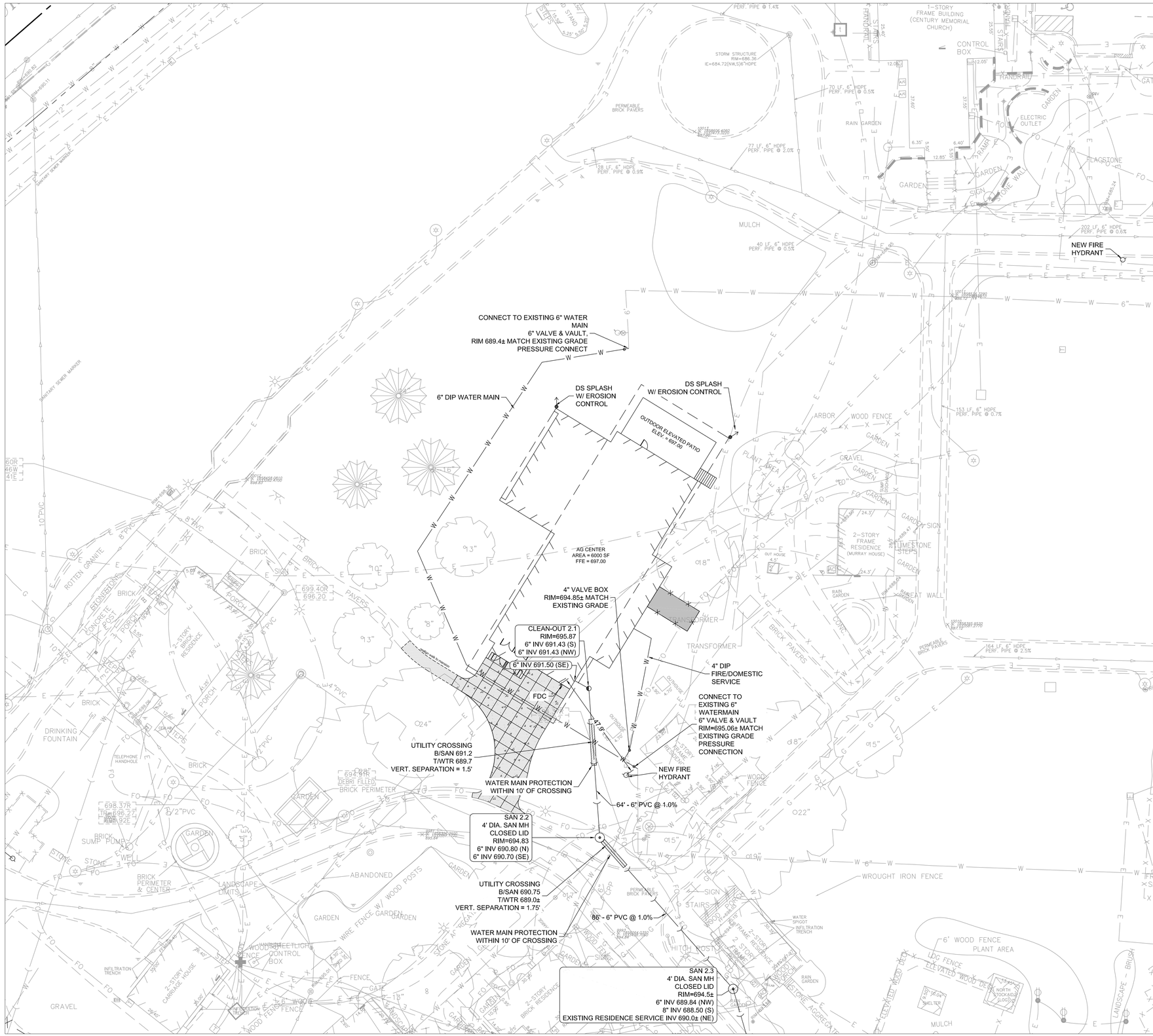

LEGEND

—W—W—	WATER MAIN
	STORM SEWER
	SANITARY SEWER
	UNDERDRAIN
—E—	ELECTRIC
—G—	GAS
●	CATCH BASIN
⊙	MANHOLE
◄	FLARED END SECTION
Ⓦ	WATER VAULT
	FIRE HYDRANT
	CLEANOUT
ATG	ADJUST STRUCTURE TO FINISHED GRADE
▨	WATER MAIN PROTECTION
▭	ROW RESTORATION

UTILITY NOTES:

1. CONTRACTOR TO VERIFY ALL EXISTING UTILITY LOCATIONS, SIZES, SLOPES, INVERTS, ETC. AND CONTACT ENGINEER IMMEDIATELY IF THERE ARE ANY CONFLICTS/DISCREPANCIES.
2. CONTRACTOR TO PROTECT ALL EXISTING UTILITIES.
3. ALL EXISTING UTILITY STRUCTURES SHALL BE ADJUSTED AS NECESSARY TO MATCH FINISH GRADE. ALL EXISTING UTILITY STRUCTURES REQUIRING ADJUSTMENT OR RECONSTRUCTION SHALL BE COMPLETED BY THE CONTRACTOR TO THE SATISFACTION OF THE UTILITY OWNER. ADJUSTMENTS AND/OR RECONSTRUCTIONS NOT CALLED FOR ON THE PLANS SHALL BE CONSIDERED INCIDENTAL TO THE CONTRACT. NO MORE THAN A TOTAL OF 12 INCHES OF ADJUSTING RINGS AND/OR 2 ADJUSTING RINGS SHALL BE ALLOWED.
4. CONTRACTOR TO COORDINATE ALL UTILITY CONNECTIONS AT THE BUILDING WITH THE MEP TO VERIFY CONNECTION LOCATION, PIPE SIZE, AND INVERT.
5. CONTRACTOR TO SEE MEP PLANS FOR ALL DETAILS, LOCATION, ROUTING, SIZE, ETC. REGARDING GAS, TELEPHONE, ELECTRIC, AND LIGHTING DESIGN. FOLLOW ALL REQUIREMENTS OF UTILITY PROVIDERS.

AS-BUILT NOTES:

THE CONTRACTOR IS RESPONSIBLE FOR ALL AS-BUILT SURVEYS. ALL AS-BUILT SURVEYS SHALL BE COMPLETED BY A PROFESSIONAL LAND SURVEYOR AND BE SIGNED AND SEALED. THE CONTRACTOR SHALL SUBMIT TWO SETS OF THE "AS-BUILT" FINAL ENGINEERING DRAWINGS (I.E. RECORD DRAWINGS) AND STORMWATER MANAGEMENT CALCULATIONS UPON COMPLETION OF IMPROVEMENTS AND INCLUDE ELECTRONIC CAD FILES. THE RECORD DRAWINGS SHOULD AT LEAST INCLUDE THE FOLLOWING INFORMATION: AS-BUILT DETENTION CONTOURS, ELEVATIONS (INCLUDING DETENTION BASIN TOP OF BERM AND OVERFLOW WEIR GRADES) AND VOLUME (VERIFIED, SIGNED, & SEALED BY A PROFESSIONAL ENGINEER (PE) OR PROFESSIONAL LAND SURVEYOR (PLS)); ELEVATION, AND LOCATION (TIES TO TWO POINTS) OF ALL NEW STRUCTURES INCLUDING FIRE HYDRANTS, VALVE BOXES AND VAULTS, LINESTOP SLEEVES, WATER SERVICE CORPORATION STOPS, WATER MAIN FITTINGS/BENDS, MANHOLES, SANITARY SERVICE WYES (MEASURED FROM DOWNSTREAM MANHOLE), ALL STORM/SANITARY SEWER STRUCTURES (INCLUDING INVERTS AND PIPE SIZES), ALL PIPES (LOCATIONS, SLOPES, LENGTHS, ETC.), OUTLET CONTROL STRUCTURES (INCLUDING RESTRICTOR SIZES AND ELEVATIONS PLUS TOP OF WALL) AND ABANDONED WATER OR SANITARY SERVICE LINES. DETAILED TOPOGRAPHIC SURVEY OF ALL HIGH POINTS, LOW POINTS, CHANGE OF SLOPE INCLUDING GUTTER GRADES, TOP OF CURB GRADES, PAVEMENT GRADES, SIDEWALK GRADES, RAMP GRADES, ETC. TO VERIFY POSITIVE DRAINAGE. ALL ELEVATIONS SHOULD BE REFERENCED TO THE SAME BENCHMARK DATUM AS THE ORIGINAL DESIGN PLANS. HORIZONTAL TIES SHALL BE REFERENCED TO LOT LINES, BACK OF CURB, OR PROPERTY CORNERS. WITHIN DETENTION/BMP AREAS: FOR VERIFICATION OF DETENTION VOLUME AND SUBBASE GRADES, PRIOR TO BACK FILLING WITH CA-7, THE CONTRACTOR SHALL PROVIDE ENGINEER WITH A CERTIFIED TOPO SURVEY OF AS-BUILT SUBBASE GRADES FOR ENGINEER APPROVAL AND ALSO A COPY OF RECEIPT OF THE CA-7 AGGREGATE.

NAPER SETTLEMENT

Wight

Wight & Company
wightco.com

2500 North Frontage Road
Darien, IL 60561

P 630.969.7000
F 630.969.7979

REV	DESCRIPTION	DATE
	ISSUED FOR RESUBMITTAL	10-23-20
	ISSUED FOR PERMIT	09-08-20

NAPER SETTLEMENT INNOVATION GATEWAY & AG CENTER

523 S. WEBSTER STREET
NAPERVILLE, IL 60540

UTILITY PLAN –AG CENTER

Project Number:
200081

Drawn By:
SC

Sheet:
C4.02

S:\Darien\Naper Settlement\200081_PUD Major Change Process\01\11 Drawings\02 CD\C4.01 – C4.03 UTILITY PLAN.dwg schen Oct 23, 2020 10:35:23 am
Wight © Copyright All rights reserved. No part of these documents may be reproduced, stored, or transmitted in any form or by any means, electronic, mechanical, photocopying, recording or otherwise, without the prior written consent of Wight.

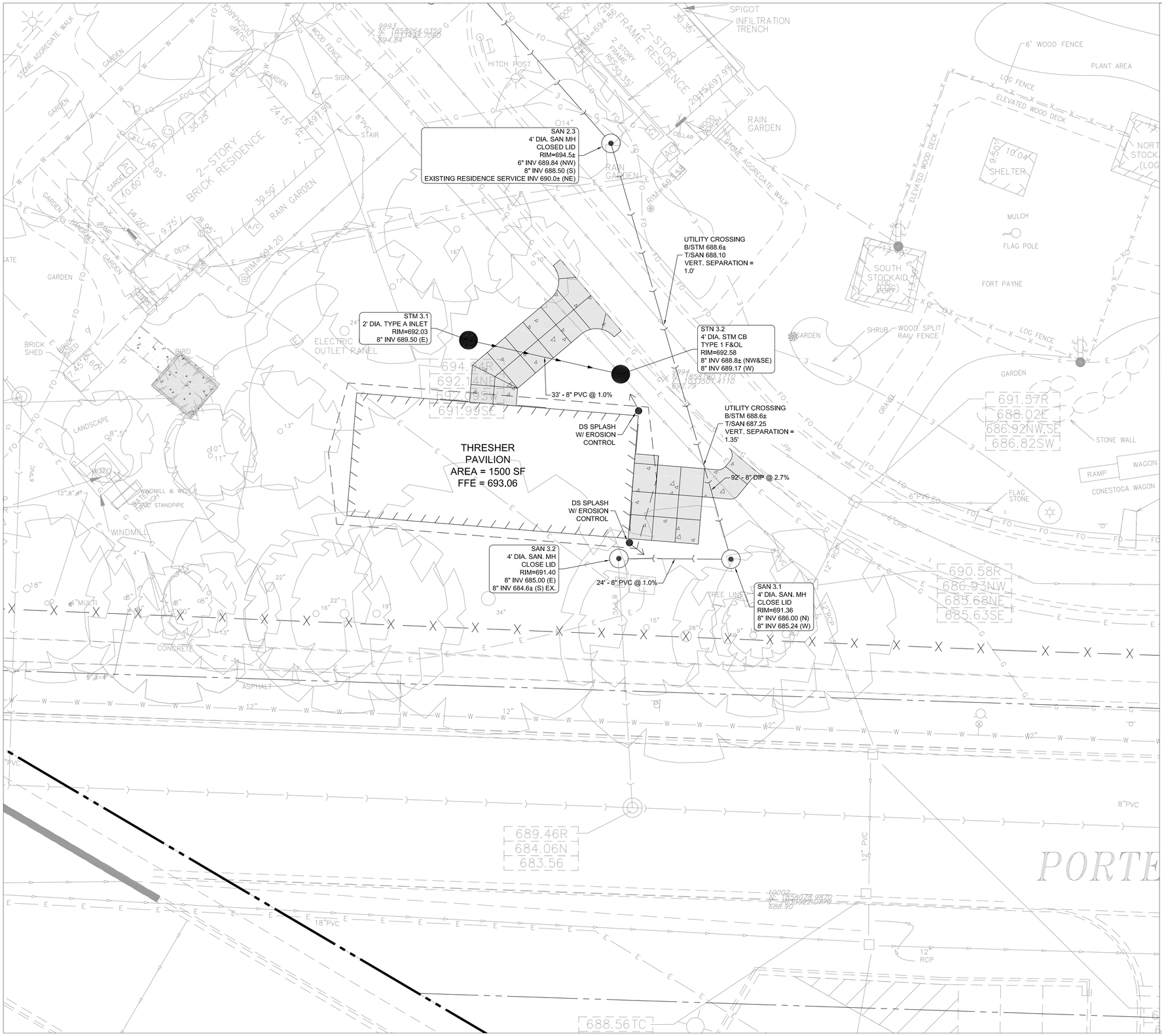

LEGEND

—W—W—	WATER MAIN
	STORM SEWER
	SANITARY SEWER
	UNDERDRAIN
—E—	ELECTRIC
—G—	GAS
●	CATCH BASIN
⊙	MANHOLE
◄	FLARED END SECTION
Ⓦ	WATER VAULT
	FIRE HYDRANT
	CLEANOUT
ATG	ADJUST STRUCTURE TO FINISHED GRADE
▨	WATER MAIN PROTECTION
▭	ROW RESTORATION

UTILITY NOTES:

1. CONTRACTOR TO VERIFY ALL EXISTING UTILITY LOCATIONS, SIZES, SLOPES, INVERTS, ETC. AND CONTACT ENGINEER IMMEDIATELY IF THERE ARE ANY CONFLICTS/DISCREPANCIES.
2. CONTRACTOR TO PROTECT ALL EXISTING UTILITIES.
3. ALL EXISTING UTILITY STRUCTURES SHALL BE ADJUSTED AS NECESSARY TO MATCH FINISH GRADE. ALL EXISTING UTILITY STRUCTURES REQUIRING ADJUSTMENT OR RECONSTRUCTION SHALL BE COMPLETED BY THE CONTRACTOR TO THE SATISFACTION OF THE UTILITY OWNER. ADJUSTMENTS AND/OR RECONSTRUCTIONS NOT CALLED FOR ON THE PLANS SHALL BE CONSIDERED INCIDENTAL TO THE CONTRACT. NO MORE THAN A TOTAL OF 12 INCHES OF ADJUSTING RINGS AND/OR 2 ADJUSTING RINGS SHALL BE ALLOWED.
4. CONTRACTOR TO COORDINATE ALL UTILITY CONNECTIONS AT THE BUILDING WITH THE MEP TO VERIFY CONNECTION LOCATION, PIPE SIZE, AND INVERT.
5. CONTRACTOR TO SEE MEP PLANS FOR ALL DETAILS, LOCATION, ROUTING, SIZE, ETC. REGARDING GAS, TELEPHONE, ELECTRIC, AND LIGHTING DESIGN. FOLLOW ALL REQUIREMENTS OF UTILITY PROVIDERS.

AS-BUILT NOTES:

THE CONTRACTOR IS RESPONSIBLE FOR ALL AS-BUILT SURVEYS. ALL AS-BUILT SURVEYS SHALL BE COMPLETED BY A PROFESSIONAL LAND SURVEYOR AND BE SIGNED AND SEALED. THE CONTRACTOR SHALL SUBMIT TWO SETS OF THE "AS-BUILT" FINAL ENGINEERING DRAWINGS (I.E. RECORD DRAWINGS) AND STORMWATER MANAGEMENT CALCULATIONS UPON COMPLETION OF IMPROVEMENTS AND INCLUDE ELECTRONIC CAD FILES. THE RECORD DRAWINGS SHOULD AT LEAST INCLUDE THE FOLLOWING INFORMATION: AS-BUILT DETENTION CONTOURS, ELEVATIONS (INCLUDING DETENTION BASIN TOP OF BERM AND OVERFLOW WEIR GRADES) AND VOLUME (VERIFIED, SIGNED, & SEALED BY A PROFESSIONAL ENGINEER (PE) OR PROFESSIONAL LAND SURVEYOR (PLS)); ELEVATION, AND LOCATION (TIES TO TWO POINTS) OF ALL NEW STRUCTURES INCLUDING FIRE HYDRANTS, VALVE BOXES AND VAULTS, LINESTOP SLEEVES, WATER SERVICE CORPORATION STOPS, WATER MAIN FITTINGS/BENDS, MANHOLES, SANITARY SERVICE WYES (MEASURED FROM DOWNSTREAM MANHOLE), ALL STORM/SANITARY SEWER STRUCTURES (INCLUDING INVERTS AND PIPE SIZES), ALL PIPES (LOCATIONS, SLOPES, LENGTHS, ETC.), OUTLET CONTROL STRUCTURES (INCLUDING RESTRICTOR SIZES AND ELEVATIONS PLUS TOP OF WALL) AND ABANDONED WATER OR SANITARY SERVICE LINES. DETAILED TOPOGRAPHIC SURVEY OF ALL HIGH POINTS, LOW POINTS, CHANGE OF SLOPE INCLUDING GUTTER GRADES, TOP OF CURB GRADES, PAVEMENT GRADES, SIDEWALK GRADES, RAMP GRADES, ETC. TO VERIFY POSITIVE DRAINAGE. ALL ELEVATIONS SHOULD BE REFERENCED TO THE SAME BENCHMARK DATUM AS THE ORIGINAL DESIGN PLANS. HORIZONTAL TIES SHALL BE REFERENCED TO LOT LINES, BACK OF CURB, OR PROPERTY CORNERS. WITHIN DETENTION/BMP AREAS: FOR VERIFICATION OF DETENTION VOLUME AND SUBBASE GRADES, PRIOR TO BACK FILLING WITH CA-7, THE CONTRACTOR SHALL PROVIDE ENGINEER WITH A CERTIFIED TOPO SURVEY OF AS-BUILT SUBBASE GRADES FOR ENGINEER APPROVAL AND ALSO A COPY OF RECEIPT OF THE CA-7 AGGREGATE.

NORTH

GRAPHIC SCALE

10 0 5 10 20

1 INCH = 10 FEET

NAPER SETTLEMENT

Wight

Wight & Company
wightco.com

2500 North Frontage Road
Darien, IL 60561

P 630.969.7000
F 630.969.7979

REV	DESCRIPTION	DATE
	ISSUED FOR RESUBMITTAL	10-23-20
	ISSUED FOR PERMIT	09-08-20

NAPER SETTLEMENT INNOVATION GATEWAY & AG CENTER

523 S. WEBSTER STREET
NAPERVILLE, IL 60540

UTILITY PLAN –THRESHER PAVILION

Project Number:
200081

Drawn By:
SC

Sheet:
C4.03

S:\Darien\Naper Settlement\200081_PUD Major Change Process\01\11 Drawings\02 CD\C4.01 – C4.03 UTILITY PLAN.dwg schen Oct 23, 2020 11:00:37 am

Wight © Copyright All rights reserved. No part of these documents may be reproduced, stored, or transmitted in any form or by any means, electronic, mechanical, photocopying, recording or otherwise, without the prior written consent of Wight.

1 PCC SIDEWALK
SCALE: 1"=1'-0"

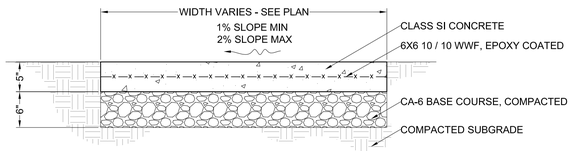

NOTES:
1. ALL SIDEWALKS SHALL BE CONSTRUCTED WITH IDOT CLASS SI CONCRETE, NOT LESS THAN 3500 P.S.I. CONCRETE AT 14 DAYS.
2. SIDEWALK THICKNESS CROSS DRIVEWAY SHALL BE A MINIMUM 8".
3. REFER TO EXPANSION JOINT DETAIL
4. THE TRANSVERSE JOINTS SHALL EXTEND TO 1/4 THE DEPTH OF THE SIDEWALK, SHALL NOT BE MORE THAN 1/4" IN WIDTH, AND SHALL BE EDGED HAVING A 1/4 INCH RADIUS. NO SLAB SHALL BE LONGER THAN 6 FEET NOR LESS THAN 4 FEET ON ANY ONE SIDE.

2 HEAVY DUTY CONCRETE PAVEMENT
SCALE: 1"=1'-0"

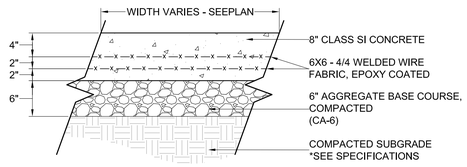

NOTES:
1. PROVIDE CONTRACTION JOINT EVERY 10' O.C.
2. PROVIDE EXPANSION JOINT AT LOCATIONS WHERE NEW CONCRETE POURS BEGIN/END.

3 JOINT DETAILS
SCALE: NTS

EXPANSION JOINT

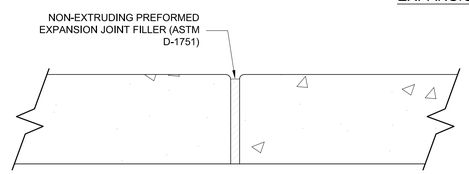

NOTES:
1. PREFORMED FLEXIBLE FOAM EXPANSION JOINT FILLER NOT ACCEPTED.
2. EXPANSION JOINTS $\frac{3}{4}$" THICK SHALL BE WHERE PROPOSED CONCRETE MEETS EXISTING CONCRETE, AT 50 FT INTERVALS FOR HAND POURS AND 100 FT INTERVALS FOR SLIP OR MONOLITHIC POURS.
3. EXPANSION JOINTS, $\frac{1}{4}$" THICK SHALL BE AT EVERY P.C. & P.T. OF CURVATURE, 5 FT EACH SIDE OF STRUCTURES, AND AT END OF POURS.
4. PREFORMED EXPANSION JOINT 1/2" THICK SHALL BE PLACED BETWEEN THE SIDEWALK AND ALL STRUCTURES
5. EXPANSION JOINTS SHALL ALSO BE PLACED WHERE THE SIDEWALK ABUTS EXISTING SIDEWALKS AND WHERE THE SIDEWALK ABUTS A CURB

CONTROL JOINT

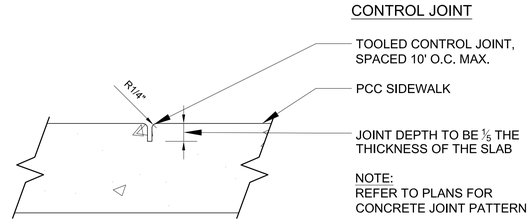

NOTE:
REFER TO PLANS FOR CONCRETE JOINT PATTERN

4 FLUSH CONCRETE CONTAINMENT CURB

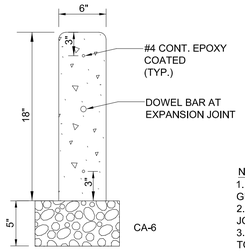

NOTES:
1. REFER TO CURB AND GUTTER DETAIL FOR NOTES
2. REFER TO EXPANSION JOINT DETAIL FOR NOTES
3. ALL DOWELS AND REBAR TO BE EPOXY COATED.

5 DETECTABLE WARNING
SCALE: NTS

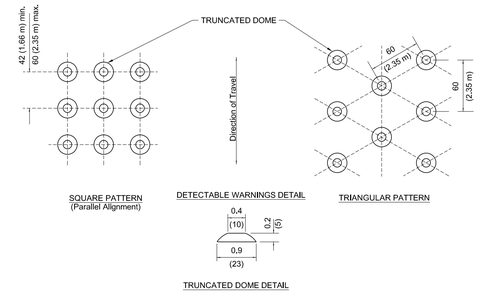

6 B6.12 CURB AND GUTTER
SCALE: 1"=1'-0"

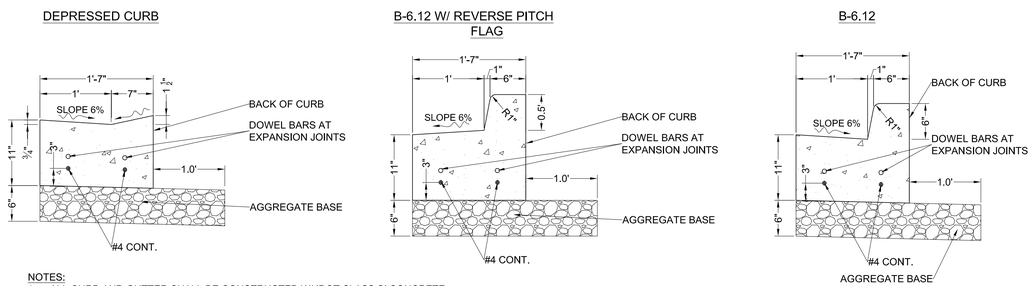

NOTES:
1. ALL CURB AND GUTTER SHALL BE CONSTRUCTED W/ IDOT CLASS SI CONCRETE.
2. REFER TO EXPANSION JOINT DETAIL.
3. CONSTRUCTION JOINTS SHALL BE AT 20 OR 25 FT. INTERVALS DEPENDING ON TYPE OF POUR. REFER TO EXPANSION JOINT DETAIL.
4. JOINTS SHALL BE CONSTRUCTED IN COMPLIANCE WITH IDOT STANDARDS & DETAILS.
5. ALL CURB AND GUTTER SHALL BE DOWELED INTO EXISTING CURB AND GUTTER THAT HAS BEEN SAWCUT AND REMOVED.
6. ALL DOWELS AND REBAR TO BE EPOXY COATED.

7 FROST STOOP

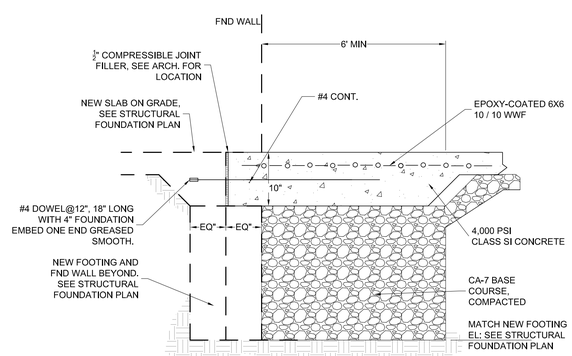

NOTES:
1. FROST STOOP TO EXTEND ENTIRE WIDTH OF ALL DOORS AT A MINIMUM.
2. ALL DOWELS AND REBAR TO BE EPOXY COATED.

8 BRICK PAVER SECTION

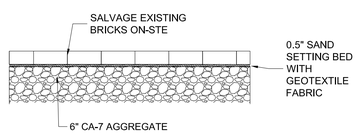

NAPER SETTLEMENT

Wight

Wight & Company
wightco.com

2500 North Frontage Road
Darien, IL 60561

P 630.969.7000
F 630.969.7979

REV	DESCRIPTION	DATE
	ISSUED FOR RESUBMITTAL	10-23-20
	ISSUED FOR PERMIT	09-08-20

NAPER SETTLEMENT INNOVATION GATEWAY & AG CENTER

523 S. WEBSTER STREET
NAPERVILLE, IL 60540

CIVIL DETAILS

Project Number:
200081

Drawn By:
SC

Sheet:
C5.00

S:\Darien\Naper Settlement\200081_PUD Major Change Process\01\11 Drawings\02 CD\C5.00 CIVIL DETAILS.dwg schen Oct 23, 2020 10:35:39 am
Wight © Copyright All rights reserved. No part of these documents may be reproduced, stored, or transmitted in any form or by any means, electronic, mechanical, photocopying, recording or otherwise, without the prior written consent of Wight.

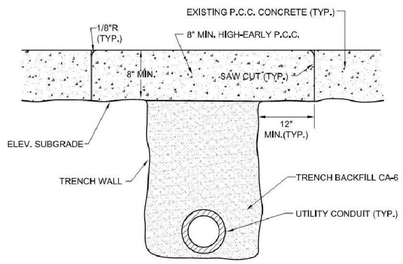

NOTES:

1. THE TRENCH SHALL BE BACKFILLED WITH AGGREGATE (CA-6) AND COMPACTED TO 95% OF THE STANDARD PROCTOR DENSITY. TRENCH SPOILS OR EXCAVATED MATERIAL SHALL BE DISCARDED BY THE CONTRACTOR, AT HIS EXPENSE, AT DUMP SITES OR IN A SUITABLE FASHION AS APPROVED BY THE CITY ENGINEER.
2. PRIOR TO PLACING OF P.C.C. CONCRETE, THE EXPOSED EDGES OF ALL EXISTING PAVEMENT SHALL BE SAW CUT TO PROVIDE A SMOOTH, CLEAN EDGE, FREE OF LOOSE MATERIAL.
3. EXCAVATIONS SHALL BE PROTECTED BY BARRICADES WITH FLASHING LIGHTS. A 1" STEEL PLATE SHALL BE PROVIDED AND MAINTAINED BY THE CONTRACTOR AT LOCATIONS WHERE ADJUSTMENTS ARE LOCATED IN TRAVEL LANES UNTIL THE SURFACE RESTORATION IS COMPLETE. THE PLATE SHALL BE PROTECTED FROM SLIDING AND PROVIDED WITH BITUMINOUS RAMPS.
4. TRENCH TO BE COMPACTED IN CONFORMANCE WITH ARTICLE 603.08 OF THE IDOT STANDARD SPECIFICATIONS FOR ROAD AND BRIDGE CONSTRUCTION.

City of Naperville STANDARD DETAIL | UTILITY TRENCH PAVING SECTION (RIGID PAVEMENTS) | REVISED: 01/01/2013 | SHEET 1 OF 1 | PAVEMENT 12 | 590.12

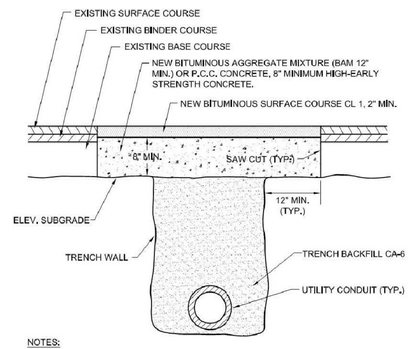

NOTES:

1. THE TRENCH SHALL BE BACKFILLED WITH AGGREGATE (CA-6) AND COMPACTED TO 95% OF THE STANDARD PROCTOR DENSITY. TRENCH SPOILS OR EXCAVATED MATERIAL SHALL BE DISCARDED BY THE CONTRACTOR, AT HIS EXPENSE, AT DUMP SITES OR IN A SUITABLE FASHION AS APPROVED BY THE CITY ENGINEER.
2. PRIOR TO PLACING OF P.C.C. CONCRETE, THE EXPOSED EDGES OF ALL EXISTING PAVEMENT SHALL BE SAW CUT TO PROVIDE A SMOOTH, CLEAN EDGE, FREE OF LOOSE MATERIAL.
3. EXCAVATIONS SHALL BE PROTECTED BY BARRICADES WITH FLASHING LIGHTS. A 1" STEEL PLATE SHALL BE PROVIDED AND MAINTAINED BY THE CONTRACTOR AT LOCATIONS WHERE ADJUSTMENTS ARE LOCATED IN TRAVEL LANES UNTIL THE SURFACE RESTORATION IS COMPLETE. THE PLATE SHALL BE PROTECTED FROM SLIDING AND PROVIDED WITH BITUMINOUS RAMPS.
4. TRENCH TO BE COMPACTED IN CONFORMANCE WITH ARTICLE 603.08(METHOD 3) OF THE IDOT STANDARD SPECIFICATIONS FOR ROAD AND BRIDGE CONSTRUCTION.

City of Naperville STANDARD DETAIL | UTILITY TRENCH PAVING SECTION (FLEXIBLE PAVEMENTS) | REVISED: 01/01/2013 | SHEET 1 OF 1 | PAVEMENT 13 | 590.13

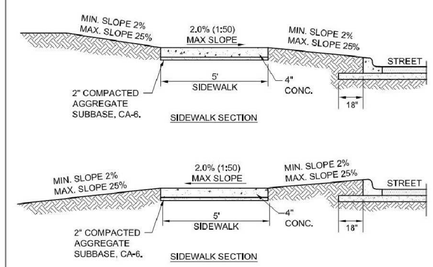

NOTES:

1. CONCRETE SHALL BE IDOT CLASS SI.
2. MINIMUM SIDEWALK THICKNESS SHALL BE 4".
3. SIDEWALK THICKNESS ACROSS DRIVEWAYS SHALL BE AT A MINIMUM 6" FOR RESIDENTIAL DRIVEWAYS AND 8" FOR COMMERCIAL DRIVEWAYS.
4. MAXIMUM LONGITUDINAL SLOPE SHALL NOT EXCEED 5% (20:1). FOR ANY SLOPE IN EXCESS OF 5%, ALL REQUIREMENTS OF THE ILLINOIS ACCESSIBILITY CODE (LATEST EDITION) SHALL BE MET.
5. MINIMUM TRANSVERSE SLOPE SHALL BE 1.0% (1:100). MAXIMUM TRANSVERSE SLOPE SHALL BE 2.0% (1:50).
6. A MINIMUM 2" AGGREGATE SUBBASE (CA-6) SHALL BE PROVIDED. (4" THROUGH COMMERCIAL DRIVEWAYS).
7. AGGREGATE SUBBASE SHALL BE MECHANICALLY COMPACTED.
8. ALL SIDEWALKS SHALL BE PROMPTLY BACKFILLED AND PROTECTED FROM DAMAGE.
9. SIDEWALK CONSTRUCTION SHALL FOLLOW APPLICABLE IDOT STANDARDS.
10. SIDEWALKS SHALL FOLLOW CURRENT ADA GUIDELINES.

City of Naperville STANDARD DETAIL | SIDEWALK | REVISED: 01/01/2013 | SHEET 1 OF 1 | PAVEMENT 30 | 590.30

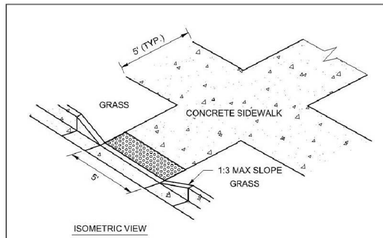

NOTES:

1. ALL AGGREGATE SUB-BASE SHALL BE MECHANICALLY COMPACTED.
2. SIDEWALK THICKNESS AT CURB RAMPS SHALL BE A MINIMUM OF 6" PCC ON 2" AGGREGATE SUB BASE.
3. SIDEWALK CONSTRUCTION SHALL FOLLOW APPL CABLE IDOT STANDARDS.
4. SIDEWALKS SHALL FOLLOW CURRENT ADA GUIDELINES.

APPLICABLE IDOT STANDARD DETAILS (USE LATEST REVISION:

424001-XX	PERPENDICULAR CURB RAMPS FOR SIDEWALKS
424006-XX	DIAGONAL CURB RAMPS FOR SIDEWALKS
424011-XX	CORNER PARALLEL CURB RAMPS FOR SIDEWALKS
424016-XX	MID-BLOCK CURB RAMPS FOR SIDEWALKS
424021-XX	DEPRESSED CORNER FOR SIDEWALKS
424026-XX	ENTRANCE/ALLEY PEDESTRIAN CROSSINGS
424031-XX	MEDIAN PEDESTRIAN CROSSINGS
606001-XX	CONCRETE CURB TYPE B AND CONB CONCRETE CURB AND GUTTER

APPROVED ADA DETECTABLE WARNING TILES:

1. ADA SOLUTIONS - CAST IN PLACE REPLACEABLE
2. ARMOR TILE - CAST IN PLACE
3. DETECTILE - SLIMTEK II
4. TUFTILE - POLYMER WET-SET

City of Naperville STANDARD DETAIL | CURB RAMPS | REVISED: 08/01/2016 | SHEET 1 OF 1 | PAVEMENT 32 | 590.32

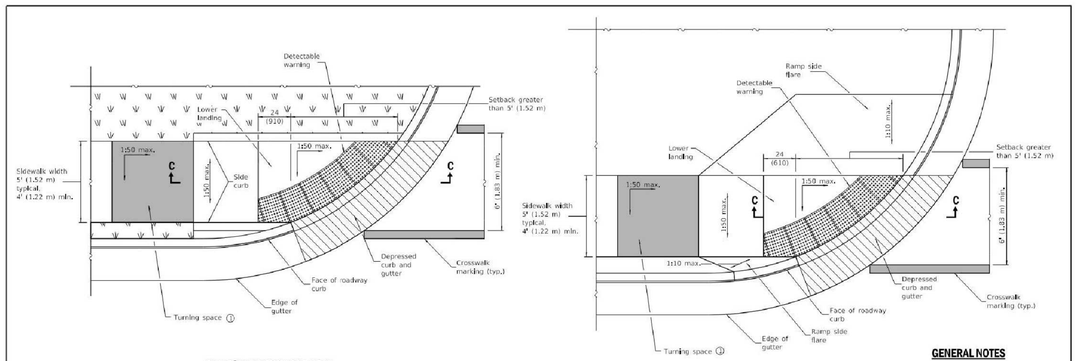

RAMP IN LANDSCAPED AREA SETBACK > 5'

RAMP IN PAVED AREA SETBACK > 5'

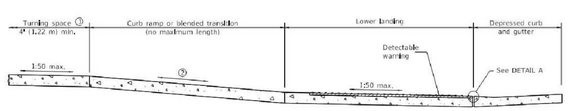

SECTION C-C

① This turning space not required for blended transition.

② The running slope of a curb ramp shall be 1:20 min. and 1:12 max. The running slope of a blended transition shall be 1:20 max.

GENERAL NOTES

All slope ratios are expressed as units of vertical displacement to units of horizontal displacement (V:H).

Where the turning space is constrained on a side opposite a ramp, the minimum length of the turning space in the direction of the ramp-run shall be 5' (1.52 m).

Where 1:50 maximum slope is shown, 1:64 is preferred.

Detectable warnings are shown in their ideal locations but the following placement tolerances are allowed.

Side Border - Detectable warnings should extend the full width of the walking surface (excluding flared sides) but a border along each side up to 2 in. (50 mm) in width is allowed.

Curb Set-Back - Detectable warnings located at the back of curb should closely align with the curb but a gap up to 6 in. (150 mm) behind the curb is allowed.

See Standard 606001 for details of depressed curb adjacent to curb ramp.

All dimensions are in inches (millimeters) unless otherwise shown.

Illinois Department of Transportation
PASSED January 1, 2019
ENGINEER OF POLICY AND PROCEDURES
APPROVED January 1, 2019
ENGINEER OF BRIDGE AND ENVIRONMENT
EFFECTIVE: 01-01-19

PERPENDICULAR CURB RAMPS FOR SIDEWALKS
(Sheet 2 of 2)
STANDARD 424001-11

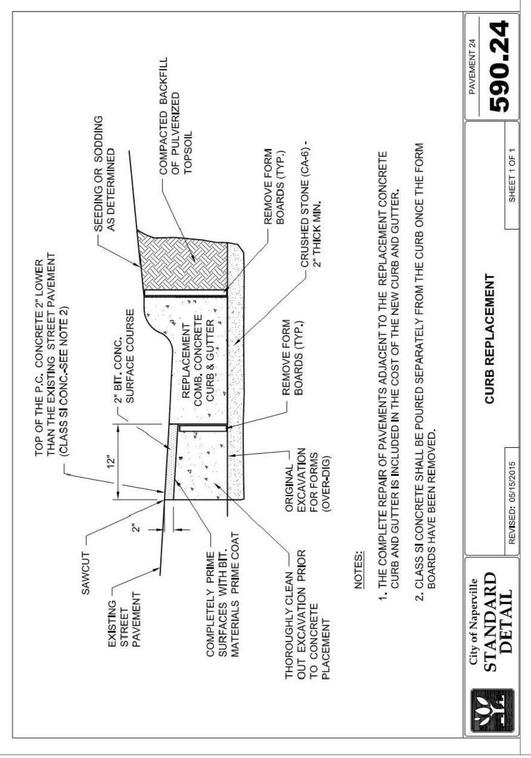

NOTES:

1. THE COMPLETE REPAIR OF PAVEMENTS ADJACENT TO THE REPLACEMENT CONCRETE CURB AND GUTTER IS INCLUDED IN THE COST OF THE NEW CURB AND GUTTER.
2. CLASS SI CONCRETE SHALL BE POURED SEPARATELY FROM THE CURB ONCE THE FORM BOARDS HAVE BEEN REMOVED.

City of Naperville STANDARD DETAIL | CURB REPLACEMENT | REVISED: 06/15/2015 | SHEET 1 OF 1 | PAVEMENT 24 | 590.24

① CONCRETE SEAT WALL
SCALE: 1"=1'-0"

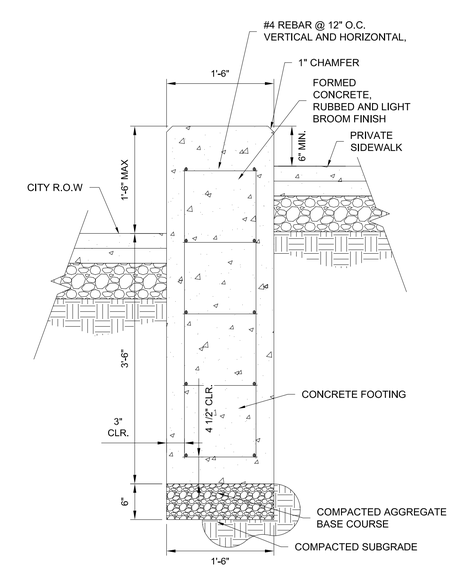

SECTION
SEE DETAILED GRADING ON GRADING PLAN

NAPER SETTLEMENT

Wight

Wight & Company
wightco.com

2500 North Frontage Road
Darien, IL 60561

P 630.969.7000
F 630.969.7979

REV	DESCRIPTION	DATE
	ISSUED FOR RESUBMITTAL	10-23-20
	ISSUED FOR PERMIT	09-08-20

NAPER SETTLEMENT
INNOVATION GATEWAY
& AG CENTER

523 S. WEBSTER STREET
NAPERVILLE, IL 60540

CIVIL DETAILS

Project Number:
200081
Drawn By:
SC
Sheet:

C5.01

S:\Dorien\Naper Settlement\200081_PUD Major Change Process\01\11 Drawings\02 CD\C5.00 CIVIL DETAILS.dwg schen Oct 23, 2020 10:35:43 am
Wight © Copyright All rights reserved. No part of these documents may be reproduced, stored, or transmitted in any form or by any means, electronic, mechanical, photocopying, recording or otherwise, without the prior written consent of Wight.

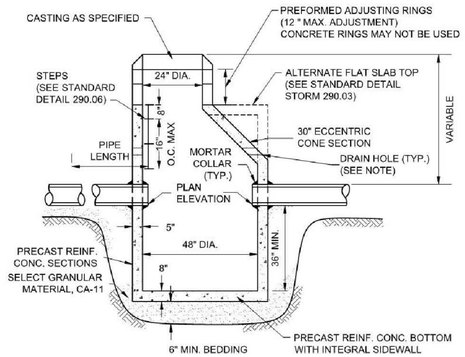

NOTE:

A MINIMUM OF 4 PRECAST OR DRILLED 1" DIAMETER HOLES SHALL BE PROVIDED WITHIN 1' OF THE LOWEST PIPE INVERT. THE HOLES SHALL BE DISTRIBUTED EQUIDISTANT AROUND THE PERIMETER OF THE STRUCTURE. A 1' BY 1' SQUARE OF UNDERDRAIN FILTER CLOTH MATERIAL SHALL BE FIXED OVER EACH DRAIN HOLE ON THE OUTSIDE OF THE STRUCTURE WITH MASTIC MATERIAL TO PREVENT SLIPPAGE DURING BACKFILLING.

City of Naperville STANDARD DETAIL	CATCH BASIN - TYPE A	STORM 2
	REVISED: 08/01/2018 SHEET 1 OF 1	290.02

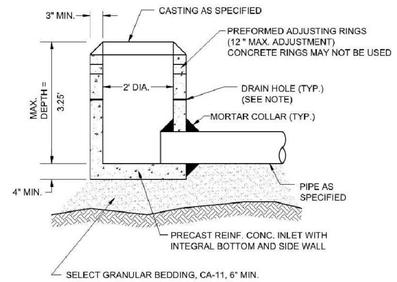

NOTE:

IN PAVED AREAS A MINIMUM OF 4 PRECAST OR DRILLED 1" DIAMETER HOLES SHALL BE PROVIDED WITHIN 1' OF THE LOWEST PIPE INVERT. THE HOLES SHALL BE DISTRIBUTED EQUIDISTANT AROUND THE PERIMETER OF THE STRUCTURE. A 1' BY 1' SQUARE OF UNDERDRAIN FILTER CLOTH MATERIAL SHALL BE FIXED OVER EACH DRAIN HOLE ON THE OUTSIDE OF THE STRUCTURE WITH MASTIC MATERIAL TO PREVENT SLIPPAGE DURING BACKFILLING.

City of Naperville STANDARD DETAIL	INLET - TYPE A	STORM 5
	REVISED: 08/01/2018 SHEET 1 OF 1	290.05

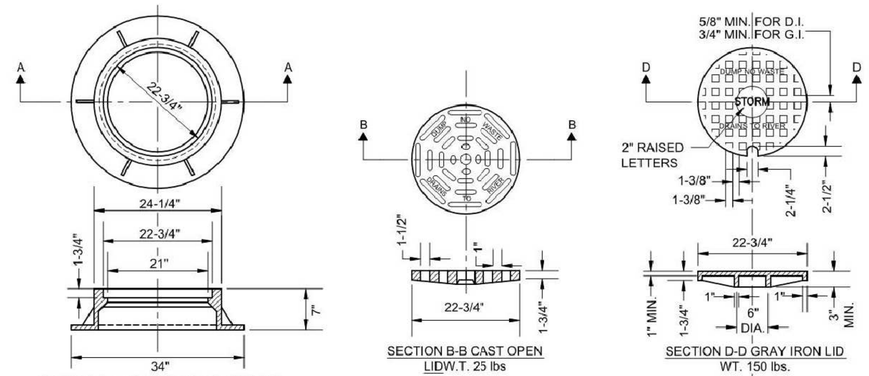

NOTES:

1. FRAME AND GRATE (LID) SHALL BE NEENAH R-2502 FOR OPEN GRATES, R-1772 FOR CLOSED LIDS; EAST JORDAN 1022-2 WITH M-1 GRATE OR TYPE A SOLID COVER, OR EQUAL APPROVED BY THE CITY ENGINEER.
2. ALL LIDS AND COVERS SHALL HAVE MACHINED SURFACES AND SEATS.
3. ALL CASTINGS SHALL BE SHOP PAINTED WITH AN ASPHALTIC BASE PAINT.
4. ALL CASTINGS SHALL INCLUDE "DUMP NO WASTE. DRAINS TO RIVER".

City of Naperville STANDARD DETAIL	FRAME & LID OR GRATE	STORM 10
	REVISED: 05/15/2015 SHEET 1 OF 1	290.10

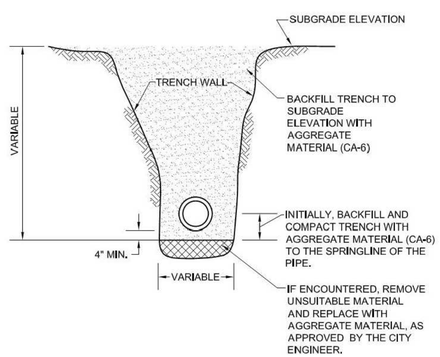

NOTES:

1. TRENCH BACKFILL MATERIAL SHALL BE COMPACTED IN ACCORDANCE WITH SECTION 550.07 OF THE IDOT STANDARD SPECIFICATIONS FOR ROAD AND BRIDGE CONSTRUCTION.
2. THIS DETAIL SHALL BE USED WHEREVER THE TRENCH IS MADE IN THE PROPOSED ROADWAY SUBGRADE, AND WHEREVER THE INNER EDGE OF THE TRENCH IS CLOSER THAN 2' TO THE EDGE OF THE PROPOSED PAVEMENT, CURB AND GUTTER, AND SIDEWALK.

City of Naperville STANDARD DETAIL	STORM SEWER TRENCH SECTION IN PAVED AREAS	STORM 20
	REVISED: 01/01/2013 SHEET 1 OF 1	290.20

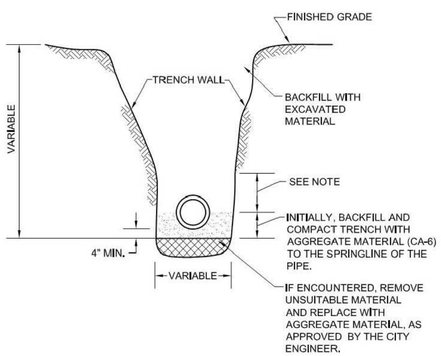

NOTE:

FOR PVC AND HDPE PIPE, BACKFILL WITH AGGREGATE MATERIAL (CA-6) TO 6" ABOVE THE TOP OF PIPE.

City of Naperville STANDARD DETAIL	STORM SEWER TRENCH SECTION IN NON-PAVED AREAS	STORM 21
	REVISED: 01/01/2013 SHEET 1 OF 1	290.21

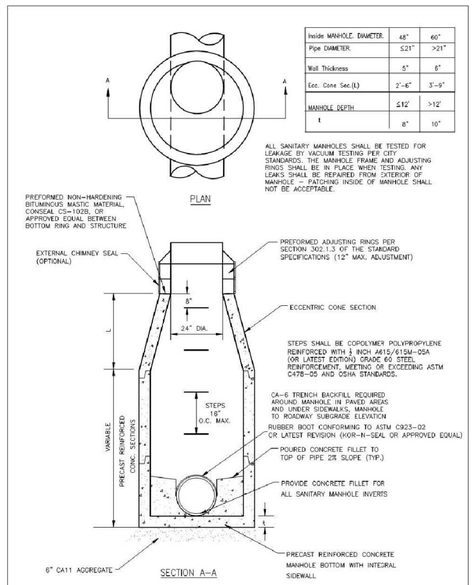

City of Naperville STANDARD DETAIL	SANITARY SEWER MANHOLE	SANITARY 1
	REVISED: 08/01/2018 SHEET 1 OF 1	390.01

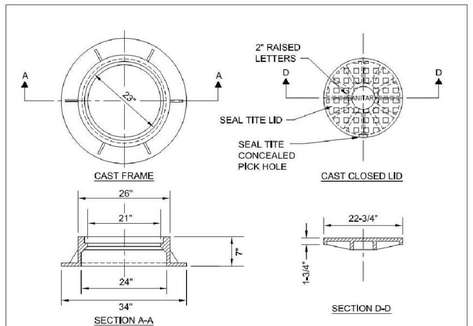

NOTES:

1) DUCTILE IRON SHALL BE GRADE 65-45-12 AND SHALL BE TESTED IN ACCORDANCE WITH FEDERAL SPECIFICATIONS.

2) ALL FRAMES AND COVERS SHALL HAVE MACHINED HORIZONTAL AND VERTICAL BEARING SURFACES. PICK HOLES SHALL NOT CREATE OPENINGS IN THE COVER.

3) THE MANHOLE COVERS SHALL HAVE 2" RAISED LETTERS AS SHOWN.

4) ALTERNATIVE TO DUCTILE IRON LID, GREY IRON CL 35 LID MAY BE USED.

5) CASTINGS ARE SHALL BE EAST JORDAN 1022-Z3; NEENAH R-1772 OR APPROVED EQUAL.

6) WATERPROOF, BOLTDOWN FRAME AND COVER SHALL BE USED IN FLOOD PLAIN AREA, AND AS NOTED ON THE PLANS. NEENAH R-1916-F1, EAST JORDAN IRON WORKS 1022-Z1PT OR APPROVED EQUAL.

7. LIDS AND FRAMES TO MEET ASSHTO M306 PROOF LOADING SPECIFICATIONS

City of Naperville STANDARD DETAIL	SANITARY MANHOLE - FRAME & COVER	SANITARY 6
	REVISED: 01/01/2013 SHEET 1 OF 1	390.06

NAPER SETTLEMENT

Wight

Wight & Company
wightco.com

2500 North Frontage Road
Darien, IL 60561

P 630.969.7000
F 630.969.7979

REV	DESCRIPTION	DATE
	ISSUED FOR RESUBMITTAL	10-23-20
	ISSUED FOR PERMIT	09-08-20

NAPER SETTLEMENT INNOVATION GATEWAY & AG CENTER

523 S. WEBSTER STREET
NAPERVILLE, IL 60540

CIVIL DETAILS

Project Number:
200081
Drawn By:
SC
Sheet:

C5.02

S:\Darien\Naper Settlement\200081_PUD Major Change Process\01\11 Drawings\02 CD\C5.00 CIVIL DETAILS.dwg schen Oct 23, 2020 10:35:48 am
Wight © Copyright All rights reserved. No part of these documents may be reproduced, stored, or transmitted in any form or by any means, electronic, mechanical, photocopying, recording or otherwise, without the prior written consent of Wight.

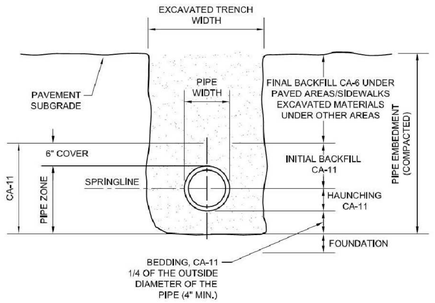

NOTES:

1. IN PAVED AREAS, ALL TRENCHES MUST BE COMPACTED IN CONFORMANCE WITH SECTION 550.07 OF THE IDOT STANDARD SPECIFICATIONS FOR ROAD & BRIDGE CONSTRUCTION.
2. IF FOUNDATION IS UNSUITABLE TO BED PIPE, UNDERCUTS MAY BE REQUIRED AS DIRECTED BY THE ENGINEER.

City of Naperville STANDARD DETAIL | TRENCH SECTION FOR PVC PIPE | REVISED: 01/01/2013 | SHEET 1 OF 1 | SANITARY 10 | 390.10

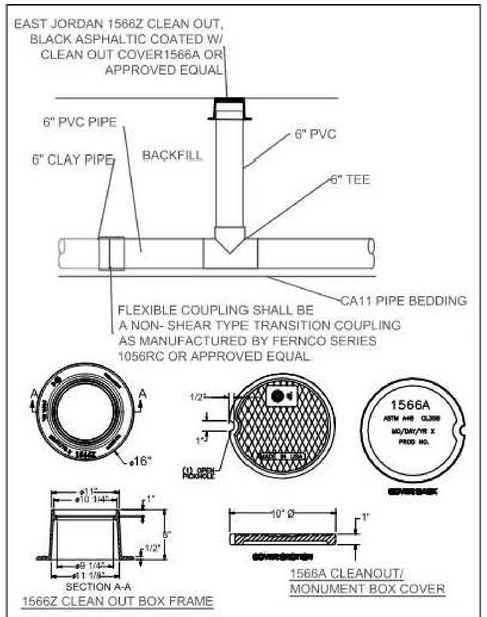

City of Naperville STANDARD DETAIL | SANITARY SEWER CLEANOUT | EFFECTIVE: 1/15/2020 | SHEET 1 OF 1 | SAN 23 | 390.23

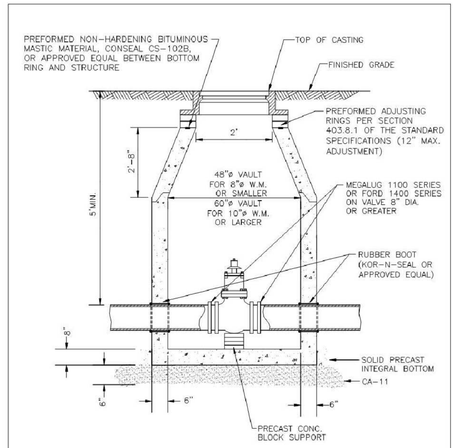

1. VALVE MUST ALIGN WITH THE CENTER OF VAULT OPENINGS.
2. CONCENTRIC CONES TO BE USED FOR VALVES 12" AND SMALLER.
3. VALVES SHALL BE RESILIENT WEDGE GATE VALVES WITH MECHANICAL JOINT ENDS TO COMPLY WITH ANSI/AWWA C515-09 OR LATEST VERSION VALVES TO BE CLOW, AMERICAN, WATEROUS, KENNEDY OR APPROVED EQUAL.

City of Naperville STANDARD DETAIL | VALVE VAULT | REVISED: 08/01/2018 | SHEET 1 OF 1 | WATER 1 | 490.01

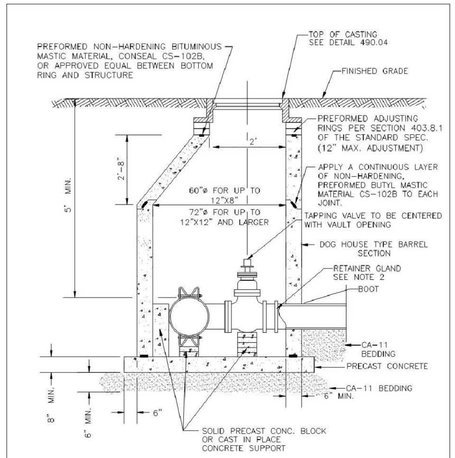

1. USE MEGALUG SERIES 1100 OR FORD UNI-FLANGE SERIES 1400 RETAINER GLANDS WITH STAINLESS STEEL T-BOLTS COATED WITH ANTI-SIEZE COMPOUND.
2. TAPPING SLEEVES SHALL BE HEAVY DUTY STAINLESS STEEL WITH STAINLESS STEEL BOLTS AND NUTS (ROMAC INDUSTRIES SST III, CASCADE CST-EX, FORD FTSS).
3. EXISTING PIPE TO BE DISINFECTED PRIOR TO INSTALLATION OF TAPPING SLEEVE AND TAPPING SLEEVE IS TO BE PRESSURE TESTED TO OPERATING PRESSURE PLUS 50 PERCENT PRIOR TO MAKING PRESSURE CONNECTION.
4. DO NOT USE STAINLESS STEEL SLEEVE ON SIZE ON SIZE TAPS OR PIPES LARGER THAN 12" DIAMETER.
5. IN THE EVENT IT IS NECESSARY TO USE A PRECAST SPLIT BOTTOM FLOOR DUE TO SPACE CONSTRAINTS THE FLOOR MUST BE GROUTED WATER TIGHT.
6. TAPPING VALVES SHALL CONFORM TO C515-09: AMERICAN SERIES 2500 RESILIENT WEDGE TAPPING VALVES WITH FLANGED X MECHANICAL JOINT ENDS OR APPROVED EQUAL.

City of Naperville STANDARD DETAIL | VALVE VAULT WITH STAINLESS STEEL SLEEVE PRESSURE TAP | REVISED: 01/01/2013 | SHEET 1 OF 1 | WATER 3 | 490.03

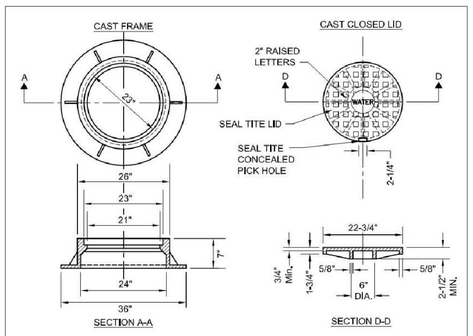

NOTES:

1. DUCTILE IRON SHALL BE GRADE 65-45-12 AND SHALL BE TESTED IN ACCORDANCE WITH FEDERAL SPECIFICATIONS.
2. ALL FRAMES AND COVERS SHALL HAVE MACHINED HORIZONTAL AND VERTICAL BEARING SURFACES. PICK HOLES SHALL NOT CREATE OPENINGS IN THE COVER.
3. THE MANHOLE COVERS SHALL HAVE RAISED LETTERS AS SHOWN.
4. ALTERNATIVE TO DUCTILE IRON LID, GREY IRON CL 35 LID MAY BE USED.
5. DIMENSIONS FOR CASTINGS ARE COMPARABLE TO EAST JORDAN 1022 OR NEENAH R-1772-C, HEAVY DUTY.
6. LIDS AND FRAMES TO MEET AASHTO M306 PROOF LOADING SPECIFICATIONS.

City of Naperville STANDARD DETAIL | VALVE VAULT - FRAME & COVER | REVISED: 01/01/2013 | SHEET 1 OF 1 | WATER 4 | 490.04

NOTES:

1. CHAIN AND CHAIN HOOKS SHALL BE REMOVED FROM HYDRANT
2. HYDRANT SHALL BE FACTORY PAINTED WITH 2 COATS OF TNEMEC VERSATONE 82 HS (OR APPROVED EQUAL) SAFETY ORANGE
3. ALL FASTENERS/HARDWARE BELOW GRADE SHALL BE STAINLESS STEEL. (GRADE 304 MIN.)

PERMITTED TYPES:
-WATEROUS PACER WB-67 5-1/4"
-CLOW MEDALLION 5-1/4"
-MUELLER A-423 5-1/4"

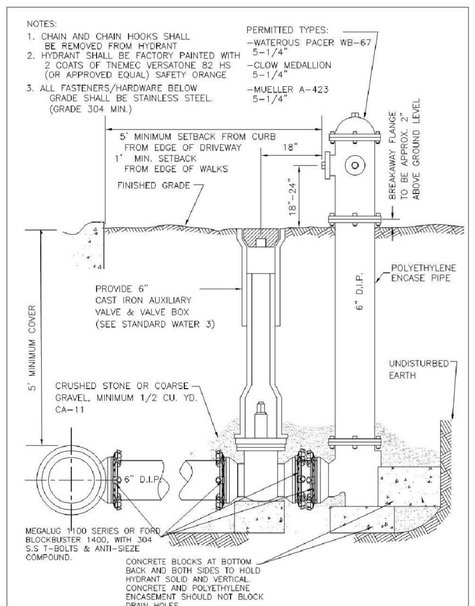

City of Naperville STANDARD DETAIL | HYDRANT | REVISED: 06/15/2015 | SHEET 1 OF 1 | WATER 6 | 490.06

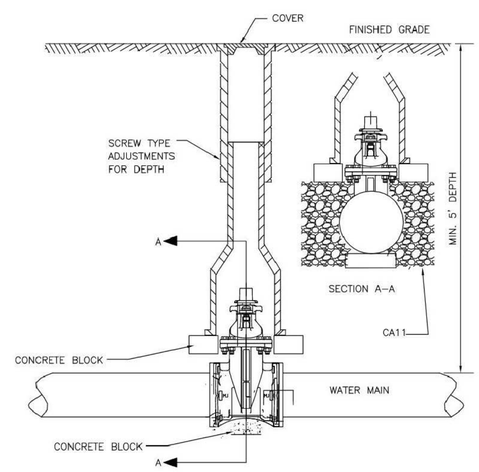

NOTES:

1. TYLER 6850 OR APPROVED EQUAL. FOR LARGER VALVES TYLER 6860 OR APPROVED EQUAL WITH #6 BASE.
2. VALVE BOXES ARE NOT ALLOWED IN PAVED AREAS – VALVE VAULT SHALL BE PROVIDED. CONTRACTOR SHALL SUBMIT IN WRITING ANY LOCATION WHERE A VAULT IS NOT INTENDED TO BE INSTALLED AND SPECIFIC REASON WHY IT CANNOT BE INSTALLED. THIS MUST BE APPROVED IN WRITING BY DPU-WATER.
3. RESTRAINT GLANDS REQUIRED ON EACH SIDE OF VALVE IF STUBBED FOR FUTURE CONNECTION OR PIPE BEND WITHIN TWO PIPE LENGTHS OF VALVE.

City of Naperville STANDARD DETAIL | VALVE BOX | REVISED: 01/01/2013 | SHEET 1 OF 1 | WATER 5 | 490.05

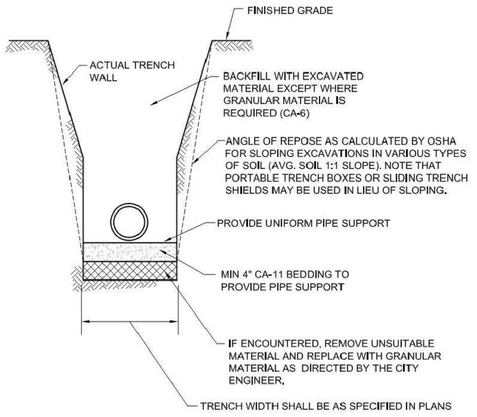

NOTES:

1. IN PAVED AREAS ALL TRENCHES SHALL BE COMPACTED IN ACCORDANCE WITH SECTION 550.07 OF THE IDOT STANDARD SPECIFICATIONS FOR ROAD AND BRIDGE CONSTRUCTION. METHOD 1. 95% MINIMUM STANDARD PROCTOR.
2. DUCTILE IRON WATER MAIN TO BE CLASS 52. ALL DUCTILE IRON PIPE IS TO BE ENCASED IN POLYETHYLENE FILM. POLYETHYLENE ENCASEMENT TO BE INSTALLED IN ACCORDANCE WITH AWWAC105A21.5-99.(OR LATEST EDITION)
3. STAINLESS STEEL NUTS, BOLTS/T-BOLTS, AND WASHERS, TYPE 304 OR BETTER, WILL BE REQUIRED ON ALL WATER MAIN INSTALLATIONS. THIS WOULD APPLY TO HYDRANTS, TAPPING SLEEVES, VALVES, FITTINGS, RESTRAINT, AND OTHER APPURTENANCES BURIED OR IN VALVE VAULTS. MECHANICAL JOINTS AND RESTRAINT GLANDS REQUIRE 304 STAINLESS STEEL T-BOLTS. AN ANTI-SEIZE COMPOUND SHALL BE FACTORY APPLIED TO NUTS OR BOLTS - ANY DAMAGE TO THIS COATING SHALL BE REPAIRED WITH FIELD-APPLIED, APPROVED ANTI-SEIZE COMPOUND THAT IS A MOLYBDENUM-BASE LUBRICANT, BOSTIK NEVER-SEEZ OR APPROVED EQUAL.

City of Naperville STANDARD DETAIL | WATER MAIN TRENCH SECTION | REVISED: 01/01/2013 | SHEET 1 OF 1 | WATER 10 | 490.10

NAPER SETTLEMENT

Wight

Wight & Company
wightco.com
2500 North Frontage Road
Darien, IL 60561
P 630.969.7000
F 630.969.7979

REV	DESCRIPTION	DATE
	ISSUED FOR RESUBMITTAL	10-23-20
	ISSUED FOR PERMIT	09-08-20

NAPER SETTLEMENT INNOVATION GATEWAY & AG CENTER

523 S. WEBSTER STREET
NAPERVILLE, IL 60540

CIVIL DETAILS

Project Number: 200081
Drawn By: SC
Sheet: C5.03

S:\Darien\Naper Settlement\200081_PUD Major Change Process\01\11 Drawings\02 CD\C5.00 CIVIL DETAILS.dwg schen Oct 23, 2020 10:35:54 am
Wight © Copyright All rights reserved. No part of these documents may be reproduced, stored, or transmitted in any form or by any means, electronic, mechanical, photocopying, recording or otherwise, without the prior written consent of Wight.

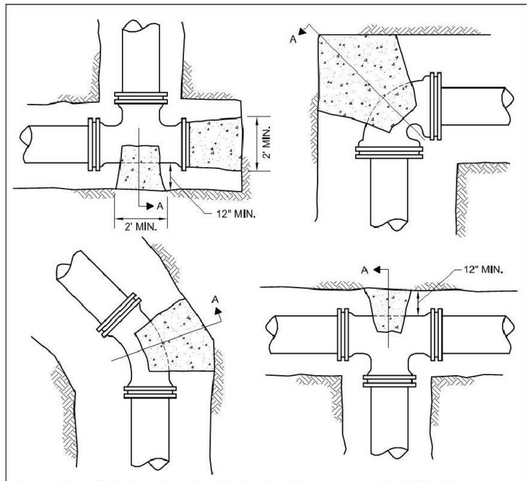

1. THRUST BLOCKING TO PREVENT MOVEMENT OF LINES UNDER PRESSURE AT BENDS, TEES, CAPS, VALVES, HYDRANTS, & AT POINTS SPECIFIED BY THE ENGINEER SHALL BE CLASS "SI".
2. CONCRETE A MINIMUM OF 12" THICK, PLACED BETWEEN SOLID GROUND & THE FITTING, AND SHALL BE ANCHORED IN SUCH A MANNER THAT THE PIPE AND FITTING WILL BE ACCESSIBLE FOR REPAIRS.
3. THRUST BLOCKS SHALL BE PLACED AT BENDS OF 11-1/4° OR MORE.
4. PIPE BENDS TO BE POLYETHYLENE ENCASED.
5. JOINT RESTRAINT AT BEND AND LENGTH OF PIPE EACH DIRECTION FROM BENDS AS REQUIRED BY THE CITY OF NAPERVILLE IF UNDISTURBED SOIL NOT AVAILABLE.
6. THRUST BLOCK FOR PIPES LARGER THAN 12"ø MUST BE POURED IN PLACE

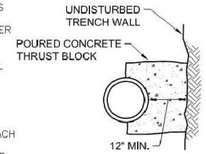

SECTION A

City of Naperville STANDARD DETAIL | THRUST BLOCK | REVISED: 05/15/2015 | SHEET 1 OF 1 | WATER 11 | 490.11

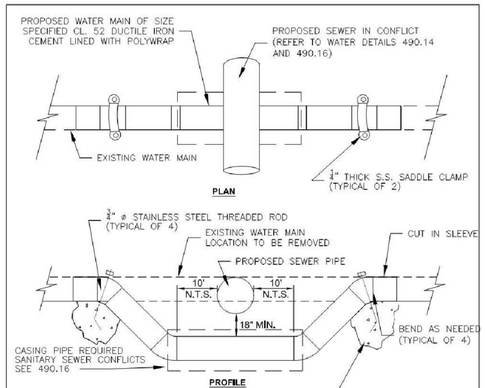

1.) PIPING TO BE DISINFECTED DURING INSTALLATION. ALL NEW JOINTS SHALL BE INSTALLED WITH MEG-A-LUG, OR APPROVED EQUAL, JOINT RESTRAINT. CONTRACTOR SHALL USE 22 1/2 OR 11 1/4 DEGREE BENDS IN LIEU OF 45 DEGREE BENDS WHERE POSSIBLE.

2.) VERTICAL THRUST BLOCKS UNDER BENDS SHALL BE 1 C.Y. MINIMUM OR SIZED AS NEEDED TO RESTRAIN BENDS. CONCRETE TO SUFFICIENTLY CURE PRIOR TO TESTING. POURED CONCRETE SHALL NOT BE PLACED AROUND PIPE BOLTS OR HINDER FUTURE MAINTENANCE.

3.) POLYWRAP SHOULD BE IN SHEETS INSTALLED UNDER WATER MAIN WITH ALL PIPING JOINTS EXPOSED UNTIL AFTER PRESSURE TEST IS COMPLETE, THEN WRAPPED AND TAPED IN PLACE PRIOR TO BACKFILLING.

4.) SEWERS INSTALLED ABOVE WATER MAIN SHALL BE DESIGNED TO PROVIDE WATER MAIN PROTECTION AS REQUIRED BY I.E.P.A

5.) ALL PIPING TO BE FLUSHED AND TWO SAFE CONSECUTIVE BACTERIAL SAMPLES TAKEN PRIOR TO CITY PLACING MAIN BACK IN SERVICE.

City of Naperville STANDARD DETAIL | LOWERING/ADJUSTING WATER MAIN | REVISED: 05/15/2015 | SHEET 1 OF 1 | WATER 13 | 490.13

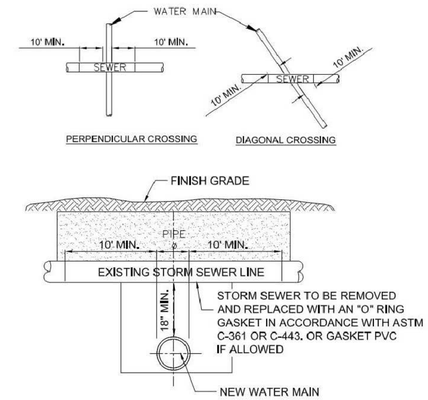

NOTE:
NEW STORM SEWER INSTALLATION SHALL BE GASKETED STRUCTURE TO STRUCTURE

City of Naperville STANDARD DETAIL | WATER MAIN PROTECTION FROM EXISTING STORM SEWER PIPE | REVISED: 01/01/2013 | SHEET 1 OF 1 | WATER 14 | 490.14

CUT A SECTION OF POLYETHYLENE TUBE APPROXIMATELY TWO FEET LONGER THAN THE PIPE SECTION. REMOVE ALL LUMPS OF CLAY, MUD, CINDERS, OR OTHER MATERIAL THAT MIGHT HAVE ACCUMULATED ON THE PIPE SURFACE DURING STORAGE. SLIP THE POLYETHYLENE TUBE AROUND THE PIPE, STARTING AT THE SPIGOT END. BUNCH THE TUBE ACCORDION-FASHION ON THE END OF THE PIPE. PULL BACK THE OVERHANGING END OF THE TUBE UNTIL IT CLEARS THE PIPE END.

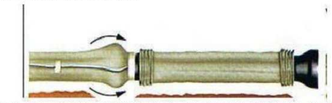

MAKE THE OVERLAP OF THE POLYETHYLENE TUBE BY PULLING BACK THE BUNCHED POLYETHYLENE FROM THE PRECEDING LENGTH OF PIPE AND SECURING IT IN PLACE. NOTE: THE POLYETHYLENE MAY BE SECURED IN PLACE BY USING TAPE, STRING, PLASTIC TIE STRAPS, OR ANY OTHER MATERIAL CAPABLE OF HOLDING THE POLYETHYLENE ENCASEMENT SNUGLY AGAINST THE PIPE.

TAKE UP SLACK IN THE TUBE ALONG THE BARREL OF THE PIPE TO MAKE A SNUG, BUT NOT TIGHT, FIT. FOLD EXCESS POLYETHYLENE BACK OVER THE TOP OF THE PIPE.

REPAIR ALL SMALL RIPS, TEARS OR OTHER TUBE DAMAGE WITH MANUFACTURER APPROVED ADHESIVE TAPE.

1. COVER BENDS, REDUCERS AND OTHER PIPE-SHAPED APPURTENANCES WITH POLYETHYLENE IN THE SAME MANNER AS THE PIPE.

2. WRAP VALVES, TEES AND OTHER ODD-SHAPED APPURTENANCES WITH A FLAT SHEET OR SPLIT LENGTH OF POLYETHYLENE TUBE BY PASSING THE SHEET UNDER THE APPURTENANCES AND BRINGING IT UP AROUND THE BODY. MAKE SEAMS BY BRINGING THE EDGES OF THE POLYETHYLENE SHEET TOGETHER, FOLDING OVER TWICE, AND TAPING DOWN.

3. POLYETHYLENE ENCASEMENT TO BE IN ACCORDANCE WITH A.W.W.A. C105-990R LATEST VERSION.

4. COPPER SERVICE TAPS ARE TO BE WRAPPED WITH POLYETHELENE OR A SUITABLE DIELECTRIC APE FOR A MINIMUM CLEAR DISTANCE OF 3' AWAY FROM THE MAIN.

City of Naperville STANDARD DETAIL | POLYETHYLENE ENCASEMENT | REVISED: 01/01/2013 | SHEET 1 OF 1 | WATER 15 | 490.15

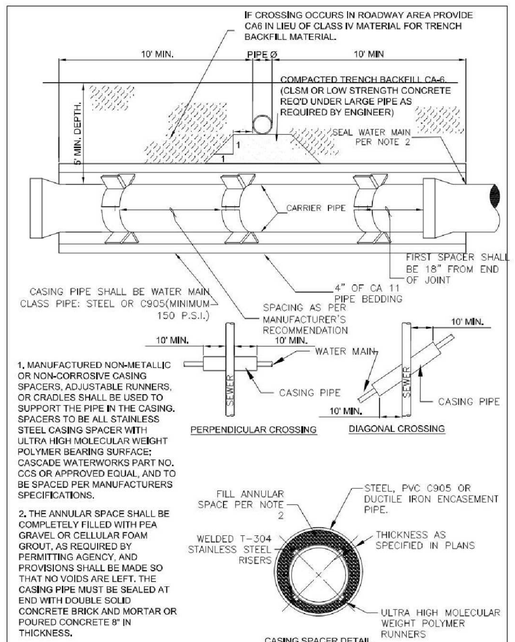

1. MANUFACTURED NON-METALLIC OR NON-CORROSIVE CASING SPACERS, ADJUSTABLE RUNNERS, OR CRADLES SHALL BE USED TO SUPPORT THE PIPE IN THE CASING. SPACERS TO BE ALL STAINLESS STEEL CASING SPACER WITH ULTRA HIGH MOLECULAR WEIGHT POLYMER BEARING SURFACE: CASCADE WATERWORKS PART NO. CCS OR APPROVED EQUAL, AND TO BE SPACED PER MANUFACTURERS SPECIFICATIONS.

2. THE ANNULAR SPACE SHALL BE COMPLETELY FILLED WITH PEA GRAVEL OR CELLULAR FOAM GROUT, AS REQUIRED BY PERMITTING AGENCY, AND PROVISIONS SHALL BE MADE SO THAT NO VOIDS ARE LEFT. THE CASING PIPE MUST BE SEALED AT END WITH DOUBLE SOLID CONCRETE BRICK AND MORTAR OR POURED CONCRETE 8" IN THICKNESS.

City of Naperville STANDARD DETAIL | WATER MAIN CASING PIPE | REVISED: 01/01/2013 | SHEET 1 OF 1 | WATER 16 | 490.16

NAPER SETTLEMENT

Wight

Wight & Company
wightco.com
2500 North Frontage Road
Darien, IL 60561
P 630.969.7000
F 630.969.7979

REV	DESCRIPTION	DATE
	ISSUED FOR RESUBMITTAL	10-23-20
	ISSUED FOR PERMIT	09-08-20

NAPER SETTLEMENT INNOVATION GATEWAY & AG CENTER

523 S. WEBSTER STREET
NAPERVILLE, IL 60540

CIVIL DETAILS

Project Number:
200081
Drawn By:
SC
Sheet:
C5.04

S:\Darien\Naper Settlement\200081_PUD Major Change Process\01\11 Drawings\02 CD\C5.00 CIVIL DETAILS.dwg schen Oct 23, 2020 10:35:58 am
Wight © Copyright All rights reserved. No part of these documents may be reproduced, stored, or transmitted in any form or by any means, electronic, mechanical, photocopying, recording or otherwise, without the prior written consent of Wight.

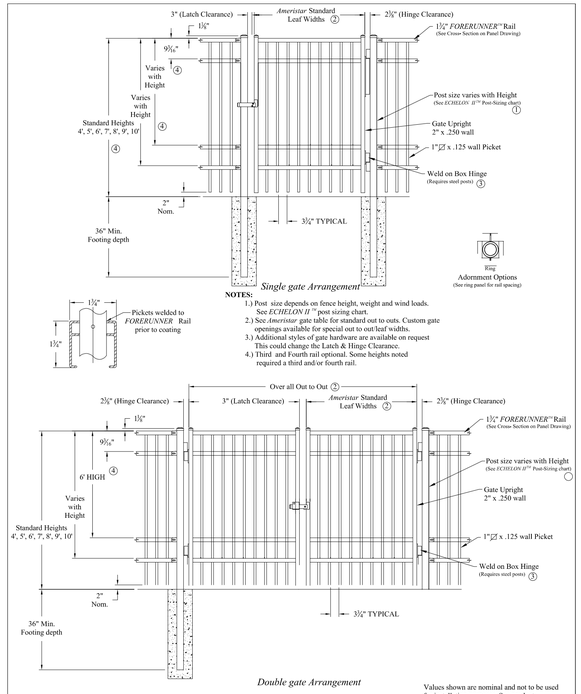

NOTES:
1.) Post size depends on fence height, weight and wind loads. See *ECHELON II ™* post sizing chart.
2.) See *Ameristar* gate table for standard out to outs. Custom gate openings available for special out to out/leaf widths.
3.) Additional styles of gate hardware are available on request This could change the Latch & Hinge Clearance.
4.) Third and Fourth rail optional. Some heights noted required a third and/or fourth rail.

Values shown are nominal and not to be used for installation purposes. See product specification for installation requirements.

2AMISOG

INDUSTRIAL STRENGTH ALUMINUM

ECHELON II MAJESTIC 2/3/4-RAIL SGL & DBL GATE			
DR: NJB	SH . 1of 1	SCALE: DO NOT SCALE	
CK: BS	Date 2-07-12		REV: d

AMERISTAR®
1555 N. Mingo
Tulsa, OK 74116
1-888-333-3422
www.ameristarfence.com

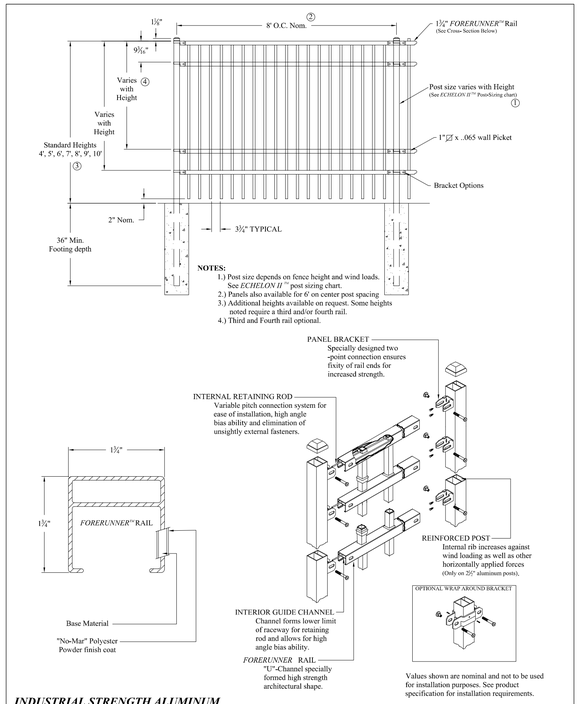

NOTES:
1.) Post size depends on fence height and wind loads. See *ECHELON II ™* post sizing chart.
2.) Panels also available for 6' on center post spacing
3.) Additional heights available on request. Some heights noted require a third and/or fourth rail.
4.) Third and Fourth rail optional.

Values shown are nominal and not to be used for installation purposes. See product specification for installation requirements.

2AMISO

INDUSTRIAL STRENGTH ALUMINUM

ECHELON II MAJESTIC 2/3/4-RAIL			
DR: NJB	SH . 1of 1	SCALE: DO NOT SCALE	
CK: BS	Date 2-07-12		REV: e

AMERISTAR®
1555 N. Mingo
Tulsa, OK 74116
1-888-333-3422
www.ameristarfence.com

1 6' HEIGHT WOOD FENCE
SCALE: NTS

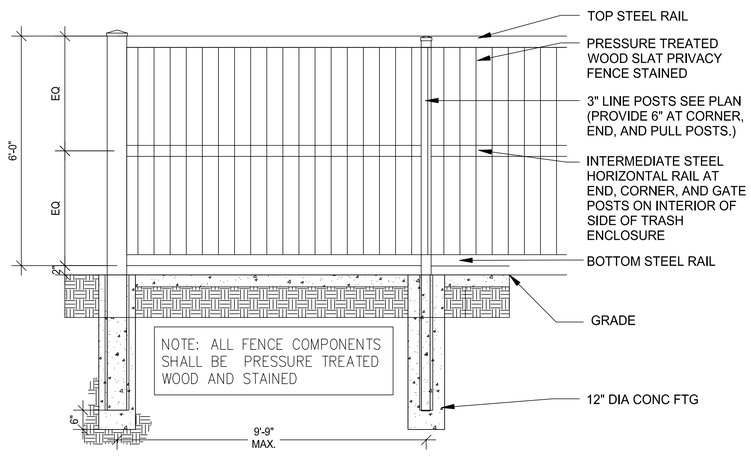

WOOD FENCE DETAIL

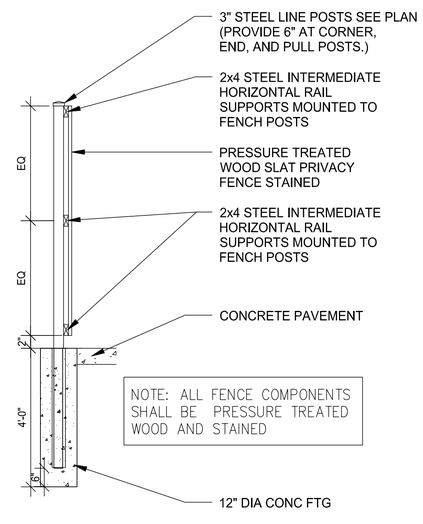

POST DETAIL

CONTRACTOR TO SUBMIT STAIN COLORS FOR APPROVAL. STAIN SHOULD BE CONSISTENT WITH THE BUILDING

DATA SHEET

Bulldog-Edg™

FLEXIBLE 1.75 INCH HIGH PAVER EDGING

OLY-OLA EDGINGS, INC. ESTABLISHED 1976
The Edging Experts

1-800-EDGINGS (334-4647)
edgings@olyola.com
www.olyola.com

PAVER RESTRAINT

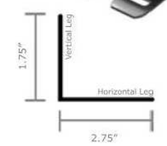

The strongest paver restraint in Oly-Ola's line, Bulldog-Edg™ features a thicker PVC construction that makes it ideal for extra heavy-duty hardscape construction projects such as driveways and patios. Bulldog's one-piece design flexes without snipping or cutting to make tight curves. Its simple, yet effective, design makes it the perfect choice for serious hardscaping professionals.

And, as with all Oly-Ola paver restraints, Bulldog-Edg™ is made with 100% recycled, high grade PVC without fillers or blown in material. It can be installed under or outside the paver.

Available in flexible style, 7.5 or 15 ft. lengths

	SPECIFICATIONS
Material:	Black rigid polyvinyl chloride (PVC), carbon black concentrate and impact modifier
Packaging:	15 foot - 6 pieces per bundle (90 ft.) 7.5 foot - 12 pieces per bundle/box (90 ft.)
Average Wall Thickness:	Vertical Leg = .175 - .185 inches Horizontal Leg = .145 - .155 inches
Dimensions Per Piece:	Depth = 1.75 inch vertical leg Width = 2.75 inch horizontal leg
Can be Formed with Heat:	Yes - heat gun or propane torch *(Light Contact)*
Approx. Weight:	15 ft. piece: 5.6 lbs. bundle: 34 lbs. 7.5 ft. piece: 2.8 lbs. bundle: 34 lbs. 7.5 ft. box: 39 lbs. *(Includes 36 Stakes & 12 H-clips)*
Connection Type:	H-Clip - Use PVC glue for permanent hold
Staking:	Vertically through provided holes using nail or Oly-Ola's 9.25 inch stake *(Sold Separately)*
Available Styles:	Flexible only

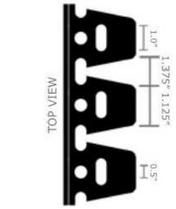

With Bulldog-Edg's L-shaped design, you have install options.

Installation Guidelines & Tips

BASICS

Install the bricks or pavers according to the manufacturer's guidelines. If installing underneath the pavers, measure the final row of pavers before securing the paver restraint. When installing outside the pavers, simply butt the restraint up against the pavers. Once in place, secure the restraint with steel stakes.

STAKING

Secure the restraint by staking it every 2 feet at minimum through the holes provided on the horizontal leg. When installing the restraint outside of the pavers, pound the stake at a 45 degree angle toward the pavers. When installing the restraint underneath the pavers, stake at a 90 degree angle until the top of stake is flush with the horizontal leg. Use extra stakes when securing joints and curves. Do not make the mistake of using too few stakes, especially when the ground is exposed to cold temperatures.

Since our paver restraints are made of true PVC, they can be heated with a propane torch or heat gun and then bent to form 90 degree corners and other angles. Be sure to practice your technique on scrap pieces before applying it in the field.

CONNECTOR: H-CLIP

This H-clip can be used with each of Oly-Ola's paver restraints. Use PVC cement at the joint for a permanent hold.

Discover THE OLY-OLA EDGE

Oly-Ola Edgings, Inc. | 124 E St. Charles Road - Villa Park, IL - 60181 | Phone: 1-800-EDGINGS Fax: 630 833-0816 Email: edgings@olyola.com

NAPER SETTLEMENT

Wight

Wight & Company
wightco.com
2500 North Frontage Road
Darien, IL 60561
P 630.969.7000
F 630.969.7979

REV	DESCRIPTION	DATE
	ISSUED FOR RESUBMITTAL	10-23-20
	ISSUED FOR PERMIT	09-08-20

NAPER SETTLEMENT
INNOVATION
GATEWAY
& AG CENTER

523 S. WEBSTER STREET
NAPERVILLE, IL 60540

CIVIL DETAILS

Project Number:
200081
Drawn By:
SC
Sheet:
C5.05

S:\Darien\Naper_Settlement\200081_PUD Major Change Process\01\11 Drawings\02 CD\C5.00 CIVIL DETAILS.dwg schen Oct 23, 2020 10:36:03 am
Wight & Company All rights reserved. No part of these documents may be reproduced, stored, or transmitted in any form or by any means, electronic, mechanical, photocopying, recording or otherwise, without the prior written consent of Wight.