EXHIBIT A

CITY OF NAPERVILLE
NAPERVILLE, ILLINOIS

GREEN ACRES WATER MAIN IMPROVEMENTS

BID # 17-190

SEPTEMBER, 2017

GREEN ACRES
NAPERVILLE TWP. –
TOWNSHIP: 38 NORTH
RANGE: 9E
OF 3RD PRINCIPLE MERIDIAN

INDEX TO SHEETS

SHEET DESCRIPTION	SHEET NO.
COVER SHEET	1
GENERAL NOTES/QUANTITY SHEET	2
SITE PLAN	3
PLAN AND PROFILE	4–6
STANDARD DETAILS	7–8

GPS-MONUMENTS

GPS# 219
HORIZONTAL DATUM
NAD83 (2007) ILLINOIS STATE PLANE TRANSVERSE MERCATOR, EAST ZONE

VERTICAL DATUM
NAVD 1988 ADJUSTMENT

ELEVATION = 707.72
N: 1,857,859.63
E: 1,029,787.96

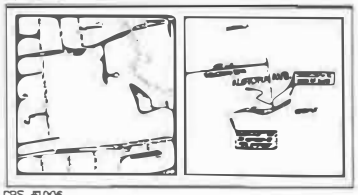

GPS #1006
HORIZONTAL DATUM
NAD83 (2007) ILLINOIS STATE PLANE TRANSVERSE MERCATOR, EAST ZONE

VERTICAL DATUM
NAVD 1988 ADJUSTMENT

ELEVATION = 694.27
N: 1,853,532.91
E: 1,034,522.94

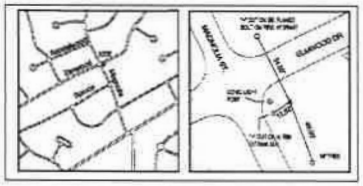

LOCAL BENCH MARK
SANITARY MANHOLE IN FRONT OF LIFT STATION

PROJECT LOCATION

LOCATION MAP

N

PROJECT SITE

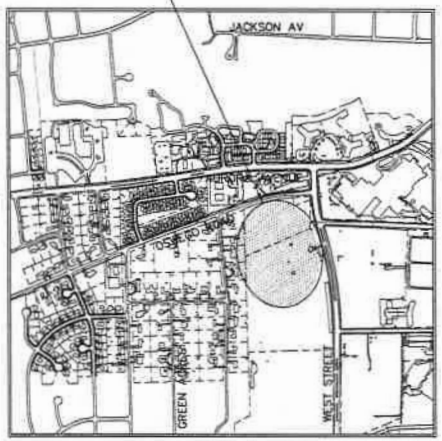

SITE PLAN

STATE OF ILLINOIS)
SS)
COUNTY OF DUPAGE)

I, ADAM JASINSKI, AN ILLINOIS LICENSED PROFESSIONAL ENGINEER, HEREBY CERTIFY THAT THESE PLANS HAVE BEEN PREPARED UNDER MY PERSONAL DIRECTION FOR THE EXCLUSIVE USE OF THE CITY OF NAPERVILLE, DEPARTMENT OF PUBLIC UTILITIES. REPRODUCTION OR USE BY THIRD PARTIES IS STRICTLY PROHIBITED WITHOUT THE WRITTEN PERMISSION OF THE UNDERSIGNED.

GIVEN UNDER MY HAND AND SEAL THIS 6TH DAY OF SEPTEMBER, 2017

Adam Jasinski

ILLINOIS LICENSED PROFESSIONAL ENGINEER NO. 062-065185
LICENSE VALID THROUGH NOVEMBER 30, 2017

ADAM JASINSKI
062-065185
STATE OF ILLINOIS
Exp. 11/30/17

CALL JULIE
BEFORE EXCAVATING
1-800-892-0123 OR 811

CITY OF NAPERVILLE DEPARTMENT OF PUBLIC UTILITIES
CIVIL ENVIRONMENTAL ENGINEERING AND CONSTRUCTION MANAGEMENT DIVISION

GREEN ACRES WATER MAIN IMPROVEMENTS
COVER SHEET

REVISIONS

NUMBER	BY	DATE

DESIGN BY:	A. JASINSKI
DRAWN BY:	G. VILLALOBOS
CHECKED BY:	A. JASINSKI
APPROVED BY:	A. RIES
DATE:	09-05-2017
JOB No:	17-190

SHEET 1 OF 8 SHEETS

GENERAL NOTES:

1. ALL WORK TO BE CONSTRUCTED IN ACCORDANCE WITH "STANDARD SPECIFICATIONS FOR WATER & SEWER MAIN CONSTRUCTION IN ILLINOIS", LATEST EDITION.

2. NEW WATER MAIN VALVES, INCLUDING PRESSURE TAP VALVES, ADJACENT TO AN EXISTING WATER MAIN, AND EXISTING WATER MAIN VALVES SHALL ONLY BE OPERATED BY THE CITY OF NAPERVILLE, DEPARTMENT OF PUBLIC UTILITIES CEEAOM DIVISION PERSONNEL WITH 48-HOUR NOTICE (MONDAY-FRIDAY). CONTACT NAPERVILLE TED BUSINESS GROUP AT 630-420-6082 FOR SCHEDULING.

3. CONTRACTOR SHALL SUBMIT A SEQUENCE OF CONSTRUCTION AND A DETAILED PROGRESS SCHEDULE TO THE CITY PRIOR TO COMMENCING WORK.

4. ADEQUATE BARRICADES, CONSTRUCTION SIGNS, LIGHTS AND GUARDS SHALL BE PLACED AND MAINTAINED BY THE CONTRACTOR AT HIS EXPENSE DURING THE PROGRESS OF THE CONSTRUCTION WORK AND UNTIL IT IS SAFE FOR PUBLIC TO USE THE ROADS. ALL MATERIAL PILES, EQUIPMENT AND PIPE WHICH MAY ACT AS OBSTRUCTIONS/HAZARDS TO TRAFFIC/PUBLIC SHALL BE ENCLOSED BY FENCES OR LIGHTED BARRICADES AND SHALL BE PROTECTED BY PROPER LIGHTS WHEN THE VISIBILITY IS POOR. BARRICADES SHALL CONFORM TO IDOT STANDARD 702001,TYPE III.

5. CONTRACTOR SHALL RESTRICT HIS OPERATIONS TO PROPERTY, EASEMENTS AND RIGHT-OF-WAY AS SHOWN ON THE DRAWINGS.

6. PRIOR TO THE START OF CONSTRUCTION, THE CONTRACTOR SHALL LAY OUT THE PROPOSED IMPROVEMENTS AND SHALL VERIFY ALL DIMENSIONS, ANGLES AND STATIONS SHOWN. SHOULD THE CONTRACTOR NOTE ANY DISCREPANCIES OR CONFLICTS, HE SHALL NOTIFY THE ENGINEER PRIOR TO PROCEEDING WITH THE PROJECT WORK.

7. PRIOR TO THE START OF CONSTRUCTION, THE CONTRACTOR SHALL ARRANGE TO HAVE ALL UNDERGROUND UTILITIES INCLUDING WATER, GAS, ELECTRIC, STORM SEWER, SANITARY SEWER, TELEPHONE AND CABLE TV LOCATED AND SUITABLY MARKED. SHOULD A UTILITY BE IN CONFLICT WITH THE PROPOSED CONSTRUCTION, THE ENGINEER SHALL BE NOTIFIED AT ONCE. IF UTILITIES INTERFERE WITH THE CONSTRUCTION ALIGNMENT, THEY SHALL BE PROTECTED AT NO ADDITIONAL EXPENSE TO THE OWNER AND WITHOUT CLAIM BY THE CONTRACTOR FOR DELAYS DUE TO UTILITY LINES ENCOUNTERED. THE CITY OF NAPERVILLE SHALL BE NOTIFIED 48 HRS IN ADVANCE OF WATER MAIN, SANITARY, AND ELECTRIC CROSSINGS

8. INFORMATION ON THE PLANS REGARDING UNDERGROUND UTILITIES IS TAKEN FROM THE BEST AVAILABLE RECORDS, BUT IS NOT REPRESENTED AS BEING ENTIRELY CORRECT OR COMPLETE. THE CONTRACTOR SHALL NOTIFY OPERATING AGENCY IN ADVANCE OF CROSSING OVER OR UNDER ANY UTILITIES SHOWN ON THE PLANS. THE CONTRACTOR SHALL NOTIFY OPERATING AGENCY AND ENGINEER IMMEDIATELY UPON DISCOVERY OF ANY UTILITY NOT SHOWN ON THE PLANS. ANY UTILITIES DAMAGED BY THE CONTRACTOR'S OPERATIONS SHALL BE REPAIRED AT THE CONTRACTOR'S EXPENSE.

9. ALL DISTURBED AREAS SHALL BE CLEANED UP AND RESTORED TO A SIMILAR CONDITION. CLEAN UP SHOULD FOLLOW CLOSELY BEHIND CONSTRUCTION OPERATIONS. PAVEMENT SHALL BE MAINTAINED IN A CLEAN AND SHALL BE SWEPT DAILY, DURING SWEEPING OPERATIONS, PAVEMENT SHALL BE SPRAYED WITH WATER TO MINIMIZE THE SPREAD OF DUST.

10. THE CONTRACTOR SHALL PROTECT ALL PROPERTY PINS AND SURVEY MONUMENTS AND SHALL RESTORE ANY WHICH ARE DISTURBED BY HIS OPERATIONS AT NO ADDITIONAL COST TO THE CONTRACT.

11. ALL EXISTING TRAFFIC SIGNS, FENCES, GUARDRAILS, STREET SIGNS, ETC. WHICH INTERFERE WITH CONSTRUCTION OPERATIONS AND NOT NOTED FOR REMOVAL OR DISPOSAL SHALL BE MAINTAINED BY THE CONTRACTOR OR TEMPORARILY RELOCATED. THIS IS CONSIDERED INCIDENTAL TO THE CONTRACT AND NO ADDITIONAL COMPENSATION SHALL BE ALLOWED. DAMAGE TO THESE ITEMS SHALL BE REPAIRED BY THE CONTRACTOR AT HIS OWN EXPENSE.

12. ALL EXISTING FACILITIES SHALL BE KEPT IN SERVICE DURING CONSTRUCTION EXCEPT WHERE PERMISSION IS GRANTED OTHERWISE BY THE OWNER. ALL VALVE BOXES AND VALVE VAULTS SHALL NOT BE COVERED WITH CONSTRUCTION DEBRIS AND SHALL REMAIN ACCESSIBLE TO THE RESPECTIVE UTILITY COMPANY.

13. THE CONTRACTOR HAS SOLE AND COMPLETE RESPONSIBILITY FOR THE JOB SITE CONDITIONS DURING THE COURSE OF CONSTRUCTION OF THIS PROJECT, INCLUDING SAFETY OF ALL PERSONS AND PROPERTY; THIS REQUIREMENT SHALL APPLY CONTINUOUSLY AND IS NOT LIMITED TO NORMAL WORKING HOURS. THE CONTRACTOR SHALL DEFEND, INDEMNIFY AND HOLD THE OWNER AND ENGINEER HARMLESS FROM ANY AND ALL LIABILITY, REAL OR ALLEGED, IN CONNECTION WITH THE PERFORMANCE OF WORK ON THIS PROJECT.

14. ANY EXISTING UTILITY STRUCTURES REQUIRING ADJUSTMENT OR RECONSTRUCTION SHALL BE COMPLETED BY THE CONTRACTOR TO THE SATISFACTION OF THE UTILITY OWNER. ADJUSTMENTS AND/OR RECONSTRUCTIONS NOT CALLED FOR ON THE PLANS SHALL BE CONSIDERED INCIDENTAL TO THE CONTRACT. NO MORE THAN A TOTAL OF 12 INCHES OF ADJUSTING RINGS AND/OR 2 ADJUSTING RINGS SHALL BE ALLOWED. ALL STRUCTURE FRAMES SHALL BE FLUSH WITH FINAL GRADE.

15. NAPERVILLE DEPARTMENT OF PUBLIC UTILITIES - ELECTRIC HAS FACILITIES LOCATED IN THE AREA OF CONSTRUCTION. JULIE LOCATE, PROTECT AND HAND DIG AS REQUIRED TO PROTECT EXISTING NDPU-E FACILITIES.

16. CONTRACTOR TO PROTECT EXISTING PAVEMENT AND CURB FROM DAMAGE CAUSED BY EQUIPMENT TRACKS, TRUCKS ETC., USING STEEL PLATES OR OTHER MEANS AS APPROVED BY THE ENGINEER.

17. A SET OF AS-BUILT RECORD DRAWING SHALL BE GIVEN TO THE CITY OF NAPERVILLE UPON COMPLETION OF IMPROVEMENTS SHOWING THE ELEVATION AND LOCATION (TIED TO TWO POINTS) OF ALL NEW AND EXISTING STRUCTURES INCLUDING FIRE HYDRANTS, VALVE BOXES AND VAULTS, LINESTOP SLEEVES, WATER SERVICE CORPORATION STOPS, WATER MAIN FITTINGS/BENDS, MANHOLES, SANITARY SERVICE WYES (MEASURED FROM DOWNSTREAM MANHOLE), AND ABANDONED WATER OR SANITARY SERVICE LINES. ALL ELEVATIONS SHOULD BE REFERENCED TO THE SAME BENCHMARK DATUM AS THE ORIGINAL DESIGN PLANS. HORIZONTAL TIES SHALL BE REFERENCED TO LOT LINES, BACK OF CURB, OR PROPERTY CORNERS.

WATER MAIN NOTES

12. DUCTILE IRON WATER MAIN TO BE CLASS 52. ALL DUCTILE IRON PIPE IS TO BE ENCASED IN POLYETHYLENE FILM POLYETHYLENE ENCASEMENT AND INSTALLED IN ACCORDANCE WITH NEW STANDARD IS ANSI/AWWA C105/A21.0-10.

13. WATER SERVICE LINE SMALLER THAN 3" SHALL BE TYPE K COPPER. IF JOINTS ARE REQUIRED DUE TO LENGTH OF SERVICE, THEN ONLY COMPRESSION TYPE COUPLING SHALL BE PERMITTED. NO SOLDERED OR FLARED TYPE JOINTS ARE ALLOWED.

14. ALL BRASS COMPONENTS SHALL BE CERTIFIED TO BE LEAD FREE IN COMPLIANCE WITH NSF 61 AND NSF 372 AND IDENTIFIED WITH APPLICABLE MARKINGS.

15. ALL 12" WATER MAIN PIPE BENDS SHALL BE RESTRAINED WITH BOTH JOINT RESTRAINTS AND POURED IN PLACE CONCRETE THRUST BLOCKING (AS SHOWN ON STANDARD DETAIL 430.11). JOINT RESTRAINT SHALL PROVIDE A MINIMUM OF 55 L.F. OF CONTINUOUS/RESTRAINED PIPE FOR 90-DEGREE BENDS AND 30 L.F FOR 45-DEGREE BENDS. COST OF THIS RESTRAINT IS INCIDENTAL TO WATER MAIN BEING INSTALLED.

16. ALL RETAINER GLANDS WHEN REQUIRED TO RESTRAIN VALVES, FITTINGS, HYDRANTS, AND PIPE JOINTS SHALL BE MECHANICAL JOINT WEDGE ACTION TYPE MEGALUG 1100 SERIES AS MANUFACTURED BY EBBA IRON, INC. OR UNI-FLANGE BLOCKBUSTER 1400 SERIES AS MANUFACTURED BY FORD METER BOX CO. AND SHALL BE FOR USE ON DUCTILE IRON PIPE CONFORMING TO ANSI/AWWA C151/A21.51, FOR NOMINAL PIPE SIZES 3" THROUGH 48".

17. EXISTING DUCTILE IRON SYSTEMS FOR RESTRAINING PUSH-ON PIPE BELLS SHALL BE MEGALUG SERIES 1100HD OR FORD SERIES 1390.

18. EXISTING DUCTILE IRON SYSTEMS REQUIRING RESTRAINT SHALL BE MEGALUG SERIES 1100SD (SPLIT MEGALUG) FOR MECHANICAL JOINTS.

19. THE VALVES LESS THAN 16" SHALL BE STANDARD PATTERN. GATE VALVES AND SHALL HAVE THE NAME OR MARK OF THE MANUFACTURER, SIZE AND WORKING PRESSURE PLAINLY CAST IN RAISED LETTERS ON THE VALVE BODY. VALVES MAY BE APPROVED FROM ONE OF THE FOLLOWING MANUFACTURERS: AMERICAN, CLOW, WATEROUS OR KENNEDY.

20. STAINLESS STEEL NUTS, BOLTS/T-BOLTS, AND WASHERS, TYPE 304 OR BETTER, WILL BE REQUIRED ON ALL WATER MAIN INSTALLATIONS. THIS WOULD APPLY TO HYDRANTS, TAPPING SLEEVES, VALVES, FITTINGS, RESTRAINT, AND OTHER APPURTENANCES BURIED OR IN VALVE VAULTS. MECHANICAL JOINTS AND RESTRAINT GLANDS REQUIRE 304 STAINLESS STEEL T-BOLTS. AN ANTI-SEIZE COMPOUND SHALL BE FACTORY APPLIED TO NUTS OR BOLTS - ANY DAMAGE TO THIS COATING SHALL BE REPAIR WITH FIELD APPLIED APPROVED ANTI-SEIZE COMPOUND THAT IS A MOLYBDENUM-BASE LUBRICANT. BOSTIK NEVER-SEEZ OR APPROVED EQUAL.

21. WATER MAINS SHALL BE SUBJECTED TO A HYDROSTATIC/LEAKAGE TEST IN ACCORDANCE WITH NAPERVILLE STANDARD SPECIFICATIONS. TEST PRESSURE SHALL BE NO LESS THAN 150 PSI FOR A PERIOD OF 4 HOURS AND NOT VARY BY MORE THAN ± 5 PSI, DURING THE TEST. THE TEST GAUGE SHALL BE APPROVED BY THE CITY AND SHALL BE GLYCERIN OR OIL FILLED, WITH A RANGE OF NOT MORE THAN 200 PSI AND INCREMENTS NOT GREATER THAN 5 PSI, 4 " MINIMUM DIAL SIZE. WATER RECOVERY TEST SHALL BE COMPLETED AT THE END OF THE TESTING PERIOD TO SHOW ACTUAL LEAKING AND THAT THE WATER MAIN DID NOT HAVE TOO MUCH TRAPPED AIR IN THE TESTED SECTION.

22. FIRE HYDRANT SHOULD BE BAGGED "NOT IN SERVICE" UNTIL ALL TESTING AND DISINFECTION HAS BEEN COMPLETED AND NEW WATER MAIN SECTION IS SERVICE.

CITY OF NAPERVILLE DEPARTMENT OF PUBLIC UTILITIES
CIVIL ENVIRONMENTAL ENGINEERING AND CONSTRUCTION MANAGEMENT DIVISION

GREEN ACRES WATER MAIN IMPROVEMENTS
GENERAL NOTES

REVISIONS

NUMBER	BY	DATE

DESIGN BY:	A.JASINSKI
DRAWN BY:	G.VILLALOBOS
CHECKED BY:	A.JASINSKI
APPROVED BY:	A. RIES
DATE:	
JOB No:	BID 16-190

SHEET 2 OF 8 SHEETS

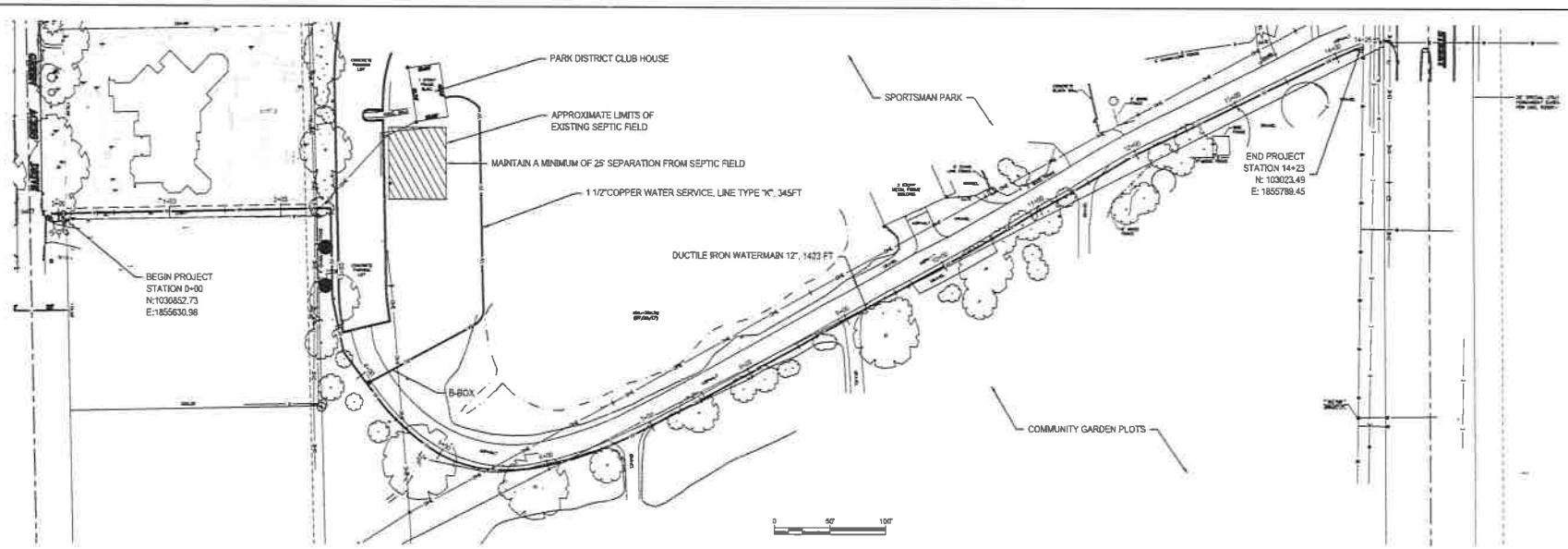

LEGEND

EXISTING	DESCRIPTION
	MANHOLE
	CATCH BASIN
	INLET
	VALVE & VAULT
	VALVE & BOX
	FIRE HYDRANT
	CLEANOUT
	BUFFALO BOX
	IRRIGATION VALVE
	STREET LIGHT
	LIGHT STANDARD
	POWER POLE
	GAS VALVE
	GAS METER
	TELEPHONE MANHOLE
	TELEPHONE PEDESTAL
	ELECTRIC MANHOLE
	ELECTRIC PEDESTAL
	ELECTRIC METER
	BOLLARD LIGHT
	AIR CONDITIONER
	ELECTRIC HAND HOLE
	CABLE TELEVISION PEDESTAL
	ROADWAY/HANDICAP SIGN
	STORM SEWER
	SANITARY SEWER
	WATERMAIN
	FORCEMAIN
	HEADWALL
	END SECTION
	CORRUGATED METAL PIPE
	ELECTRIC LINE
	STREET LIGHT CABLING
	GAS LINE
	AT&T TELEPHONE LINE
	TELEPHONE LINE
	FIBER OPTIC CABLE
	NETWORK FIBER OPTIC CABLE
	OVERHEAD POWER LINES
	CABLE TELEVISION
	CONTOURS
	FENCE LINE
	GUARDRAIL
+000.0	ELEVATIONS
	SIDEWALK
	CURB
	DEPRESSED CURB

ABBREVIATIONS	
REC.	RECORD DATA
MEAS.	MEASURED DATA
DEED	DEEDED DATA
R.	RADIUS
A.	ARC DATA
ROW	RIGHT OF WAY
PL	PROPERTY LINE
CL	CENTERLINE
PU & DE	PUBLIC UTILITY & DRAINAGE EASEMENT
TC	TOP OF CURB
FL	FLOWLINE
EP	EDGE OF PAVEMENT
P	PAVEMENT
EG	EDGE OF GRAVEL
EC	EDGE OF CONCRETE
EB	EDGE OF PAVER BRICK
SW	SIDEWALK
BW	BACK OF WALK
G	GROUND
TEL	TELEPHONE
E	ELECTRIC
CATV	CABLE TELEVISION
INV	INVERT
TWALL	TOP OF WALL
BWALL	BOTTOM OF WALL
TF	TOP OF FOUNDATION
LO	LOOK OUT
WO	WALK OUT
GF	GARAGE FLOOR
HWL	HIGH WATER LEVEL
NWL	NORMAL WATER LEVEL
LNA	LIMITS OF NATURAL AREA

LINE TYPES	
	BOUNDARY
	EXISTING LOT LINE
	EXISTING EASEMENT LINE
	EXISTING BUILDING LINE
	SECTION LINE
	CENTER LINE

	DECIDUOUS TREE
	CONIFEROUS TREE
	BUSH/BUSH LINE
	STRUCTURE CALLOUT

CITY OF NAPERVILLE DEPARTMENT OF PUBLIC UTILITIES
CIVIL ENVIRONMENTAL ENGINEERING AND CONSTRUCTION MANAGEMENT DIVISION

GREEN ACRES WATER MAIN IMPROVEMENTS
SITE PLAN

REVISIONS

NUMBER	BY	DATE

DESIGN BY:	A. JASINSKI
DRAWN BY:	C. VILLALOBOS
CHECKED BY:	A. JASINSKI
APPROVED BY:	A. RIES
DATE:	09-05-2017
JOB No:	BID 17-190

SHEET 3 OF 8 SHEETS

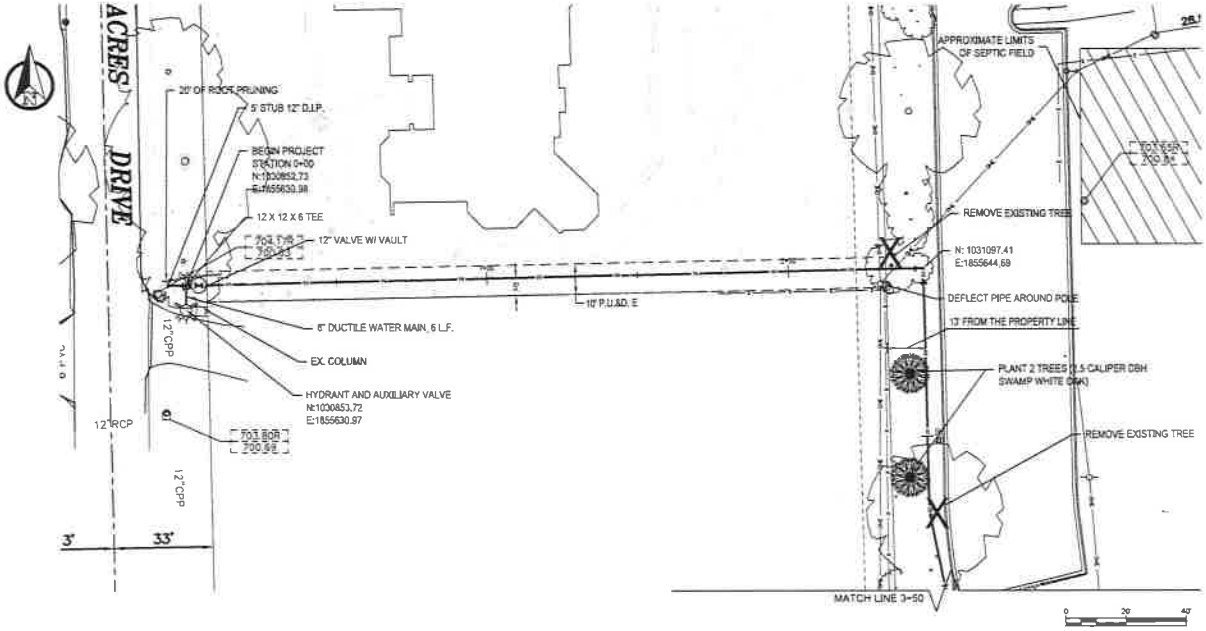

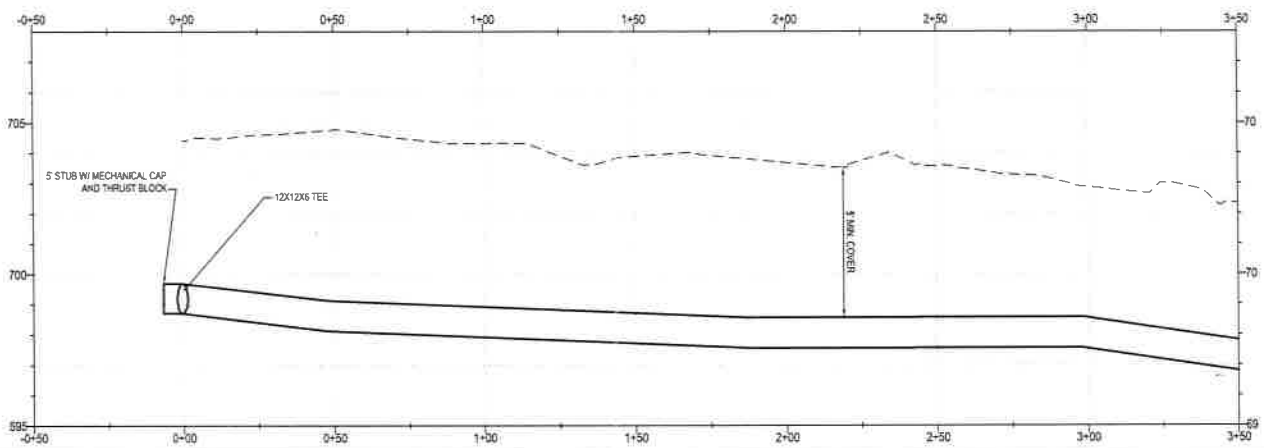

CITY OF NAPERVILLE DEPARTMENT OF PUBLIC UTILITIES
CIVIL ENVIRONMENTAL ENGINEERING AND CONSTRUCTION MANAGEMENT DIVISION

GREEN ACRES WATER MAIN IMPROVEMENTS
PLAN AND PROFILE

REVISIONS

NUMBER	BY	DATE

DESIGN BY:	A. JASINSKI
DRAWN BY:	G. VILLALOBOS
CHECKED BY:	A. JASINSKI
APPROVED BY:	A. RIES
DATE:	09-05-2017
JOB No:	SID 17-190

SHEET 4 OF 8 SHEETS

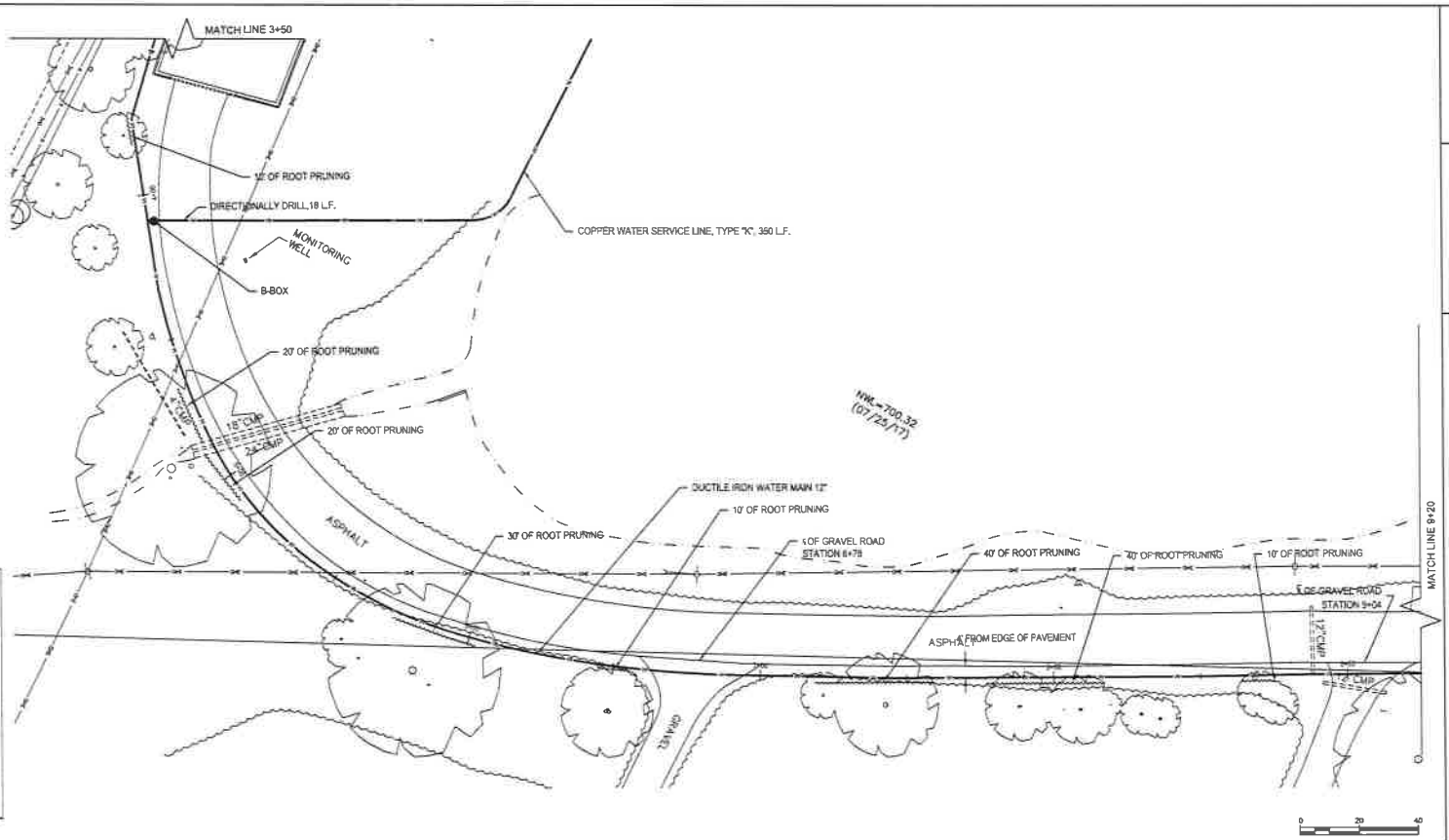

MAXIMUM PAVEMENT WIDTHS

CONDUIT DIA	MAX PAY WIDTH (FT)	
	FRENCH	PATCHING*
6"	3.6	5.6
8"	3.8	5.8
10"	3.9	5.9
12"	4.2	6.2
16"	4.4	6.4
30"	4.7	6.7

*TWO (2) SAW CUTS ARE REQUIRED AS PART OF PAVEMENT REMOVAL AND PATCHING OPERATIONS

1) 1ST CUT SHALL BE DONE AT TRENCH LIMITS PRIOR TO TRENCHING

2) 2ND CUT SHALL BE DONE AT PATCH LIMITS IMMEDIATELY PRIOR TO PERMANENT PATCHING

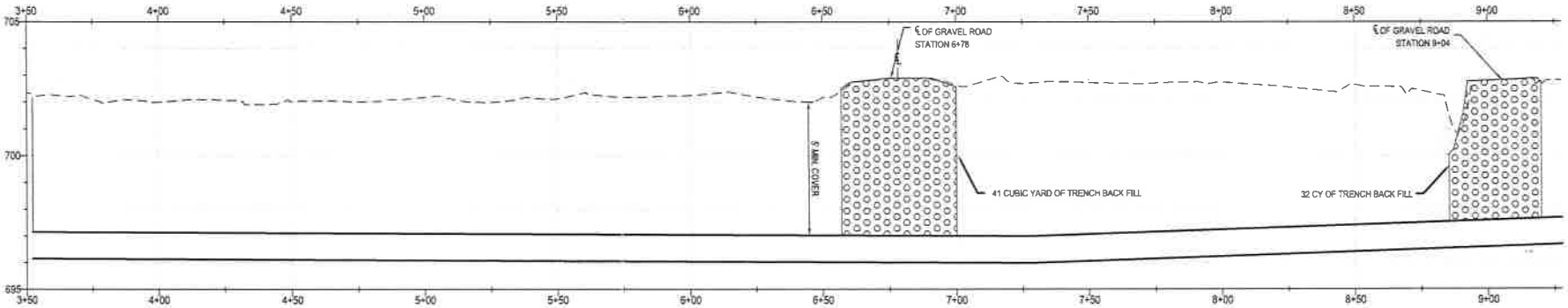

CITY OF NAPERVILLE DEPARTMENT OF PUBLIC UTILITIES
CIVIL ENVIRONMENTAL ENGINEERING AND CONSTRUCTION MANAGEMENT DIVISION

GREEN ACRES WATER MAIN IMPROVEMENTS
PLAN AND PROFILE

REVISIONS

NUMBER	BY	DATE

DESIGN BY:	A. JASINSKI
DRAWN BY:	C. VILLALOBOS
CHECKED BY:	A. JASINSKI
APPROVED BY:	A. RIES
DATE:	09-05-2017
JOB No:	SID 17-190

SHEET 5 OF 8 SHEETS

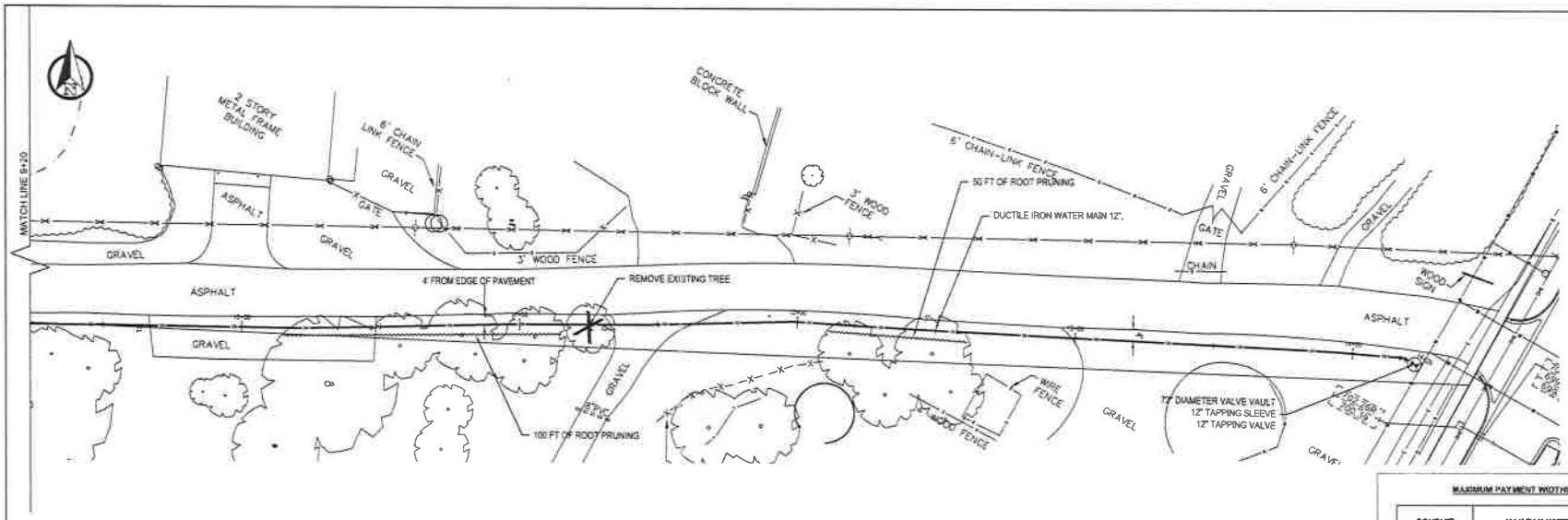

MAXIMUM PAYMENT WIDTHS

CONDUIT DIA	MAX PAY WIDTH (FT)	
	TRENCH	PATCHING*
6"	3.0	5.6
8"	3.8	5.8
10"	3.9	5.9
12"	4.2	6.2
16"	4.4	6.4
20"	4.7	6.7

*TWO (2) SAW CUTS ARE REQUIRED AS PART OF PAVEMENT REMOVAL AND PATCHING OPERATIONS

1) 1ST CUT SHALL BE DONE AT TRENCH LIMITS PRIOR TO TRENCHING

2) 2ND CUT SHALL BE DONE AT PATCH LIMITS IMMEDIATELY PRIOR TO PERMANENT PATCHING

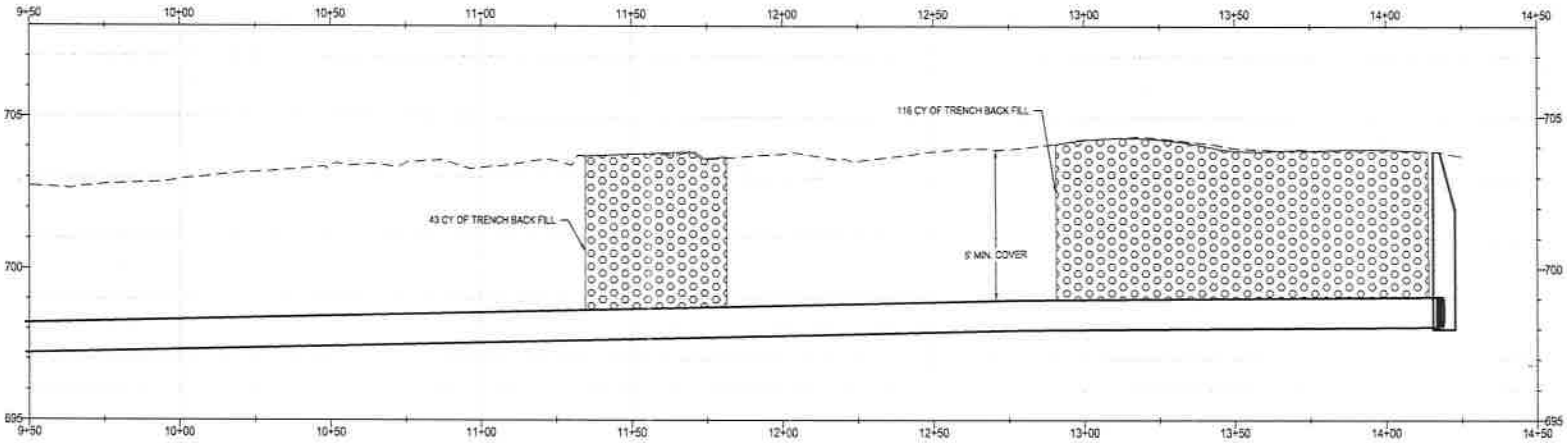

0 20' 40'

CITY OF NAPERVILLE DEPARTMENT OF PUBLIC UTILITIES
CIVIL ENVIRONMENTAL ENGINEERING AND CONSTRUCTION MANAGEMENT DIVISION

GREEN ACRES WATER MAIN IMPROVEMENTS
PLAN AND PROFILE

REVISIONS

NUMBER	BY	DATE

DESIGN BY:	A. JASINSKI
DRAWN BY:	G.VILLALOBOS
CHECKED BY:	A. JASINSKI
APPROVED BY:	A.RIES
DATE:	09-05-2017
JOB No:	BID 17-190

SHEET 6 OF 8 SHEETS

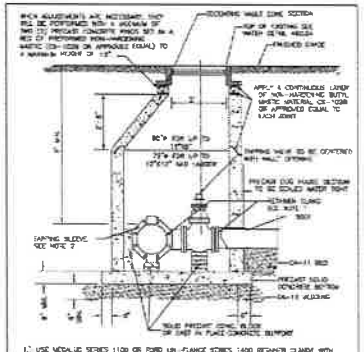

1.) USE MEGALUG SERIES 1100 OR FORD UNI-FLANGE SERIES 1400 REGAINOR CLAMP WITH STAINLESS BOLTS (-BOLTS COATED WITH ANTI-SEIZE COMPOUND)
2) TAPPING SLEEVES SHALL BE CAST OF DUCTILE IRON MECHANICAL JOINT CONFORMING TO ANSI/AWWA C110/A21.10-82 (TYPE/ALUMINUM OR APPROVED EQUAL). EXISTING PIPE TO BE DISINFECTED PRIOR TO INSTALLATION OF TAPPING SLEEVE. TAPPING SLEEVE TO BE PRESSURE TESTED HYDROSTATICALLY TO OPERATING PRESSURE PLUS 50 PSI(MIN OR 150 PSI) BEFORE MAKING PRESSURE CONNECTION.
3) EXISTING PIPE TO BE DISINFECTED PRIOR TO INSTALLATION OF TAPPING SLEEVE AND TAPPING SLEEVE IS TO BE PRESSURE TESTED TO OPERATING PRESSURE PLUS 50 PERCENT PRIOR TO MAKING PRESSURE CONNECTION.
4) DO NOT USE STAINLESS STEEL SLEEVE ON SIZE TAPS ON PIPES LARGER THAN 12" DIAMETER
5) IN THE EVENT IT IS NECESSARY TO USE A PRECAST SPLIT BOTTOM FLOOR DUE TO SPACE CONSTRAINTS THE FLOOR MUST BE GROUTED WATER TIGHT
6) TAPPING VALVES SHALL CONFORM TO C515-00 OF LATEST REVISION AMERICAN SUPPLY 2500 RESILIENT WEDGE TAPPING VALVES WITH FLANGED & MECHANICAL JOINT ENDS OF APPROVED EQUAL.

City of Naperville STANDARD DETAIL | VALVE VAULT WITH CAST/DUCTILE IRON SLEEVE PRESSURE TAP | 490.02

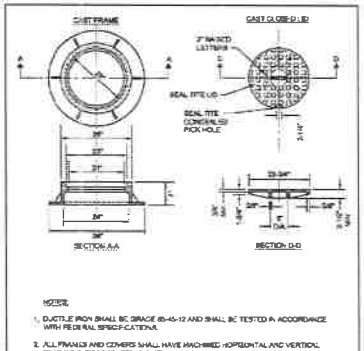

NOTES:
1. DUCTILE IRON SHALL BE GRADE 65-45-12 AND SHALL BE TESTED IN ACCORDANCE WITH FEDERAL SPECIFICATIONS.
2. ALL FRAMES AND COVERS SHALL HAVE MACHINED HORIZONTAL AND VERTICAL BEARING SURFACES. PICK HOLES SHALL NOT CREATE OPENINGS IN THE COVER.
3. THE MANHOLE COVERS SHALL HAVE RAISED LETTERS AS SHOWN.
4. ALTERNATIVE TO DUCTILE IRON U.S. GREY IRON CL 30 U.S. MAY BE USED.
5. DIMENSIONS FOR CASTINGS ARE COMPATABLE TO SAINT JORDAN 1227 OR NEENAH R-1772-C, HEAVY DUTY.
6. LIDS AND FRAMES TO MEET AASHTO MOD PROOF LOADING SPECIFICATIONS

City of Naperville STANDARD DETAIL | VALVE VAULT - FRAME & COVER | 490.04

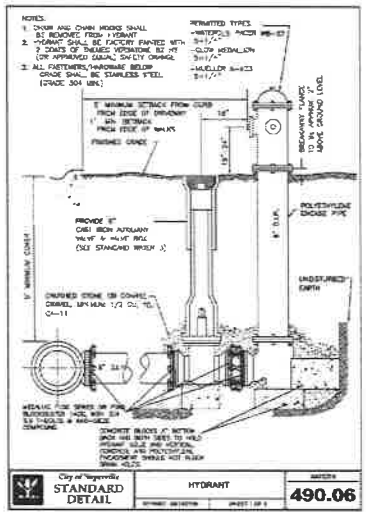

City of Naperville STANDARD DETAIL | HYDRANT | 490.06

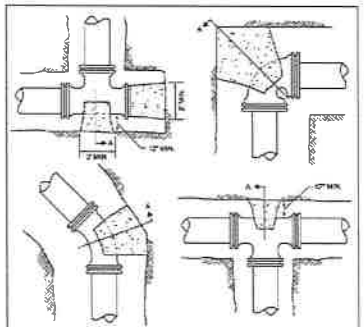

1. THRUST BLOCKING TO PREVENT MOVEMENT OF LINES UNDER PRESSURE AT BENDS, STEEL CAPS, VALVES, HYDRANTS, & AT POINTS SPECIFIED BY THE ENGINEER SHALL BE CLASS "B".
2. CONCRETE A MINIMUM OF 12" THICK PLACED BETWEEN SOLID GROUND & THE FITTING AND SHALL BE ANCHORED IN SUCH A MANNER THAT THE PIPE AND FITTING WILL BE ACCESSIBLE FOR REPAIRS.
3. THRUST BLOCKS SHALL BE PLACED AT BENDS OF 10-1/4" OR MORE.
4. PIPE BENDS TO BE POLYETHYLENE ENCASED
5. JOINT RESTRAINT AT BEND AND LENGTH OF PIPE EACH DIRECTION FROM BENDS AS REQUIRED BY THE CITY OF NAPERVILLE IF UNSUITABLE SOIL NOT PRESENT.
6. THRUST BLOCK FOR PIPES LARGER THAN 12" MUST BE POURED IN PLACE

City of Naperville STANDARD DETAIL | THRUST BLOCK | 490.11

CUT A SECTION OF POLYETHYLENE TUBE APPROXIMATELY TWO FEET LONGER THAN THE PIPE SECTION. REMOVE ALL LUMPS OF CLAY, MUD, CINDERS, OR OTHER MATERIAL THAT MIGHT HAVE ACCUMULATED ON THE PIPE SURFACE DURING STORAGE. SLIP THE POLYETHYLENE TUBE ABOUNDS THE PIPE, STARTING AT THE SPIGOT END. BEHIND THE TUBE ACCORD ON—FASH ON ON THE END OF THE PIPE. PULL BACK THE OVERHANGING END OF THE TUBE UNTIL IT COLLARS THE PIPE END

MAKE THE OVERLAP OF THE POLYETHYLENE TUBE BY PULLING BACK THE SLACKED POLYETHYLENE FROM THE PRECEDING LENGTH OF PIPE AND SECURING IT IN PLACE. NOTE: THE POLYETHYLENE MAY BE SECURED IN PLACE BY USING TAPE, STRING, PLASTIC TIE STRAPS, OR ANY OTHER MATERIAL CAPABLE OF HOLDING THE POLYETHYLENE UNDISTURBED TIGHTLY AGAINST THE PIPE

TAKE UP SLACK IN THE TUBE ALONG THE BODY OF THE PIPE TO MAKE A SNUG, BUT NOT TIGHT, FIT. FOLD EXCESS POLYETHYLENE BACK OVER THE TOP OF THE PIPE

REPAIR ALL TAPE, PATCH OR TEAR WITH TAPE SUPPLIED BY MANUFACTURER APPROVED POLYETHYLENE TAPE

1. COVER BENDS, REDUCERS AND OTHER HYDRAULIC APPURTENANCES WITH
2. WRAP VALVES, TEES AND OTHER BOD-SHAPED APPURTENANCES WITH A FLAT SHEET OR SPLIT LENGTH OF POLYETHYLENE TUBE BY PASSING THE SHEET UNDER THE APPURTENANCE AND BRINGING IT UP AROUND THE BODY. MAKE SEAMS BY BRINGING THE EDGES OF THE POLYETHYLENE SHEET TOGETHER, FOLDING OVER THREE, AND TAPING DOWN
3. FOLD OVER AND TAPE ALONG THE TOP OF THE PIPE IN ACCORDANCE WITH ANSI/AWWA C105/A21.5 VERSION
4. COPPER SCRAPE TAPE ARE TO BE WRAPPED WITH POLYETHYLENE OR A SUITABLE DIELECTRIC TAPE FOR A MINIMUM CLEAR DISTANCE OF 3" AWAY FROM THE MAIN.

City of Naperville STANDARD DETAIL | POLYETHYLENE ENCASEMENT | 490.15

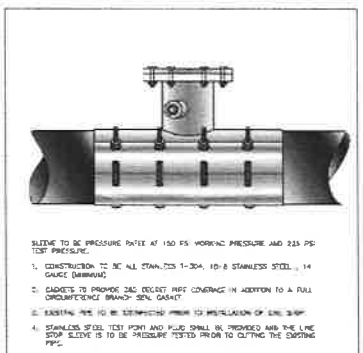

SLEEVE TO BE PRESSURE RATED AT 150 PSI WORKING PRESSURE AND 225 PSI TEST PRESSURE.

1. CONSTRUCTION TO BE ALL STAINLESS 1-304, 10-8 STAINLESS STEEL, 14 GAUGE (MINIMUM)
2. GASKETS TO PROVIDE GAS TIGHT RIPP COVERAGE IN ADDITION TO A FULL CIRCUMFERENCE BRAND- SEAL GASKET
3. EXISTING PIPE TO BE DISINFECTED PRIOR TO INSTALLATION OF LINE STOP
4. STAINLESS STEEL TEST POINT AND PLUG SHALL BE PROVIDED AND THE LINE STOP SLEEVE IS TO BE PRESSURE TESTED PRIOR TO CUTTING THE EXISTING PIPE.
5. V-LUGS SHALL BE FABRICATED TO THE SLEEVE AND DROP-IN STAINLESS STEEL BOLTS, NUTS AND WASHERS (18-8 MINIMUM GRADE) PROVIDED NUTS SHALL BE COATED WITH ANTI-SEIZE COMPOUND TO PREVENT GALLING.
6. PROVIDE AS-BUILT FOR LOCATION AND ELEVATION OF TOP OF FLANGE ON RECORD DRAWINGS
7. ACCEPTABLE LINE STOP SLEEVES ARE HYDRA STOP PREMIER LINE STOP FITTING 0" ALL STAINLESS STEEL CONSTRUCTION WITH DROP-IN BOLT OPTION AND SMITH BLAIR MODEL 662 ALL STAINLESS STEEL LINE STOP TAPPING SLEEVES WITH ALL BOLTS, NUTS, AND WASHERS AND BLIND FLANGES TO BE 18-8 TYPE 304 STAINLESS. STOPPLE (COMPATIBLE) PLUG TO BE DUCTILE IRON OR STAINLESS STEEL.

City of Naperville STANDARD DETAIL | LINE STOP TAPPING SLEEVE | 490.17

CITY OF NAPERVILLE DEPARTMENT OF PUBLIC UTILITIES
CIVIL ENVIRONMENTAL ENGINEERING AND CONSTRUCTION MANAGEMENT DIVISION

GREEN ACRES WATER MAIN IMPROVEMENTS
STANDARD DETAILS

REVISIONS

NUMBER	BY	DATE

DESIGN BY:	A. JASINSKI
DRAWN BY:	G.VILLALOBOS
CHECKED BY:	
APPROVED BY:	
DATE:	09-05-2017
JOB No:	BID 17-190

SHEET 7 OF 8 SHEETS

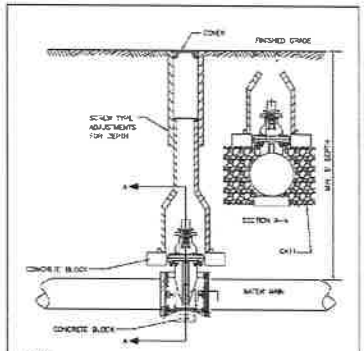

NOTES:

1. TYLER 6850 OR APPROVED EQUAL. FOR 16" AND UP VALVES, TYLER 6860 OR APPROVED EQUAL WITH 36" BASE.
2. VALVE BOXES MAY NOT ALLOWED IN PAVED AREAS – VALVE VAULT SHALL BE PROVIDED. CONTRACTOR SHALL SUBMIT IN WRITING AND LOCATION WHERE A VAULT IS NOT INTENDED TO BE INSTALLED AND SPECIFIC REASON WHY IT CANNOT BE INSTALLED. THIS MUST BE APPROVED BY WRITING BY DPU-WATER.
3. RESTRAINT CLAMPS REQUIRED ON EACH SIDE OF VALVE IF STUBBED FOR FUTURE CONNECTION OR PIPE BEND WITHIN TWO PIPE LENGTHS OF VALVE.

City of Naperville STANDARD DETAIL | VALVE BOX | 490.05

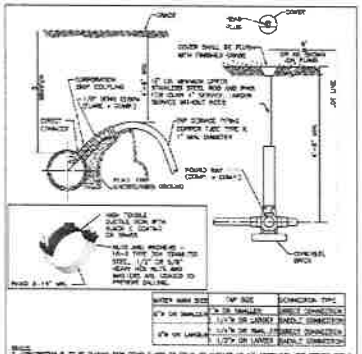

City of Naperville STANDARD DETAIL | SERVICE TAP AND CONNECTION | 490.20

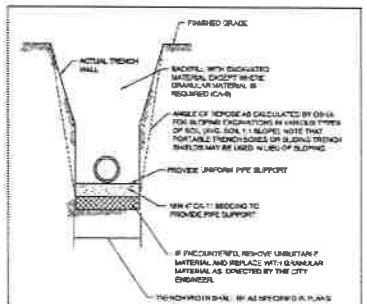

NOTES:

1. IN PAVED AREAS ALL TRENCHES SHALL BE COMPACTED IN ACCORDANCE WITH SECTION 550.07 OF THE IDOT STANDARD SPECIFICATIONS FOR ROAD AND BRIDGE CONSTRUCTION METHOD 1 95% MINIMUM STANDARD PROCTOR.
2. DUCTILE IRON WATER MAIN TO BE CLASS 52. ALL DUCTILE IRON PIPE IS TO BE ENCASED IN POLYETHYLENE FILM, POLYETHYLENE ENCASEMENT TO BE INSTALLED IN ACCORDANCE WITH AWWA/ANSI C-105 (OR LATEST EDITION)
3. STAINLESS STEEL NUTS, BOLTS(T-BOLTS), AND WASHERS, TYPE 304 OR BETTER, WILL BE REQUIRED ON ALL WATER MAIN INSTALLATIONS. THIS WOULD APPLY TO HYDRANTS, "APPING SLEEVES, VALVES, FITTINGS, RESTRAINT, AND OTHER APPURTENANCES BURIED OR IN VALVE VAULTS. MECHANICAL JOINTS AND RESTRAINT GLANDS REQUIRE 304 STAINLESS STEEL T-BOLTS. AN ANTI-SEIZE COMPOUND SHALL BE FACTORY APPLIED TO NUTS OR BOLTS. ANY DAMAGE TO THIS COATING SHALL BE REPAIRED WITH FIELD-APPLIED, APPROVED ANTI-SEIZE COMPOUND THAT IS A MOLYBDENUM-BASE, LUBRICANT, SOBITHE NEVER-SEIZ OR APPROVED EQUAL.

City of Naperville STANDARD DETAIL | WATER MAIN TRENCH SECTION | 490.10

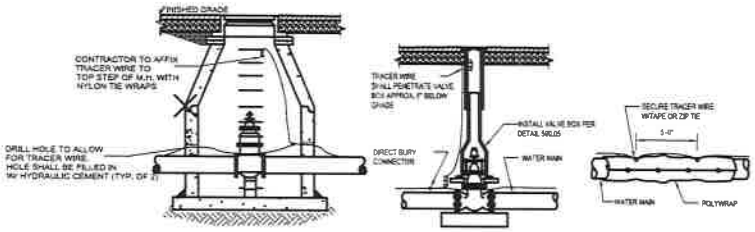

NOTES:

1. REINFORCED TRACER WIRE SHALL BE INSTALLED IN ACCORDANCE WITH THE MANUFACTURER'S RECOMMENDATIONS.
2. TRACER WIRE SHALL HAVE A COPPER CLAD STEEL CONDUCTOR, INSULATED WITH A 30 MIL (MIN). HIGH-DENSITY, HIGH MOLECULAR WEIGHT POLYETHYLENE (HDPE) COATING, AND RATED FOR DIRECT BURIAL USE AT 30 VOLTS. INSULATION COLOR SHALL MEET THE APWA COLOR CODE STANDARD FOR IDENTIFICATION OF BURIED UTILITIES. TRACER WIRE SHALL BE COPPERHEAD #12 HS-CCS TRACER WIRE. TRACE-SAFE WATER BLOCKING TRACER WIRE OR APPROVED EQUIVALENT.
3. DIRECT BURY CONNECTORS SHALL BE COPPERHEAD SNAKEBITE OR APPROVED EQUAL.

TRACER WIRE DETAIL

N.T.S

CITY OF NAPERVILLE DEPARTMENT OF PUBLIC UTILITIES
CIVIL ENVIRONMENTAL ENGINEERING AND CONSTRUCTION MANAGEMENT DIVISION

GREEN ACRES WATER MAIN IMPROVEMENTS
STANDARD DETAILS

REVISIONS

NUMBER	BY	DATE

DESIGN BY:	A. JASINSKI
DRAWN BY:	C.VILLALOBOS
CHECKED BY:	
APPROVED BY:	
DATE:	09-05-2017
JOB No:	BID 17-190

SHEET 8 OF 8 SHEETS