FINAL ENGINEERING PLANS
CASEY'S NAPERVILLE #6531
20 E. OGDEN AVE
NAPERVILLE, IL 60563

Call Before You Dig JULIE 1-800-892-0123

UTILITY AND GOVERNING AGENCY CONTACTS

TRANSPORTATION ENGINEERING DEVELOPMENT
CITY OF NAPERVILLE
400 S. EAGLE ST
NAPERVILLE, IL 60540
TEL: (630) 420-6043
CONTACT: GABRIELLE MATTINGLY, AICP

SANITARY SEWER SERVICE
DEPARTMENT OF PUBLIC WORKS
400 S. EAGLE ST
NAPERVILLE, IL 60540
TEL: (630) 420-4122
CONTACT: BILL BOLSTER

STORM SEWER SERVICE
DEPARTMENT OF PUBLIC WORKS
400 S. EAGLE ST
NAPERVILLE, IL 60540
TEL: (630) 420-4122
CONTACT: BILL BOLSTER

WATER SERVICE
DEPARTMENT OF PUBLIC WORKS
400 S. EAGLE ST
NAPERVILLE, IL 60540
TEL: (630) 420-4122
CONTACT: BILL BOLSTER

ELECTRIC SERVICE
NAPERVILLE ELECTRIC UTILITY
1392 AURORA SUITE 100
NAPERVILLE, IL 60540
TEL: (630) 420-6653
CONTACT: BEN HENDRON

ROADWAY AUTHORITY
ILLINOIS DEPARTMENT OF TRANSPORTATION
201 WEST CENTER COURT
SCHAUMBURG, IL 60196
TEL: (847) 705-4131
CONTACT: JONATHAN E. KARABOWICZ, P.E.

POWER COMPANY
DEPARTMENT OF PUBLIC UTILITIES
1392 AURORA AVENUE
NAPERVILLE, IL 60540
TEL: (630) 420-6181
CONTACT: RON RITTER

NATURAL GAS COMPANY
NICOR
1844 FERRY RD
NAPERVILLE, IL 60563
TEL: (888) 642-6748

TELEPHONE
AT&T
TEL: (844) 931-0107

PROJECT TEAM

DEVELOPER
CASEY'S RETAIL COMPANY
1 SE CONVENIENCE BLVD.
ANKENY, IA 50021
TEL: (515) 318-9944
CONTACT: RICHARD MCMAHON

TRAFFIC ENGINEER
KIMLEY-HORN AND ASSOCIATES, INC.
4201 WINFIELD RD, SUITE 600
WARRENVILLE, IL 60555
TEL: (630) 487-3435
EMAIL: EMMA.ALBERS@KIMLEY-HORN.COM
CONTACT: EMMA ALBERS

CIVIL ENGINEER
KIMLEY-HORN AND ASSOCIATES, INC.
570 LAKE COOK RD, SUITE 200
DEERFIELD, IL 60015
TEL: (630) 487-5550
EMAIL: ERIC.TRACY@KIMLEY-HORN.COM
CONTACT: ERIC TRACY, P.E.
EMAIL: IAN.SPENCE@KIMLEY-HORN.COM
CONTACT: IAN SPENCE, P.E.

LANDSCAPE ARCHITECT
KIMLEY-HORN AND ASSOCIATES, INC.
570 LAKE COOK RD, SUITE 200
DEERFIELD, IL 60015
TEL: (630) 487-5550
CONTACT: AMANDA MCABEE, P.L.A.

SURVEYOR
COMPASS SURVEYING LTD.
2631 GINGER WOODS PARKWAY, SUITE 100
AURORA, IL 60502
TEL: (630) 820-7030
CONTACT: SCOTT KREBS, P.L.S.

LEGAL DESCRIPTION

LOTS 15, 16, 17 (EXCEPT THE WESTERLY 17.0 FEET THEREOF) AND LOT 18 (EXCEPT THE WESTERLY 17.0 FEET AND EXCEPT THE NORTHERLY 17.0 FEET THEREOF) IN BLOCK 4 IN PARK ADDITION TO NAPERVILLE, BEING A SUBDIVISION OF PART OF THE SOUTHEAST QUARTER OF SECTION 12 AND THE NORTHEAST QUARTER OF SECTION 13, TOWNSHIP 38 NORTH, RANGE 9 EAST OF THE THIRD PRINCIPAL MERIDIAN AND PART OF THE SOUTHWEST QUARTER OF SECTION 7 AND THE NORTHWEST QUARTER OF SECTION 18, TOWNSHIP 38 NORTH, RANGE 10 EAST OF THE THIRD PRINCIPAL MERIDIAN, ACCORDING TO THE PLAT THEREOF RECORDED JULY 26, 1873 AS DOCUMENT 16618, IN DUPAGE COUNTY, ILLINOIS

LOCATION MAP
(NOT TO SCALE)

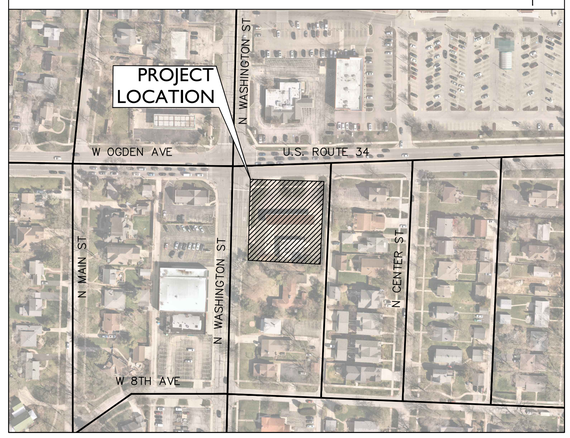

LIST OF HIGHWAY STANDARDS	
606001-08	701701-10
701801-06	701901-10
IDOT DISTRICT 1 DETAILS	
TC-13	

BENCHMARKS

SITE BENCHMARKS:

SITE BENCHMARK #1
SQUARE CUT ON NORTH SIDE OF LIGHT POLE BASE SOUTH OF THE SOUTH ENTRANCE ALONG WASHINGTON AVENUE
ELEVATION = 707.82

SITE BENCHMARK #2
SQUARE CUT ON WEST SIDE OF LIGHT POLE EAST OF THE EAST ENTRANCE ALONG OGDEN AVENUE
ELEVATION = 710.27

REFERENCE BENCHMARK:
CITY OF NAPERVILLE SURVEY MONUMENT 1506

LOCATED BETWEEN 5TH AND 6TH AVENUE WEST SIDE OF MILL STREET

DATUM: NAVD88
ELEVATION = 690.61

Sheet List Table

Sheet Number	Sheet Title
C-001	TITLE SHEET
C-002	GENERAL NOTES
C-003	ALTA SURVEY
C-004	TOPOGRAPHIC SURVEY
C-100	EXISTING CONDITIONS & DEMO PLAN
4 C-101	SITE PLAN
C-201	GRADING PLAN
C-202	IDOT ADA GRADING DETAIL
4 C-301	UTILITY PLAN
C-401	EROSION CONTROL PLAN
C-402	EROSION CONTROL PLAN DETAILS
C-601	CASEY'S DETAILS
C-602	CASEY'S DETAILS
C-603	CONSTRUCTION DETAILS - STORM SEWER
C-604	CONSTRUCTION DETAILS - SANITARY & WATERMAIN
C-605	CONSTRUCTION DETAILS - SANITARY & WATERMAIN
C-606	CONSTRUCTION DETAILS - PAVEMENT & MISCELLANEOUS
4 C-607	CONSTRUCTION DETAILS - PAVEMENT & MISCELLANEOUS
C-607A	CONSTRUCTION DETAILS - PAVEMENT & MISCELLANEOUS
C-608	CONSTRUCTION DETAILS - ELECTRIC
C-609	IDOT CONSTRUCTION DETAILS
C-610	IDOT CONSTRUCTION DETAILS
C-611	IDOT CONSTRUCTION DETAILS

PROFESSIONAL ENGINEER'S CERTIFICATION

I, IAN SPENCE, A LICENSED PROFESSIONAL ENGINEER OF IL, HEREBY CERTIFY THAT THIS SUBMISSION, PERTAINING ONLY TO THE "C" SERIES CIVIL SHEETS LISTED ABOVE BUT EXCLUDING DETAILS PREPARED BY OTHERS, WAS PREPARED ON BEHALF OF CASEY'S BY KIMLEY-HORN AND ASSOCIATES, INC. UNDER MY PERSONAL DIRECTION. THIS TECHNICAL SUBMISSION IS INTENDED TO BE USED AS AN INTEGRAL PART OF AND IN CONJUNCTION WITH THE PROJECT SPECIFICATIONS AND CONTRACT DOCUMENTS.

DATED THIS 7TH DAY OF JULY, A.D., 2025.

Ian Spence
IL LICENSED PROFESSIONAL ENGINEER 062-076630
MY LICENSE EXPIRES ON NOVEMBER 30, 2025
DESIGN FIRM REGISTRATION NUMBER: 184002012-0006

LICENSED PROFESSIONAL ENGINEER OF ILLINOIS
IAN N. SPENCE
062-076630

NO.	REVISIONS	DATE	BY
1	REVISED PER SITE CHANGES	07/07/25	JTA
2	REVISED PER CITY	05/14/25	JTA
3	REVISED PER CITY	04/10/25	JTA
4	REVISED PER IDOT & CITY	03/07/25	INS
5	REVISED PER CITY	11/26/24	INS

Kimley»Horn
© 2024 KIMLEY-HORN AND ASSOCIATES, INC.
570 LAKE COOK ROAD, SUITE 200
DEERFIELD, IL 60015
PHONE: 847-520-9004
WWW.KIMLEY-HORN.COM

SCALE: AS NOTED
DESIGNED BY: JTA
DRAWN BY: TVC
CHECKED BY: INS

Casey's

TITLE SHEET

CASEY'S NAPERVILLE #6531
20 E. OGDEN AVE
NAPERVILLE, IL 60563

ORIGINAL ISSUE: 10/01/2024
KHA PROJECT NO. 168865042
SHEET NUMBER
C-001

Improper reliance on this document without written authorization and adaptation by Kimley-Horn and Associates, Inc. shall be without liability to Kimley-Horn and Associates, Inc.
Drawing name: K:\CHS_IDEV\168865042_Casey's_6531_Naperville_IL\2 Design\CAD\PlanSheets\C00 TITLE SHEET.dwg C-001 Jul 03, 2025 12:07pm by Jake.Antony
This document, together with the concepts and designs presented herein, as an instrument of service, is intended only for the specific purpose and client for which it was prepared. Reuse of and improper reliance

Improper reliance on this document without written authorization and adaptation by Kimley-Horn and Associates, Inc. shall be without liability to Kimley-Horn and Associates, Inc.

Drawing name: K:\CHS_LDEV\168865042_Casey's_6531_Naperville_IL\2 Design\CAD\PlanSheets\C-002 GENERAL NOTES.dwg C-002 Jul 03, 2025 12:07pm jake.Antony
This document, together with the concepts and designs presented herein, as an instrument of service, is intended only for the specific purpose and client for which it was prepared. Reuse of and improper reliance

GENERAL NOTES

1. EXISTING SITE TOPOGRAPHY, UTILITIES, RIGHT-OF-WAY AND HORIZONTAL CONTROL SHOWN ON THE DRAWINGS WERE OBTAINED FROM A SURVEY PREPARED BY:

   COMPASS SURVEYING LTD.
   2631 GINGER WOODS PKWY, SUITE 100
   AURORA, IL 60502
   TEL: (630) 820-7030

   COPIES OF THE SURVEY ARE AVAILABLE FROM THE ENGINEER. SITE CONDITIONS MAY HAVE CHANGED SINCE THE SURVEY WAS PREPARED. CONTRACTORS TO MUST SITE TO FAMILIARIZE THEMSELVES WITH THE CURRENT CONDITIONS.
2. COPIES OF SOILS INVESTIGATION REPORTS MAY BE OBTAINED FROM THE OWNER. ANY BRACING, SHEETING OR SPECIAL CONSTRUCTION METHODS DEEMED NECESSARY BY THE CONTRACTOR IN ORDER TO INSTALL THE PROPOSED IMPROVEMENTS SHALL BE CONSIDERED INCIDENTAL TO THE COST OF THE PROJECT. ANY ADDITIONAL SOILS DATA NEEDED TO CONFIRM THE CONTRACTOR'S OPINIONS OF THE SUBSOIL CONDITIONS SHALL BE DONE AT THE CONTRACTOR'S EXPENSE. THE CONTRACTOR SHALL OBTAIN THE OWNER'S WRITTEN AUTHORIZATION TO ACCESS THE SITE TO CONDUCT A SUPPLEMENTAL SOILS INVESTIGATION.
3. THE CONTRACTOR SHALL PHOTOGRAPH THE WORK AREA PRIOR TO CONSTRUCTION FOR THE PURPOSE OF DOCUMENTING EXISTING CONDITIONS.
4. EXCEPT WHERE MODIFIED BY THE CONTRACT DOCUMENTS, ALL PROPOSED WORK SHALL BE CONSTRUCTED IN ACCORDANCE WITH THE FOLLOWING SPECIFICATIONS WHICH ARE HEREBY MADE A PART HEREOF:
   A. "STANDARD SPECIFICATIONS FOR ROAD AND BRIDGE CONSTRUCTION IN ILLINOIS," AS PREPARED BY IDOT, LATEST EDITION.
   B. "STANDARD SPECIFICATIONS FOR WATER AND SEWER MAIN CONSTRUCTION IN ILLINOIS" AS PUBLISHED BY THE ILLINOIS ENVIRONMENTAL PROTECTION AGENCY (IEPA), LATEST EDITION.
   C. "ILLINOIS RECOMMENDED STANDARDS FOR SEWAGE WORKS," AS PUBLISHED BY THE ILLINOIS ENVIRONMENTAL PROTECTION AGENCY (IEPA), LATEST EDITION.
   D. REGULATIONS, STANDARDS AND GENERAL REQUIREMENTS SET FORTH BY THE MUNICIPALITY, UNLESS OTHERWISE NOTED ON THE PLANS.
   E. THE NATIONAL ELECTRC CODE.
   F. ALL APPLICABLE PROVISIONS OF THE OCCUPATIONAL SAFETY AND HEALTH ACT ARE HEREIN INCORPORATED BY REFERENCE.
5. STANDARD SPECIFICATIONS, SUPPLEMENTAL SPECIFICATIONS, AND RECURRING SPECIAL PROVISIONS, CONSTRUCTION PLANS, AND SUBSEQUENT DETAILS ARE ALL TO BE CONSIDERED AS PART OF THE CONTRACT. INCIDENTAL ITEMS OR ACCESSORIES NECESSARY TO COMPLETE THE CONTRACTOR'S WORK MAY NOT BE SPECIFICALLY NOTED, BUT ARE CONSIDERED A PART OF THE CONTRACTOR'S CONTRACT.
6. IT SHALL BE THE RESPONSIBILITY OF THE CONTRACTOR TO ENSURE THAT ALL ITEMS REQUIRED FOR CONSTRUCTION OF THE PROJECT, AS SHOWN ON THE PLANS, ARE INCLUDED IN THE CONTRACT. ANY ITEM NOT SPECIFICALLY INCLUDED IN THE CONTRACT, BUT SHOWN ON THE PLANS, SHALL BE CONSIDERED INCIDENTAL TO THE CONTRACT. THE CONTRACTOR SHALL NOTIFY THE ENGINEER IMMEDIATELY IN THE EVENT OF A DISCREPANCY WITH THE PLANS AND QUANTITIES.
7. THE CONTRACTOR IS RESPONSIBLE FOR HAVING A SET OF "APPROVED" ENGINEERING PLANS WITH THE LATEST REVISION DATE ON THE JOB SITE AT THE START OF CONSTRUCTION. IF THERE ARE ANY DISCREPANCIES WITH WHAT IS SHOWN ON THE CONSTRUCTION PLANS, HE MUST IMMEDIATELY REPORT THEM TO THE SURVEYOR OR ENGINEER BEFORE DOING ANY WORK. OTHERWISE, THE CONTRACTOR ASSUMES FULL RESPONSIBILITY. IN THE EVENT OF DISAGREEMENT BETWEEN THE CONSTRUCTION PLANS, SPECIFICATIONS, AND/OR SPECIAL DETAILS, THE CONTRACTOR SHALL SECURE WRITTEN INSTRUCTION FROM THE ENGINEER PRIOR TO PROCEEDING WITH ANY PART OF THE WORK AFFECTED BY OMISSIONS OR DISCREPANCIES. FAILING TO SECURE SUCH INSTRUCTION, THE CONTRACTOR WILL BE CONSIDERED TO HAVE PROCEEDED AT THE CONTRACTOR'S OWN RISK AND EXPENSE. IN THE EVENT OF ANY DOUBT OR QUESTIONS ARISING WITH RESPECT TO THE TRUE MEANING OF THE CONSTRUCTION PLANS OR SPECIFICATIONS, THE DECISION OF THE ENGINEER SHALL BE FINAL AND CONCLUSIVE.
8. THE CONTRACTOR SHALL SUBSCRIBE TO ALL GOVERNING REGULATIONS AND SHALL OBTAIN ALL NECESSARY PUBLIC AGENCY PERMITS PRIOR TO STARTING WORK. THE CONTRACTOR, BY USING THESE PLANS FOR THEIR WORK, AGREE TO HOLD HARMLESS KIMLEY-HORN AND ASSOCIATES, INC, THE MUNICIPALITY, THEIR EMPLOYEES AND AGENTS AND THE OWNER FROM AND AGAINST ANY AND ALL LIABILITY, CLAIMS, DAMAGES, AND THE COST OF DEFENSE ARISING OUT OF CONTRACTOR(S) PERFORMANCE OF THE WORK DESCRIBED HEREIN.
9. THE ENGINEER AND OWNER ARE NOT RESPONSIBLE FOR THE CONSTRUCTION MEANS, METHODS, TECHNIQUES, SEQUENCES OR PROCEDURES, TIME OF PERFORMANCE, PROGRAMS OR FOR ANY SAFETY PRECAUTIONS USED BY THE CONTRACTOR. THE CONTRACTOR IS SOLELY RESPONSIBLE FOR ENCESS TON OF THE WORK IN ACCORDANCE WITH THE CONTRACT DOCUMENTS AND SPECIFICATIONS.
10. CONSTRUCTION MATERIALS AND/OR EQUIPMENT MAY NOT BE STORED IN THE RIGHT-OF-WAY, AS DIRECTED BY THE OWNER.
11. EASEMENTS FOR THE EXISTING UTILITIES, BOTH PUBLIC AND PRIVATE, AND UTILITIES WITHIN PUBLIC RIGHT-OF-WAYS ARE SHOWN ON THE PLANS ACCORDING TO AVAILABLE RECORDS. THE CONTRACTOR SHALL BE RESPONSIBLE FOR DETERMINING THE EXACT LOCATION OF THESE UTILITY LINES AND THEIR PROTECTION FROM DAMAGE DUE TO CONSTRUCTION OPERATIONS. IF EXISTING UTILITY LINES OF ANY NATURE ARE ENCOUNTERED WHICH CONFLICT WITH LOCATIONS OF THE NEW CONSTRUCTION, THE CONTRACTOR SHALL NOTIFY THE ENGINEER SO THAT THE CONFLICT MAY BE RESOLVED.
12. OWNER SHALL OBTAIN EASEMENTS AND APPROVAL OF PERMITS NECESSARY TO FACILITATE CONSTRUCTION OF THE PROPOSED UTILITIES. THE CONTRACTOR, HOWEVER, SHALL FURNISH ALL REQUIRED BONDS AND EVIDENCE OF INSURANCE NECESSARY TO SECURE THESE PERMITS AND EASEMENTS.
13. THE CONTRACTOR SHALL PRESERVE ALL CONSTRUCTION STAKES UNTIL THEY ARE NO LONGER NEEDED. ANY STAKES DESTROYED OR DISTURBED BY THE CONTRACTOR PRIOR TO THEIR USE SHALL BE RESET BY THE SURVEYOR AT THE CONTRACTOR'S EXPENSE.
14. NOTIFICATION OF COMMENCING CONSTRUCTION:
   14.A. THE CONTRACTOR SHALL NOTIFY AFFECTED GOVERNMENTAL AGENCIES IN WRITING AT LEAST THREE FULL WORKING DAYS PRIOR TO COMMENCEMENT OF CONSTRUCTION. IN ADDITION, THE CONTRACTOR SHALL NOTIFY, AS NECESSARY, ALL TESTING AGENCIES, THE MUNICIPALITY, AND THE OWNER SUFFICIENTLY IN ADVANCE OF CONSTRUCTION.
   14.B. FAILURE OF THE CONTRACTOR TO ALLOW PROPER NOTIFICATION TIME WHICH RESULTS IN THE TESTING COMPANIES TO BE UNABLE TO VISIT THE SITE AND PERFORM TESTING WILL CAUSE THE CONTRACTOR TO SUSPEND THE OPERATION TO BE TESTED UNTIL THE TESTING AGENCY CAN SCHEDULE TESTING OPERATIONS. COST OF SUSPENSION OF WORK SHALL BE BORNE BY THE CONTRACTOR.
15. ALL CONTRACTORS SHALL KEEP ACCESS AVAILABLE AT ALL TIMES FOR ALL EMERGENCY TRAFFIC, AS DIRECTED BY THE MUNICIPALITY.
16. ANY EXISTING SIGNS, LIGHT STANDARDS, AND UTILITY POLES THAT INTERFERE WITH CONSTRUCTION OPERATIONS AND ARE NOT NOTED ON THE PLANS FOR DISPOSAL SHALL BE REMOVED AND RESET BY THE CONTRACTOR AT THE CONTRACTOR'S OWN EXPENSE, AS DIRECTED BY THE ENGINEER. ANY ITEMS DAMAGED BY THE CONTRACTOR SHALL BE REPAIRED OR REPLACED BY THE CONTRACTOR AT THE CONTRACTOR'S OWN EXPENSE TO THE SATISFACTION OF THE OWNER. ANY SIGNS NOT REQUIRED TO BE RESET SHALL BE DELIVERED TO THE RESPECTIVE OWNERS.
17. ALL TREES TO BE SAVED SHALL BE IDENTIFIED PRIOR TO CONSTRUCTION BY THE LANDSCAPE ARCHITECT AND SHALL BE PROTECTED PER DETAIL SECTION SHOWN. THE RIGHT-OF-WAY LINE AND LIMITS OF THE CONTRACTOR'S OPERATIONS SHALL BE CLEARLY DEFINED THROUGHOUT THE CONSTRUCTION PERIOD. ALL TREES NOTED TO REMAIN SHALL BE PROTECTED FROM DAMAGE TO TRUNKS, BRANCHES AND ROOTS. NO EXCAVATING, FILLING OR GRADING IS TO BE DONE INSIDE THE DRIP LINE OF TREES UNLESS OTHERWISE INDICATED.
18. LIMB PRUNING SHALL BE PERFORMED UNDER THE SUPERVISION OF AN APPROVED LANDSCAPE ARCHITECT, FORESTER, OR ARBORIST AND SHALL BE UNDERTAKEN IN A TIMELY FASHION SO AS NOT TO INTERFERE WITH CONSTRUCTION. ALL LIMBS, BRANCHES, AND OTHER DEBRIS RESULTING FROM THE CONTRACTOR'S WORK SHALL BE DISPOSED OF OFF-SITE BY THE CONTRACTOR AT THE CONTRACTOR'S OWN EXPENSE. ALL CUTS OVER ONE (1) INCH IN DIAMETER SHALL BE PAINTED WITH AN APPROVED TREE PAINT.
19. ALL EXISTING PAVEMENT OR CONCRETE TO BE REMOVED SHALL BE SAWCUT ALONG LIMITS OF PROPOSED REMOVAL BEFORE COMMENCEMENT OF PAVEMENT REMOVAL.
20. ALL EXISTING UTILITIES OR IMPROVEMENTS, INCLUDING WALKS, CURBS, PAVEMENT, AND PARKWAYS DAMAGED OR REMOVED DURING CONSTRUCTION SHALL BE PROMPTLY RESTORED TO THEIR RESPECTIVE ORIGINAL CONDITIONS. THE CONTRACTOR'S WORK SHALL BE CONSIDERED INCIDENTAL TO THE CONTRACT UNLESS A PAY ITEM IS LISTED ON THE BID LIST.
21. REMOVAL OF SPECIFIED ITEMS, INCLUDING BUT NOT LIMITED TO, PAVEMENT, SIDEWALK, CURB, CURB AND GUTTER, CULVERTS, ETC., SHALL BE DISPOSED OF OFF-SITE BY THE CONTRACTOR AT THE CONTRACTOR'S OWN EXPENSE. THE CONTRACTOR IS RESPONSIBLE FOR ANY PERMITS REQUIRED FOR SUCH DISPOSAL.
22. THE CONTRACTOR SHALL CLEAN UP AND REMOVE ALL CONSTRUCTION DEBRIS, EXCESS MATERIALS, TRASH, OIL AND GREASE RESIDUE, MACHINERY, TOOLS, AND OTHER MISCELLANEOUS ITEMS WHICH WERE NOT PRESENT PRIOR TO PROJECT COMMENCEMENT AT NO ADDITIONAL EXPENSE TO THE OWNER. THE CONTRACTOR SHALL BE RESPONSIBLE FOR ACQUIRING ANY AND ALL PERMITS NECESSARY FOR THE HAULING AND DISPOSAL REQUIRED FOR CLEANUP, AS DIRECTED BY THE ENGINEER OR OWNER. BURNING ON THE SITE IS NOT PERMITTED.
23. NO UNDERGROUND WORK WITHIN THE PUBLIC RIGHT-OF-WAY SHALL BE COVERED UNTIL IT HAS BEEN APPROVED BY THE MUNICIPALITY. APPROVAL TO PROCEED MUST BE OBTAINED FROM THE MUNICIPALITY PRIOR TO INSTALLING PAVEMENT BASE, BINDER, AND SURFACE, AND PRIOR TO POURING ANY CONCRETE AFTER FORMS HAVE BEEN SET, AS NECESSARY.
24. WHERE SHOWN ON THE PLANS OR DIRECTED BY THE ENGINEER, EXISTING DRAINAGE STRUCTURES AND PIPE SHALL BE CLEANED OF DEBRIS AND PATCHED AS NECESSARY TO ASSURE INTEGRITY OF THE STRUCTURE. THE CONTRACTOR'S WORK SHALL NOT BE PAID FOR SEPARATELY, BUT SHALL BE MERGED INTO THE CONTRACT UNIT PRICE EACH FOR STRUCTURES AND CONTRACT UNIT PRICE PER LINEAL FOOT FOR STORM SEWERS, WHICH SHALL BE PAYMENT IN FULL FOR CLEANING, PATCHING, REMOVAL, AND DISPOSAL OF DEBRIS AND DIRT. DRAINAGE STRUCTURES AND STORM SEWERS CONSTRUCTED AS PART OF THE CONTRACTOR'S PROJECT SHALL BE MAINTAINED BY THE CONTRACTOR AT THE CONTRACTOR'S EXPENSE. NO EXTRA PAYMENT WILL BE MADE FOR CLEANING STRUCTURES OR STORM SEWERS CONSTRUCTED AS PART OF THE CONTRACTOR'S PROJECT.
25. THE CONTRACTOR SHALL BE RESPONSIBLE FOR HAVING THE UTILITY COMPANIES LOCATE THEIR FACILITIES IN THE FIELD PRIOR TO CONSTRUCTION AND SHALL ALSO BE RESPONSIBLE FOR THE MAINTENANCE AND PRESERVATION OF THESE FACILITIES. THE ENGINEER DOES NOT WARRANT THE LOCATION OF ANY EXISTING UTILITIES SHOWN ON THE PLANS. THE CONTRACTOR SHALL CALL J.U.L.I.E. (1-800-892-0123) AND THE MUNICIPALITY FOR UTILITY LOCATIONS.
26. THE GENERAL CONTRACTOR SHALL COORDINATE WITH UTILITY COMPANIES TO PROVIDE CABLE TV, PHONE, ELECTRIC, GAS AND IRRIGATION SERVICES. GENERAL CONTRACTOR SHALL BE RESPONSIBLE FOR SECURING SITE LAYOUTS FOR THESE UTILITIES AND SHALL COORDINATE AND PROVIDE CONDUIT CROSSINGS AS REQUIRED. THIS COORDINATION SHALL BE CONSIDERED INCIDENTAL TO GENERAL CONTRACTOR AGREEMENT WITH THE OWNER. ANY CONFLICTS IN UTILITIES SHALL BE CORRECTED BY THE GENERAL CONTRACTOR AT NO ADDITIONAL COST TO THE OWNER.
27. CONTRACTOR IS TO VERIFY ALL EXISTING STRUCTURES AND FACILITIES AT ALL PROPOSED UTILITY CONNECTION LOCATIONS AND NOTIFY ENGINEER OF ANY DISCREPANCIES PRIOR TO ORDERING MATERIAL AND STARTING WORK.
28. ANY FIELD TILES ENCOUNTERED SHALL BE INSPECTED BY THE ENGINEER. THE DRAIN TILE SHALL BE CONNECTED TO THE STORM SEWER SYSTEM AND A RECORD KEPT BY THE CONTRACTOR OF THE LOCATIONS AND TURNED OVER TO THE ENGINEER UPON COMPLETION OF THE PROJECT. THE COST OF SUCH CONTRACTOR'S WORK SHALL BE CONSIDERED INCIDENTAL TO THE CONTRACT, AND NO ADDITIONAL COMPENSATION SHALL BE ALLOWED.
29. ALL FRAMES AND LIDS FOR STORM AND SANITARY SEWERS, VALVE VAULT COVERS, FIRE HYDRANTS, AND B-BOXES ARE TO BE ADJUSTED TO MEET FINISHED GRADE. THE CONTRACTOR'S ADJUSTMENT IS TO BE MADE BY THE SEWER AND WATER CONTRACTOR, AND THE COST IS TO BE CONSIDERED INCIDENTAL. THESE ADJUSTMENTS TO FINISHED GRADE WILL NOT ALLEVIATE THE CONTRACTOR FROM ANY ADDITIONAL ADJUSTMENTS AS REQUIRED BY THE MUNICIPALITY UPON FINAL INSPECTION OF THE PROJECT.
30. HYDRANTS SHALL NOT BE FLUSHED DIRECTLY ONTO THE ROAD SUBGRADES. WHENEVER POSSIBLE, HOSES SHALL BE USED TO DIRECT THE WATER INTO LOT AREAS OR THE STORM SEWER SYSTEM, IF AVAILABLE. DAMAGE TO THE ROAD SUBGRADE OR LOT GRADING DUE TO EXCESSIVE WATER SATURATION AND/OR EROSION FROM HYDRANT FLUSHING, OR FROM LEAKS IN THE WATER DISTRIBUTION SYSTEM, WILL BE REPAIRED BY THE CONTRACTOR FLUSHING OR USING THE HYDRANT AT THE CONTRACTOR'S OWN EXPENSE. LEAKS IN THE WATER DISTRIBUTION SYSTEM SHALL BE THE RESPONSIBILITY OF THE WATER MAIN CONTRACTOR AND SHALL BE REPAIRED AT THE CONTRACTOR'S EXPENSE.
31. TRENCH BACKFILL WILL BE REQUIRED TO THE FULL DEPTH ABOVE SEWERS AND WATERMAIN WITHIN TWO (2) FEET HORIZONTAL OF PROPOSED OR EXISTING PAVEMENT.
32. IF SOFT, SPONGY, OR OTHER UNSUITABLE SOILS WITH UNCONFINED COMPRESSIVE STRENGTH LESS THAN 0.5 TSF ARE ENCOUNTERED AT THE BOTTOM OF THE TRENCH, ALL SUCH MATERIAL SHALL BE REMOVED AND REPLACED WITH WELL-COMPACTED, CRUSHED LIMESTONE BEDDING MATERIAL. IF DOCK IS ENCOUNTERED, IT SHALL BE REMOVED TO AT LEAST SIX (6) INCHES BELOW THE BOTTOM OF THE PIPE TO ALLOW PROPER THICKNESS OF BEDDING. ANY UNDERCUTS OF TWO (2) FEET OR LESS SHALL BE CONSIDERED INCIDENTAL TO THE CONTRACT. DEPTHS GREATER THAN TWO (2) FEET SHALL BE SUBMITTED TO THE ENGINEER FOR APPROVAL PRIOR TO PROCEEDING.
33. THE TRENCHES FOR PIPE INSTALLATION SHALL BE KEPT DRY AT ALL TIMES DURING PIPE PLACEMENT. APPROPRIATE FACILITIES TO MAINTAIN THE DRY TRENCH SHALL BE PROVIDED BY THE CONTRACTOR, AND THE COST OF SUCH SHALL BE INCIDENTAL TO THE UNIT PRICE BID FOR THE ITEM. PLANS FOR THE SITE DEWATERING, IF EMPLOYED, SHALL BE SUBMITTED TO AND APPROVED BY THE OWNER PRIOR TO IMPLEMENTATION. NO ADDITIONAL COMPENSATION SHALL BE MADE FOR DEWATERING DURING CONSTRUCTION UNLESS APPROVED IN WRITING BY THE OWNER.
34. AFTER THE STORM SEWER SYSTEM HAS BEEN CONSTRUCTED, THE CONTRACTOR SHALL PLACE PROPER INLET PROTECTION EROSION CONTROL AT LOCATIONS DIRECTED BY THE ENGINEER. THE PURPOSE OF THE INLET PROTECTION WILL BE TO MINIMIZE THE AMOUNT OF SILTATION THAT NORMALLY WOULD ENTER THE STORM SEWER SYSTEM FROM ADJACENT AND/OR UPSTREAM DRAINAGE AREAS.
35. AT THE CLOSE OF EACH WORKING DAY AND AT THE CONCLUSION OF CONSTRUCTION OPERATIONS, ALL DRAINAGE STRUCTURES AND FLOW LINES SHALL BE FREE FROM DIRT AND DEBRIS.
36. EROSION CONTROL MEASURES SHALL BE INSTALLED IN ACCORDANCE WITH IEPA REGULATIONS AND IDOT STANDARDS FOR SOIL EROSION AND SEDIMENTATION CONTROL AND SHALL BE MAINTAINED BY THE CONTRACTOR AND REMAIN IN PLACE UNTIL A SUITABLE GROWTH OF GRASS, ACCEPTABLE TO THE ENGINEER, HAS DEVELOPED.
37. THE CONTRACTOR SHALL CONFORM TO ALL EROSION CONTRL REQUIREMENTS AS SET FORTH BY THE ILLINOIS ENVIRONMENTAL PROTECTION AGENCY THROUGH THE NPDES PHASE II PERMIT PROGRAM REQUIREMENTS AND GOVERNING MUNICIPALITY. THE CONTRACTOR SHALL INSTALL AND MAINTAIN ALL EROSION CONTROL MEASURES AS INDICATED ON THE EROSION CONTROL DRAWINGS AND SPECIFICATIONS AS WELL AS THE STORMWATER POLLUTION PREVENTION PLAN (SWPPP) PREPARED BY KIMLEY-HORN AND ASSOCIATES, INC. THE CONTRACTOR IS RESPONSIBLE FOR IMPLEMENTING THE PROVISIONS INDICATED IN THE SWPPP AT A MINIMUM, INCLUDING EROSION CONTROL MEASURES AND INSPECTION FREQUENCY, AS REQUIRED BY THE IEPA NPDES PHASE II PERMIT PROGRAM REQUIREMENTS. THE CONTRACTOR IS RESPONSIBLE FOR KEEPING ALL SWPPP DOCUMENTATION CURRENT AND, WHEN AVAILABLE, ON THE PROJECT SITE AT ALL TIMES FOR REVIEW BY THE OWNER, ENGINEER, AND REGULATORY AGENCIES. KIMLEY-HORN AND ASSOCIATES, INC. IS NOT RESPONSIBLE FOR THE ACTS OR OMISSIONS OF THE CONTRACTOR, SUBCONTRACTORS OR SUPPLIERS, WHICH CONTRIBUTE TO DEFICIENCIES IN THE SWPPP OR ANY VIOLATIONS RESULTING FROM INADEQUATE EROSION CONTROL PROTECTION AND/OR DOCUMENTATION.
38. THE PAVEMENT SHALL BE KEPT FREE OF MUD AND DEBRIS AT ALL TIMES. IT MAY BE NECESSARY TO KEEP A SWEEPER ON-SITE AT ALL TIMES.
39. ALL DISTURBED AREAS OF THE RIGHT-OF-WAY SHALL BE FULLY RESTORED TO PRE-CONSTRUCTION CONDITIONS WITH A MINIMUM OF SIX (6) INCHES OF TOPSOIL, SEEDING, AND MULCH AS PER IDOT STANDARDS.
40. ALL PROPOSED GRADES SHOWN ON PLANS ARE FINISHED SURFACE ELEVATIONS, UNLESS NOTED OTHERWISE.
41. ALL TESTING SHALL BE THE RESPONSIBILITY AND EXPENSE OF THE CONTRACTOR. IF REQUESTED BY THE MUNICIPALITY OR ENGINEER, COPIES OF ALL TEST RESULTS SHALL BE PROVIDED TO THE ENGINEER FOR REVIEW AND APPROVAL.
42. PROVIDE SMOOTH VERTICAL CURVES THROUGH HIGH AND LOW POINTS INDICATED BY SPOT ELEVATIONS. PROVIDE UNIFORM SLOPES BETWEEN NEW AND EXISTING GRADES. AVOID RIDGES AND DEPRESSIONS.
43. WHEN REQUIRED, THE CONTRACTOR SHALL NOTIFY THE OWNER WHEN RECORD DRAWINGS CAN BE PREPARED. RECORD DRAWINGS SHALL INDICATE THE FINAL LOCATION AND LAYOUT OF ALL IMPROVEMENTS, INCLUDING VERIFICATION OF ALL CONCRETE, PIPES, INVERT, RIM, AND SPOT GRADE ELEVATIONS, AND INCORPORATE ALL FIELD DESIGN CHANGES APPROVED BY THE OWNER.
44. BEFORE ACCEPTANCE, ALL WORK SHALL BE INSPECTED BY THE MUNICIPALITY, AS NECESSARY.

EARTHWORK NOTES

1. GENERAL
   1.1. IT IS THE CONTRACTOR'S RESPONSIBILITY TO UNDERSTAND THE SOIL AND GROUNDWATER CONDITIONS AT THE SITE.
   1.2. ANY QUANTITIES IN THE BID PROPOSAL ARE INTENDED AS A GUIDE FOR THE CONTRACTOR'S USE IN DETERMINING THE SCOPE OF THE COMPLETED PROJECT. IT IS THE CONTRACTOR'S RESPONSIBILITY TO DETERMINE ALL MATERIAL QUANTITIES AND BE KNOWLEDGEABLE OF ALL SITE CONDITIONS.
   1.3. THE CONTRACTOR WILL NOTE THAT THE ELEVATIONS SHOWN ON THE CONSTRUCTION PLANS ARE FINISHED GRADE AND THAT PAVEMENT THICKNESS, TOPSOIL, ETC., MUST BE ACCOUNTED FOR.
   1.4. THE CONTRACTOR SHALL MAINTAIN POSITIVE DRAINAGE DURING CONSTRUCTION AND PREVENT STORMWATER FROM RUNNING INTO OR STANDING IN EXCAVATED AREAS. THE FAILURE TO PROVIDE PROPER DRAINAGE WILL NEGATE ANY POSSIBLE ADDED COMPENSATION REQUESTED DUE TO EXCESS WATER BEING ENCOUNTERED AS A RESULT THEREOF. FINAL GRADES SHALL BE PROTECTED AGAINST DAMAGE FROM EROSION, SEDIMENTATION, AND TRAFFIC.
   1.5. THE CONTRACTOR SHALL BE RESPONSIBLE FOR IMPLEMENTATION OF THE SOIL EROSION AND SEDIMENTATION CONTROL MEASURES. THE INITIAL ESTABLISHMENT OF EROSION CONTROL PROCEDURES ARE THE RESPONSIBILITY OF SILT AND FILTER FENCING, ETC., TO PROTECT ADJACENT PROPERTY, WETLANDS, ETC., SHALL OCCUR BEFORE GRADING BEGINS.
   1.6. PRIOR TO COMMENCEMENT OF GRADING ACTIVITIES, THE CONTRACTOR SHALL ERECT A CONSTRUCTION FENCE AROUND ANY TREE DESIGNATED TO BE PRESERVED. SAID FENCE SHALL BE PLACED IN A CIRCLE CENTERED AROUND THE TREE, THE DIAMETER OF WHICH SHALL BE SUCH THAT THE ENTIRE DRIP ZONE (EXCEPT OF FURTHEST EXTENDING BRANCHES) SHALL BE WITHIN THE FENCE LIMITS. EXISTING GRADE WITHIN THE FENCED AREA SHALL NOT BE DISTURBED.
   1.7. EXISTING SUBSURFACE CONDITIONS WERE OBTAINED FROM A GEOTECHNICAL PREPARED BY:

      N/A

2. TOPSOIL EXCAVATION INCLUDES:
   2.1. EXCAVATION OF TOPSOIL AND OTHER STRUCTURALLY UNSUITABLE MATERIALS WITHIN THOSE AREAS THAT WILL REQUIRE EARTH EXCAVATION OR COMPACTED EARTH FILL MATERIAL. EXISTING VEGETATION SHALL BE REMOVED PRIOR TO STRIPPING TOPSOIL OR FILLING AREAS.
   2.2. PLACEMENT OF EXCAVATED MATERIAL IN OWNER-DESIGNATED AREAS FOR FUTURE USE WITHIN AREAS TO BE LANDSCAPED AND THOSE AREAS NOT REQUIRING STRUCTURAL FILL MATERIAL. PROVIDE NECESSARY EROSION CONTROL MEASURES FOR STOCKPILE.
   2.3. TOPSOIL STOCKPILED FOR RESPREAD SHALL BE FREE OF CLAY AND SHALL NOT CONTAIN ANY OF THE TRANSITIONAL MATERIAL BETWEEN THE TOPSOIL AND CLAY. THE TRANSITIONAL MATERIAL SHALL BE USED IN NON-STRUCTURAL FILL AREAS OR DISPOSED OF OFF-SITE.
   2.4. TOPSOIL RESPREAD SHALL INCLUDE HAULING AND SPREADING SIX (6) INCHES OF TOPSOIL DIRECTLY OVER AREAS TO BE LANDSCAPED WHERE SHOWN ON THE PLANS OR AS DIRECTED BY THE OWNER.
   2.5. MODERATE COMPACTION IS REQUIRED IN NON-STRUCTURAL FILL AREAS.
3. EARTH EXCAVATION INCLUDES:
   3.1. EXCAVATION OF SUBSURFACE MATERIALS WHICH ARE SUITABLE FOR USE AS STRUCTURAL FILL. THE EXCAVATION SHALL BE TO WITHIN A TOLERANCE OF 0.1 FEET OF THE PLAN SUBGRADE ELEVATIONS WHILE MAINTAINING PROPER DRAINAGE. THE TOLERANCE WITHIN PAVEMENT AREAS SHALL BE SUCH THAT THE EARTH MATERIALS SHALL "BALANCE" DURING THE FINE GRADING OPERATION.
   3.2. PLACEMENT OF SUITABLE MATERIALS SHALL BE WITHIN THOSE AREAS REQUIRING STRUCTURAL FILL IN ORDER TO ACHIEVE THE PLAN SUBGRADE ELEVATIONS TO WITHIN A TOLERANCE OF 0.1 FEET. THE FILL MATERIALS SHALL BE PLACED IN LOOSE LIFTS THAT SHALL NOT EXCEED EIGHT (8) INCHES IN THICKNESS, AND THE WATER CONTENT SHALL BE ADJUSTED IN ORDER TO ACHIEVE REQUIRED COMPACTION.
   3.3. STRUCTURAL FILL MATERIAL MAY BE PLACED WITHIN THOSE PORTIONS OF THE SITE NOT REQUIRING STRUCTURAL FILL, WITHIN SIX (6) INCHES OF THE PLAN FINISHED GRADE ELEVATION. IN AREAS REQUIRING STRUCTURAL FILL, HOWEVER, THIS MATERIAL SHALL NOT BE PLACED OVER TOPSOIL OR OTHER UNSUITABLE MATERIALS UNLESS SPECIFICALLY DIRECTED BY A SOILS ENGINEER WITH THE CONCURRENCE OF THE OWNER.
   3.4. COMPACTION OF SUITABLE MATERIALS SHALL BE TO AT LEAST 93% OF THE MODIFIED PROCTOR DRY DENSITY WITHIN PROPOSED PAVEMENT AREAS, SIDEWALK, ETC. COMPACTION SHALL BE AT LEAST 95% OF THE MODIFIED PROCTOR WITHIN PROPOSED BUILDING PAD AREAS.
4. UNSUITABLE MATERIAL: UNSUITABLE MATERIALS SHALL BE CONSIDERED MATERIAL THAT IS NOT SUITABLE FOR THE SUPPORT OF PAVEMENT AND BUILDING CONSTRUCTION, AND IS ENCOUNTERED BELOW NORMAL TOPSOIL DEPTHS AND THE PROPOSED SUBGRADE ELEVATIONS. THE DECISION TO REMOVE SAID MATERIAL AND TO WHAT EXTENT SHALL BE MADE BY THE ENGINEER WITH THE CONCURRENCE OF THE OWNER.
5. MISCELLANEOUS. THE CONTRACTOR SHALL:
   5.1. SPREAD AND COMPACT UNIFORMLY TO THE DEGREE SPECIFIED ALL EXCESS TRENCH SPOIL AFTER COMPLETION OF THE UNDERGROUND IMPROVEMENTS.
   5.2. SCARIFY, DISC, AERATE, AND COMPACT, TO THE DEGREE SPECIFIED, THE UPPER TWELVE (12) INCHES OF THE SUITABLE SUBGRADE MATERIAL IN ALL AREAS THAT MAY BE SOFT DUE TO EXCESS MOISTURE CONTENT. THIS APPLIES TO CUT AREAS AS WELL AS FILL AREAS.
   5.3. ADD WATER TO DRY MATERIAL IN ORDER TO ADJUST THE MOISTURE CONTENT FOR THE PURPOSE OF ACHIEVING THE SPECIFIED COMPACTION.
   5.4. BACKFILL THE CURB AND GUTTER AFTER ITS CONSTRUCTION AND PRIOR TO THE PLACEMENT OF THE BASE COURSE MATERIAL.
6. TESTING AND FINAL ACCEPTANCE
   6.1. THE CONTRACTOR SHALL PROVIDE AS A MINIMUM A FULLY LOADED SIX-WHEEL TANDEM AXLE TRUCK FOR PROOF ROLLING THE PAVEMENT SUBGRADE PRIOR TO THE PLACEMENT OF THE CURB AND GUTTER AND THE BASE MATERIAL. THIS SHALL BE WITNESSED BY THE TESTING ENGINEER AND THE OWNER. (SEE PAVING SPECIFICATION.)
   6.2. ANY UNSUITABLE AREA ENCOUNTERED AS A RESULT OF PROOF ROLLING SHALL BE REMOVED AND REPLACED WITH SUITABLE MATERIAL OR OTHERWISE CORRECTED AND APPROVED BY THE ENGINEER.

PAVING NOTES

1. GENERAL
   1.1. PAVING WORK INCLUDES FINAL SUBGRADE SHAPING, PREPARATION, AND COMPACTION; PLACEMENT OF SUBBASE OR BASE COURSE MATERIALS; BITUMINOUS BINDER AND/OR SURFACE COURSES; FORMING, FINISHING, AND CURING CONCRETE PAVEMENT, CURBS, AND WALKS; AND FINAL CLEAN-UP AND ALL RELATED WORK.
   1.2. COMPACTION REQUIREMENTS [REFERENCE ASTM D-1557 (MODIFIED PROCTOR)] FOR SUBGRADE, SUBBASE, AGGREGATE BASE COURSE, AND BITUMINOUS COURSES SHALL MEET ILLINOIS DEPARTMENT OF TRANSPORTATION (IDOT) HIGHWAY STANDARDS.
   1.3. IT SHALL BE THE CONTRACTOR'S SOLE RESPONSIBILITY TO PROVIDE PROPER BARRICADING WARNING DEVICES, AND THE SAFE MANAGEMENT OF TRAFFIC WITHIN THE AREA OF CONSTRUCTION. ALL TRAFFIC DEVICES AND THEIR INSTALLATION SHALL CONFORM TO THE MANUAL OF UNIFORM TRAFFIC CONTROL DEVICES (MUTCD), LATEST EDITION, AND IN ACCORDANCE WITH THE MUNICIPALITY CODE.
2. SUBGRADE PREPARATION
   2.1. EARTHWORK FOR PROPOSED PAVEMENT SUBGRADE SHALL BE FINISHED TO WITHIN 0.1 FOOT, PLUS OR MINUS, OF PLAN ELEVATION. THE CONTRACTOR SHALL CONFIRM THAT THE SUBGRADE HAS BEEN PROPER

BOUNDARY AND TOPOGRAPHIC SURVEY

LEGAL DESCRIPTION

LOTS 15, 16 AND 17 (EXCEPT THE WESTERLY 17.0 FEET THEREOF) AND LOT 18 (EXCEPT THE WESTERLY 17.0 FEET AND EXCEPT THE NORTHERLY 17.0 FEET THEREOF) IN BLOCK 4 IN PARK ADDITION TO NAPERVILLE, BEING A SUBDIVISION OF PART OF THE SOUTHEAST QUARTER OF SECTION 12 AND THE NORTHEAST QUARTER OF SECTION 13, TOWNSHIP 38 NORTH, RANGE 9 EAST OF THE THIRD PRINCIPAL MERIDIAN AND PART OF THE SOUTHWEST QUARTER OF SECTION 7 AND THE NORTHWEST QUARTER OF SECTION 18, TOWNSHIP 38 NORTH, RANGE 10 EAST OF THE THIRD PRINCIPAL MERIDIAN, ACCORDING TO THE PLAT THEREOF RECORDED JULY 26, 1873 AS DOCUMENT 16618, IN DUPAGE COUNTY, ILLINOIS.

NOTES

1. THE LEGAL DESCRIPTION FOR THIS SURVEY WAS PROVIDED BY THE CLIENT.
2. THE BASIS OF BEARINGS FOR THIS SURVEY IS THE ILLINOIS STATE PLANE COORDINATE SYSTEM, NAD 83 (2011), ZONE 1201 (ILLINOIS EAST).
3. BUILDING LINES AND EASEMENTS SHOWN HEREON ARE BASED ON RECORDED SUBDIVISION PLATS OBTAINED BY THE SURVEYOR. THIS SURVEY DOES NOT DEPICT ADDITIONAL EASEMENTS OR RESTRICTIONS WHICH WOULD BE DISCLOSED BY A TITLE POLICY FOR THE SITE.
4. THE SURVEYOR CONTACTED J.U.L.I.E. FOR A DESIGN STAGE REQUEST FOR THIS SITE WHICH WAS ASSIGNED A DIG NUMBER OF #A241142839. INQUIRIES WERE SENT OUT TO THE VARIOUS UTILITY COMPANIES REQUESTING MAPS AND/OR ATLASES OF THEIR RESPECTIVE FACILITIES. THE INFORMATION RECEIVED TO DATE IS SHOWN HEREON. ALSO, PRIOR TO FIELD WORK ON THIS SITE, THE UNDERGROUND DETECTIVE PROVIDED UTILITY LOCATING SERVICES ON SITE AND THE INFORMATION OBTAINED BY THE SURVEYOR FROM THESE MARKS ARE SHOWN HEREON.
5. THE UNDERGROUND UTILITIES SHOWN HAVE BEEN LOCATED FROM OBSERVED FIELD EVIDENCE AND EXISTING DRAWINGS, MAPS AND RECORDS SUPPLIED TO SURVEYOR. THE SURVEYOR MAKES NO GUARANTEES THAT THE UNDERGROUND UTILITIES SHOWN COMPRISE ALL SUCH UTILITIES IN THE AREA, EITHER IN SERVICE OR ABANDONED. THE SURVEYOR FURTHER DOES NOT WARRANT THAT THE UNDERGROUND UTILITIES SHOWN ARE IN THE EXACT LOCATION INDICATED, ALTHOUGH THEY ARE LOCATED AS ACCURATELY AS POSSIBLE FROM AVAILABLE INFORMATION. THE SURVEYOR HAS PHYSICALLY LOCATED OBSERVED STRUCTURES AND MARKINGS; HOWEVER, HE HAS NOT PHYSICALLY LOCATED THE UNDERGROUND LINES.

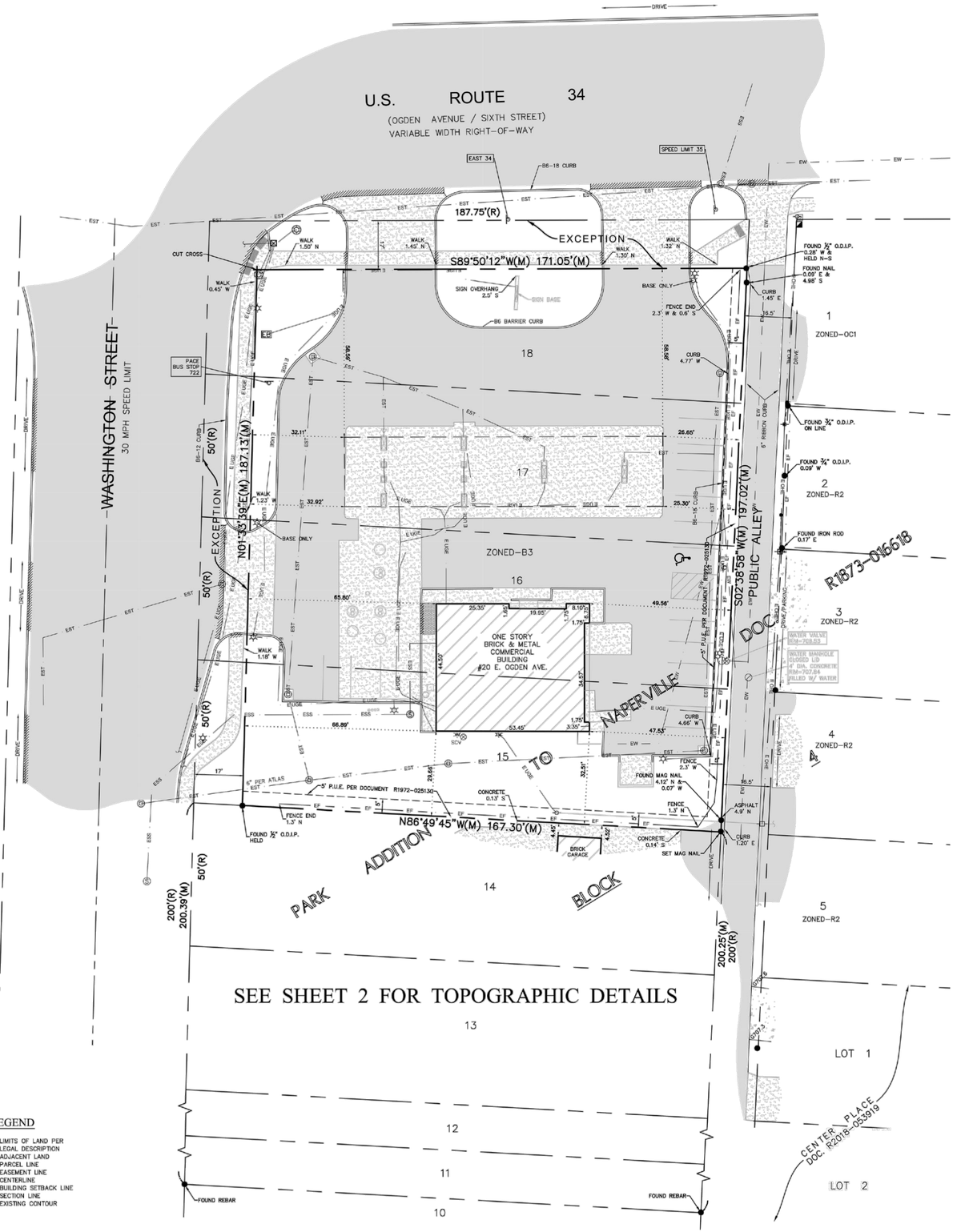

GRAPHIC SCALE

20 0 10 20 40 80

(IN FEET)
1 inch = 20 ft.

GRID NORTH

ZONING INFORMATION

THE FOLLOWING INFORMATION IS FROM THE CITY OF NAPERVILLE ON-LINE CODE OF ORDINANCES AS INTERPRETED BY THE SURVEYOR. CONSULT THE CITY OF NAPERVILLE ZONING DEPARTMENT FOR THE MOST UP-TO-DATE INFORMATION. A SITE PLAN MAY BE REQUIRED.

ZONING: B-3, GENERAL COMMERCIAL DISTRICT

SETBACKS:
FRONT: WHERE THE EXTENSION OF A FRONT OR SIDE LOT LINE COINSIDES WITH A FRONT LOT LINE OF AN ABUTTING LOT LOCATED IN A RESIDENCE DISTRICT OR IS ACROSS AN EXISTING OR PROPOSED RIGHT-OF-WAY FROM PROPERTY LOCATED IN A RESIDENCE DISTRICT, A YARD EQUAL IN DEPTH TO THE MINIMUM FRONT YARD REQUUIRED SHALL BE PROVIDED.

FUEL DISPENSING DEVICES SHALL BE EXEMPT FROM THE ESTABLISHED FRONT YARD OR CORNER SIDE YARD REQUIREMENTS, BUT ALL SUCH DISPENSING DEVICES SHALL BE SET BACK FROM THE FRONT LOT LINE AND THE CORNER SIDE LOT LINE A DISTANCE OF NOT LESS THAN 15'.

SIDE: ABUTTING R2 DISTRICT: 12' (WHEN ACROSS AN EXISTING OR PROPOSED RIGHT-OF-WAY, MEASURE FROM THE EDGE OF EXISTING OR PROPOSED RIGHT-OF-WAY).

REAR: ABUTTING R2 DISTRICT: 12' (WHEN ACROSS AN EXISTING OR PROPOSED RIGHT-OF-WAY, MEASURE FROM THE EDGE OF EXISTING OR PROPOSED RIGHT-OF-WAY)

THE MAXIMUM FLOOR AREA RATIO FOR ALL BUILDINGS AND STRUCTURES IN THE B3 DISTRICT SHALL BE 0.325.

OFF-STREET PARKING REQUIREMENTS: AUTOMOBILE SERVICE STATION & REPAIR FACILITY = 4.5 SPACES FOR EVERY 1,000 SQUARE FEET OF GROSS FLOOR AREA;

SERVICE STATION STACKING = 2 STACKING SPACES PLUS 1 SPACE FOR EACH VEHICLE THAT CAN BE SERVICED AT A PUMP;

AUTOMATIC CAR WASH STACKING = 10 STACKING SPACES ENTERING CAR WASH, 2 STACKING SPACES EXITING CAR WASH

SIGNAGE:
SETBACK: WHEN FRONTING A MAJOR ARTERIAL: TEN (10) FEET FROM THE FRONT PROPERTY LINE

LEGEND

- FOUND 7/8" O.D.I.P. UNLESS OTHERWISE NOTED (HELD LOCATION)
- CONCRETE MONUMENT
- CROSS IN CONCRETE
- MANHOLE
- STORM STRUCTURE
- SANITARY MANHOLE
- CLEANOUT
- FLARED END SECTION
- TRANSFORMER PAD
- ELECTRIC MANHOLE
- ELECTRIC BOX
- ELECTRIC PEDESTAL
- ELECTRIC MARKER
- ELECTRIC METER
- UTILITY POLE
- UTILITY POLE W/LIGHT
- UTILITY POLE W/TSF
- GUY POLE
- OVERHEAD TRAFFIC SIGNAL
- TRAFFIC SIGNAL MANHOLE
- LIGHT
- LIGHT POLE
- HAND HOLE
- VALVE VAULT
- FIRE HYDRANT
- IRRIGATION CONTROL VALVE
- POST INDICATOR VALVE
- SIAMESE WATER CONNECTION
- WATER MARKER
- WATER METER
- VALVE BOX
- B/BOX
- TELEPHONE MANHOLE
- TELEPHONE NETWORK INTERFACE
- TELEPHONE MARKER
- TELEPHONE PEDESTAL
- CABLE TELEVISION PEDESTAL
- GAS METER
- GAS VALVE
- GAS MARKER
- DOWN SPOUT
- BORING HOLE
- MONITORING WELL
- GATE POST
- BOLLARD POLE
- SIGN
- FLAG POLE
- MAILBOX
- SANITARY SEWER
- STORM SEWER
- WATER MAIN
- GAS MAIN
- ELECTRIC LINE
- OVERHEAD WIRES
- CABLE TV LINE
- OVERHEAD ELECTRIC WIRES
- OVERHEAD TV WIRES
- TELEPHONE LINE
- FIBER OPTIC LINE
- CONIFEROUS TREE W/APPROX. DIAMETER
- DECIDUOUS TREE W/APPROX. DIAMETER MS=MULTI-STEM (DRIP LINE SHOWN IS APPROXIMATE)
- + ELEVATION
- BITUMINOUS PAVEMENT
- CONCRETE SURFACE
- DEPRESSED CURB
- GRAVEL SURFACE
- LANDSCAPE AREA
- STONE SURFACE
- DETECTABLE TACTILE WARNING SURFACE
- CHAIN LINK FENCE
- METAL GUARDRAIL
- OVERHEAD TRAFFIC ARM

ABBREVIATIONS

O.D.I.P. = OUTSIDE DIAMETER IRON PIPE
TF = TOP OF FOUNDATION
FF = FINISHED FLOOR
FES = FLARED END SECTION
VCP = VITRIFIED CLAY PIPE
DIP = DUCTILE IRON PIPE
PVC = POLYVINYL CHLORIDE
RCP = REINFORCED CONCRETE PIPE
CMP = CORRUGATED METAL PIPE
(R) = RECORD BEARING OR DISTANCE
(M) = MEASURED BEARING OR DISTANCE
(C) = CALCULATED BEARING OR DISTANCE
(D) = DEED BEARING OR DISTANCE
N = NORTH
S = SOUTH
E = EAST
W = WEST
A = ARC LENGTH
R = RADIUS
CH = CHORD
CB = CHORD BEARING
B.S.L. = BUILDING SETBACK LINE
U.E. = UTILITY EASEMENT
D.E. = DRAINAGE EASEMENT
P.U.E. = PUBLIC UTILITY EASEMENT
P.O.C. = POINT OF COMMENCEMENT
P.O.B. = POINT OF BEGINNING
P.U. & D.E. = PUBLIC UTILITY AND DRAINAGE EASEMENT
BC = BACK OF CURB
BOC = BACK OF DEPRESSED
FL = FLOW LINE
C = CONCRETE
P = PAVEMENT
G = GRAVEL
EW = EDGE OF WALK
TW = TOP OF WALL
TP = TOP OF PIPE
IE = INVERT ELEVATION
PL = PROPERTY LINE
DS = DOWN SPOUT
S.F. = SQUARE FEET
SL = SHORE LINE
TSF = TRANSFORMER
B = PAVERS

LINE LEGEND

- LIMITS OF LAND PER LEGAL DESCRIPTION
- ADJACENT LAND PARCEL LINE
- EASEMENT LINE
- CENTERLINE
- BUILDING SETBACK LINE
- SECTION LINE
- EXISTING CONTOUR

SURVEYOR'S CERTIFICATION

STATE OF ILLINOIS)
COUNTY OF KANE) SS

THE ABOVE DESCRIBED PROPERTY WAS SURVEYED UNDER THE DIRECTION OF AN ILLINOIS PROFESSIONAL LAND SURVEYOR ON 5/2/2024. ALL DISTANCES SHOWN ARE IN FEET AND DECIMAL PARTS THEREOF.

THIS PROFESSIONAL SERVICE CONFORMS TO THE CURRENT ILLINOIS MINIMUM STANDARDS FOR A BOUNDARY SURVEY.

THIS PROFESSIONAL SERVICE CONFORMS TO THE CURRENT ILLINOIS MINIMUM STANDARDS FOR A TOPOGRAPHIC SURVEY OR TOPOGRAPHIC MAP.

COMPASS SURVEYING LTD
PROFESSIONAL DESIGN FIRM
LAND SURVEYOR CORPORATION NO. 184-002778
LICENSE EXPIRES 4/30/2025

BY: _____ DATE: 5/6/2024
SCOTT C. KREBS
ILLINOIS PROFESSIONAL LAND SURVEYOR NO. 3509
LICENSE EXPIRES 11/30/24

SCOTT C. KREBS 35-3509 AURORA, ILLINOIS PROFESSIONAL LAND SURVEYOR STATE OF ILLINOIS

J:\PSDATA\2024 PROJECTS\24.0115\24.0115 BNDY TOPO CASEYLAYERS.DWG

NO.	DATE: 5/6/24	PC DP	DRAWN BY BT/MRA	CHECKED BY SK	BOOK 414 PG 34
			REVISIONS		BY
1			ADDITIONAL UTILITY INFORMATION		DATE 6/12/24 MRA

CLIENT

Kimley»Horn
© 2022 KIMLEY-HORN AND ASSOCIATES, INC.
570 LAKE COOK ROAD, SUITE 200
DEERFIELD, IL 60015
WWW.KIMLEY-HORN.COM

PROJECT
20 E. OGDEN AVENUE
NAPERVILLE, IL

ALTA SURVEY

COMPASS SURVEYING LTD
ALTA SURVEYS • TOPOGRAPHY • CONSTRUCTION STAKING
2631 GINGER WOODS PARKWAY, STE. 100
AURORA, IL 60502
PHONE: (630) 820-9100 FAX: (630) 820-7030 EMAIL: ADMIN@CLSURVEYING.COM

SCALE: 1" = 20'

C-003

PROJ. NO. 24.0115

J:\Psdata\2024 Projects\24.0115\24.0115 Bndy Topo CaseyLayers.dwg, 6/12/2024 1:19:32 PM

BOUNDARY AND TOPOGRAPHIC SURVEY

GRAPHIC SCALE

20 0 10 20 40 80

(IN FEET)
1 inch = 20 ft.

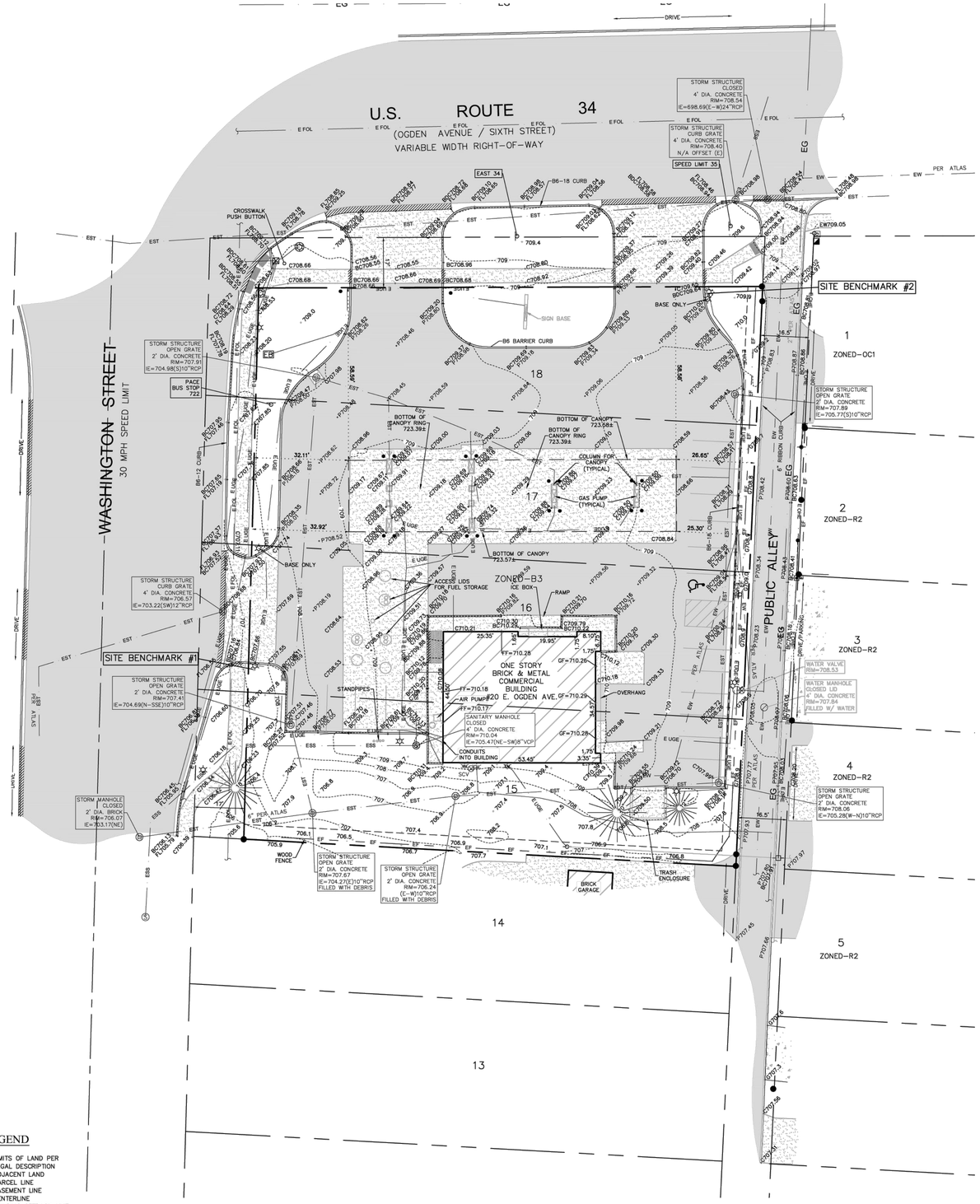

LEGEND

- FOUND 7/8" O.D.I.P. UNLESS OTHERWISE NOTED (FIELD LOCATION)
- CONCRETE MONUMENT
- CROSS IN CONCRETE
- MANHOLE
- STORM STRUCTURE
- SANITARY MANHOLE
- CLEANOUT
- FLARED END SECTION
- TRANSFORMER PAD
- ELECTRIC MANHOLE
- ELECTRIC BOX
- ELECTRIC PEDESTAL
- ELECTRIC MARKER
- ELECTRIC METER
- UTILITY POLE
- UTILITY POLE W/LIGHT
- UTILITY POLE W/TSF
- GUY POLE
- OVERHEAD TRAFFIC SIGNAL
- TRAFFIC SIGNAL MANHOLE
- LIGHT
- LIGHT POLE
- HAND HOLE
- VALVE VAULT
- FIRE HYDRANT
- IRRIGATION CONTROL VALVE
- POST INDICATOR VALVE
- SIAMESE WATER CONNECTION
- WATER MARKER
- WATER METER
- VALVE BOX
- B/BOX
- TELEPHONE MANHOLE
- TELEPHONE NETWORK INTERFACE
- TELEPHONE MARKER
- TELEPHONE PEDESTAL
- CABLE TELEVISION PEDESTAL
- GAS METER
- GAS VALVE
- GAS MARKER
- DOWN SPOUT
- BORING HOLE
- MONITORING WELL
- GATE POST
- BOLLARD POLE
- SIGN
- FLAG POLE
- MAILBOX
- SANITARY SEWER
- STORM SEWER
- WATER MAIN
- GAS MAIN
- ELECTRIC LINE
- OVERHEAD WIRES
- CABLE TV LINE
- OVERHEAD ELECTRIC WIRES
- OVERHEAD TV WIRES
- TELEPHONE LINE
- FIBER OPTIC LINE
- CONIFEROUS TREE W/APPROX. DIAMETER
- DECIDUOUS TREE W/APPROX. DIAMETER MS=MULTI-STEM (DRIP LINE SHOWN IS APPROXIMATE)
- +ELEVATION
- BITUMINOUS PAVEMENT
- CONCRETE SURFACE
- DEPRESSED CURB
- GRAVEL SURFACE
- LANDSCAPE AREA
- STONE SURFACE
- DETECTABLE TACTILE WARNING SURFACE
- CHAIN LINK FENCE
- METAL GUARDRAIL
- OVERHEAD TRAFFIC ARM

ABBREVIATIONS

O.D.I.P. = OUTSIDE DIAMETER IRON PIPE
TF = TOP OF FOUNDATION
FF = FINISHED FLOOR
FES = FLARED END SECTION
VCP = VITRIFIED CLAY PIPE
DIP = DUCTILE IRON PIPE
PVC = POLYVINYL CHLORIDE
RCP = REINFORCED CONCRETE PIPE
CMP = CORRUGATED METAL PIPE
(R) = RECORD BEARING OR DISTANCE
(M) = MEASURED BEARING OR DISTANCE
(C) = CALCULATED BEARING OR DISTANCE
(D) = DEED BEARING OR DISTANCE
N = NORTH
S = SOUTH
E = EAST
W = WEST
A = ARC LENGTH
R = RADIUS
CH = CHORD
CB = CHORD BEARING
B.S.L. = BUILDING SETBACK LINE
U.E. = UTILITY EASEMENT
D.E. = DRAINAGE EASEMENT
P.U.E. = PUBLIC UTILITY EASEMENT
P.O.C. = POINT OF COMMENCEMENT
P.O.B. = POINT OF BEGINNING
P.U. & D.E. = PUBLIC UTILITY AND DRAINAGE EASEMENT
BC = BACK OF CURB
BDC = BACK OF DEPRESSED
FL = FLOW LINE
C = CONCRETE
P = PAVEMENT
G = GRAVEL
EW = EDGE OF WALL
TW = TOP OF WALL
TP = TOP OF PIPE
IE = INVERT ELEVATION
PL = PROPERTY LINE
DS = DOWN SPOUT
S.F. = SQUARE FEET
SL = SHORE LINE
TSF = TRANSFORMER
B = PAVERS

LINE LEGEND

- LIMITS OF LAND PER LEGAL DESCRIPTION
- ADJACENT LAND PARCEL LINE
- EASEMENT LINE
- CENTERLINE
- BUILDING SETBACK LINE
- SECTION LINE
- EXISTING CONTOUR

BENCHMARKS

REFERENCE BENCHMARK:
CITY OF NAPERVILLE SURVEY MONUMENT 1506

LOCATED BETWEEN 5TH AND 6TH AVENUE ON WEST SIDE OF MILL STREET.

DATUM: NAVD88
ELEVATION = 690.61

SITE BENCHMARKS:

SITE BENCHMARK #1
SQUARE CUT ON NORTH SIDE OF LIGHT POLE BASE SOUTH OF THE SOUTH ENTRANCE ALONG WASHINGTON AVENUE

ELEVATION = 707.82

SITE BENCHMARK #2
SQUARE CUT ON WEST SIDE OF LIGHT POLE BASE EAST OF THE EAST ENTRANCE ALONG OGDEN AVENUE

ELEVATION = 710.27

\PSDATA\2024 PROJECTS\24.0115\24.0115 BNDY TOPO CASEYLAYERS.DWG

BOOK 414 PG 34
CHECKED BY SK
DRAWN BY BT/MRA
PC DP
DATE 5/6/24

NO.	REVISIONS / ADDITIONAL UTILITY INFORMATION	DATE	BY
1		6/12/24	MRA

CLIENT

Kimley»Horn

© 2022 KIMLEY-HORN AND ASSOCIATES, INC.
570 LAKE COOK ROAD, SUITE 200
DEERFIELD, IL 60015
WWW.KIMLEY-HORN.COM

PROJECT

20 E. OGDEN AVENUE
NAPERVILLE, IL

TOPOGRAPHIC SURVEY

COMPASS SURVEYING LTD
ALTA SURVEYS • TOPOGRAPHY • CONSTRUCTION STAKING
2631 GINGER WOODS PARKWAY, STE. 100
AURORA, IL 60502
PHONE: (630) 820-9100 FAX: (630) 820-7050 EMAIL: ADMIN@CLSURVEYING.COM

SCALE: 1" = 20'

C-004

PROJ. NO.: 24.0115

J:\Psdata\2024 Projects\24.0115\24.0115 Bndy Topo CaseyLayers.dwg, 6/12/2024 1:19:35 PM

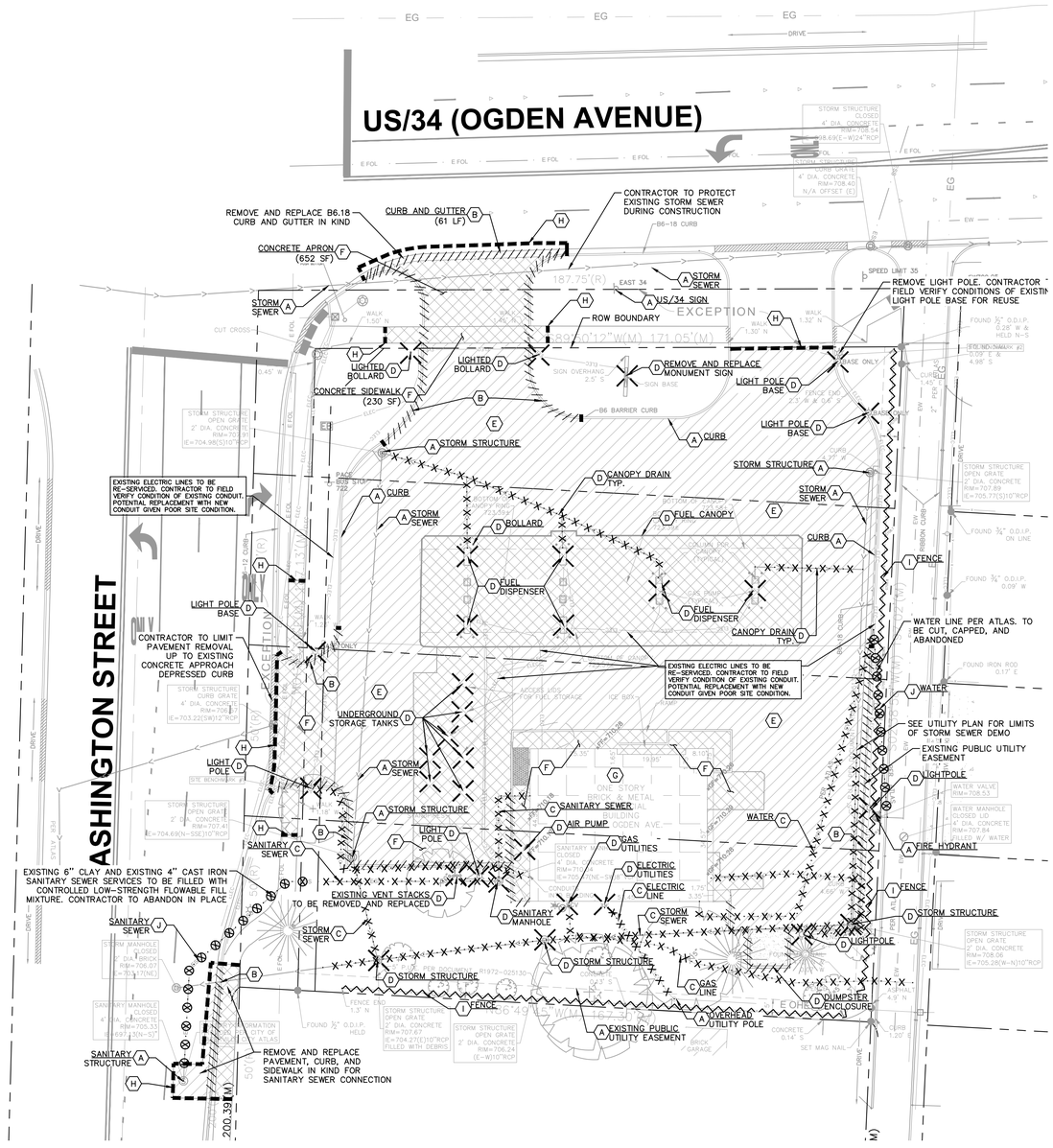

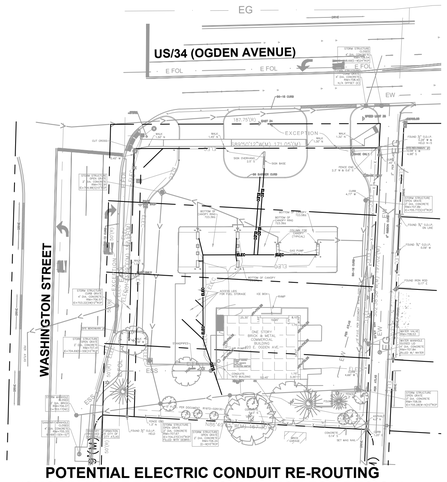

POTENTIAL ELECTRIC CONDUIT RE-ROUTING
(SHOWN FOR REFERENCE ONLY - NOT FOR DESIGN)
1" = 50'

NORTH

GRAPHIC SCALE IN FEET
0 10 20 40

Call Before You Dig
JULIE
1-800-892-0123

WARNING: CONTRACTOR TO VERIFY PRESENCE AND EXACT LOCATION OF ALL UTILITIES PRIOR TO CONSTRUCTION.

SEE SHEET C-100A TREE PRESERVATION PLAN FOR DETAILS ON TREE REMOVALS.

DEMOLITION NOTES

1. CONTRACTOR SHALL BE RESPONSIBLE FOR REMOVAL OF THE EXISTING STRUCTURES, RELATED UTILITIES, PAVING, AND ANY OTHER EXISTING IMPROVEMENTS AS NOTED.
2. CONTRACTOR IS TO REMOVE AND DISPOSE OF ALL DEBRIS, RUBBISH AND OTHER MATERIALS RESULTING FROM PREVIOUS AND CURRENT DEMOLITION OPERATIONS. DISPOSAL WILL BE IN ACCORDANCE WITH ALL LOCAL, STATE AND/OR FEDERAL REGULATIONS GOVERNING SUCH OPERATIONS.
3. THE GENERAL CONTRACTOR SHALL TAKE ALL PRECAUTIONS NECESSARY TO AVOID PROPERTY DAMAGE TO ADJACENT PROPERTIES DURING THE CONSTRUCTION PHASES OF THIS PROJECT. THE CONTRACTOR WILL BE HELD SOLELY RESPONSIBLE FOR ANY DAMAGES TO THE ADJACENT PROPERTIES OCCURRING DURING THE CONSTRUCTION PHASES OF THIS PROJECT. CONTRACTOR SHALL NOT DEMOLISH ANYTHING OUTSIDE THE OWNERS LEASE/PROPERTY LINE UNLESS SPECIFICALLY MENTIONED ON THIS SHEET.
4. THE CONTRACTOR IS SPECIFICALLY CAUTIONED THAT THE LOCATION AND/OR ELEVATION OF EXISTING UTILITIES AS SHOWN ON THESE PLANS IS BASED ON RECORDS OF THE VARIOUS UTILITY COMPANIES, AND WHERE POSSIBLE, MEASUREMENTS TAKEN IN THE FIELD. THE INFORMATION IS NOT TO BE RELIED UPON AS BEING EXACT OR COMPLETE. THE CONTRACTOR MUST CALL THE APPROPRIATE UTILITY COMPANY AT LEAST 72 HOURS BEFORE ANY EXCAVATION TO REQUEST EXACT FIELD LOCATION OF UTILITIES.
5. IF DEMOLITION OR CONSTRUCTION ON SITE WILL INTERFERE WITH THE ADJACENT PROPERTY OWNER'S TRAFFIC FLOW, THE CONTRACTOR SHALL COORDINATE WITH ADJACENT PROPERTY OWNER, TO MINIMIZE THE IMPACT ON TRAFFIC FLOW. TEMPORARY RE-ROUTING OF TRAFFIC IS TO BE ACCOMPLISHED BY USING IDOT APPROVED TRAFFIC BARRICADES, BARRELS, AND/OR CONES. TEMPORARY SIGNAGE AND FLAGMEN MAY BE ALSO NECESSARY.
6. QUANTITIES DEPICTED ON THIS SHEET SHALL SERVE AS A GUIDE ONLY. CONTRACTOR TO VERIFY ALL DEMOLITION QUANTITIES.
7. REFER TO GEOTECHNICAL REPORT PROVIDED BY OTHERS FOR ALL SUBSURFACE INFORMATION.
8. CONTRACTOR SHALL BEGIN CONSTRUCTION OF ANY LIGHT POLE BASES FOR RELOCATED LIGHT FIXTURES AND RELOCATION OF ELECTRICAL SYSTEM AS SOON AS DEMOLITION BEGINS. CONTRACTOR SHALL BE AWARE THAT INTERRUPTION OF POWER TO ANY LIGHT POLES OR SIGNS SHALL NOT EXCEED 24 HOURS.
9. EROSION CONTROL MUST BE ESTABLISHED PRIOR TO ANY WORK ON SITE INCLUDING DEMOLITION.
10. THE EXTENT OF SITE DEMOLITION WORK IS AS SHOWN ON THE CONTRACT DOCUMENTS AND AS SPECIFIED HEREIN.
11. CONTRACTOR MUST RECEIVE APPROVAL FROM CIVIL ENGINEER AND GEOTECHNICAL ENGINEER FOR THE MATERIAL TYPE AND USE IF CONTRACTOR DESIRES TO REUSE DEMOLISHED SITE PAVEMENT AS STRUCTURAL FILL.
12. EXISTING UTILITIES, WHICH DO NOT SERVICE STRUCTURES BEING DEMOLISHED, ARE TO BE KEPT IN SERVICE AND PROTECTED AGAINST DAMAGE DURING DEMOLITION OPERATIONS. CONTRACTOR SHALL ARRANGE FOR SHUT-OFF OF UTILITIES SERVING STRUCTURES TO BE DEMOLISHED. CONTRACTOR IS RESPONSIBLE FOR TURNING OFF, DISCONNECTING, AND SEALING INDICATED UTILITIES BEFORE STARTING DEMOLITION OPERATIONS. EXISTING UTILITIES TO BE ABANDONED ARE TO BE CAPPED AT BOTH ENDS AND FILLED WITH FA-1 OR APPROVED EQUAL. ALL UNDERGROUND UTILITIES TO BE REMOVED ARE TO BE BACKFILLED WITH ENGINEERED FILL OR SELECT EXCAVATED MATERIAL, AS APPROVED BY THE GEOTECHNICAL ENGINEER, TO 95% OF MODIFIED PROCTOR DENSITY WITHIN PAVED AREAS AND TO 90% OF MODIFIED PROCTOR DENSITY FOR GREEN SPACE AREAS, IN ACCORDANCE WITH THE EARTHWORK SPECIFICATIONS. ALL PRIVATE UTILITIES (ELECTRIC, CABLE, TELEPHONE, FIBER OPTIC, GAS) SHALL BE REMOVED AND RELOCATED PER THE UTILITY OWNER AND THE LOCAL MUNICIPALITY'S REQUIREMENTS.
13. UNDERGROUND UTILITIES SHOWN ARE BASED ON ATLASES AND AVAILABLE INFORMATION PRESENTED AT THE TIME OF SURVEY. CONTRACTOR SHOULD CALL 'JULIE' (1-800-892-0123) TO COORDINATE FIELD LOCATIONS OF EXISTING UNDERGROUND UTILITIES BEFORE ORDERING MATERIALS OR COMMENCING CONSTRUCTION. NOTIFY ENGINEER OF ANY DISCREPANCIES IMMEDIATELY. CONTRACTOR SHALL LOCATE AND PROTECT EXISTING UNDERGROUND AND OVERHEAD UTILITIES DURING CONSTRUCTION. UTILITY PROTECTION SHALL BE COORDINATED WITH THE RESPECTIVE UTILITY OWNER AND AS DIRECTED BY THE GOVERNING MUNICIPALITY. DAMAGED CABLES/CONDUITS SHALL BE REPLACED IMMEDIATELY. ALL EXISTING STRUCTURES TO REMAIN SHALL BE PROTECTED THROUGHOUT THE CONSTRUCTION PROCESS. ALL DAMAGED STRUCTURES SHALL BE REPLACED IN-KIND AND THEIR REPLACEMENT COST SHALL BE CONSIDERED INCIDENTAL TO THE CONTRACT. PROPER NOTIFICATION TO THE OWNERS OF THE EXISTING UTILITIES SHALL BE MADE AT LEAST 48 HOURS BEFORE CONSTRUCTION COMMENCES.
14. USE WATER SPRINKLING, TEMPORARY ENCLOSURES, AND OTHER SUITABLE METHODS TO LIMIT DUST AND DIRT RISING AND SCATTERING IN THE AIR TO THE LOWEST LEVEL. COMPLY WITH ALL GOVERNING REGULATIONS PERTAINING TO ENVIRONMENTAL PROTECTION. SEE EROSION CONTROL SHEETS FOR FURTHER EROSION CONTROL REQUIREMENTS.
15. COMPLETELY FILL BELOW-GRADE AREAS AND VOIDS RESULTING FROM DEMOLITION OF STRUCTURES TO THE FINAL LINES AND GRADES SHOWN ON THE CONTRACT DOCUMENTS. BACKFILL MATERIAL SHALL BE IDOT APPROVED CRUSHED LIMESTONE (CA-6) OR APPROVED EQUAL. USE SATISFACTORY SOIL MATERIALS CONSISTING OF STONE, GRAVEL AND SAND, FREE FROM DEBRIS, TRASH, FROZEN MATERIALS, ROOTS AND OTHER ORGANIC MATTER. PRIOR TO PLACEMENT OF FILL MATERIALS, ENSURE THAT AREAS TO BE FILLED ARE FREE OF STANDING WATER, FROST, FROZEN MATERIAL, TRASH AND DEBRIS. PLACE FILL MATERIALS IN HORIZONTAL LAYERS NOT EXCEEDING 9" IN LOOSE DEPTH. COMPACT EACH LAYER AT OPTIMUM MOISTURE CONTENT OF FILL MATERIAL TO 95% OF MODIFIED PROCTOR DENSITY UNLESS SUBSEQUENT EXCAVATION FOR NEW WORK IS REQUIRED.
16. TO HAVE AN EXISTING SERVICE DISCONNECTED CALL THE CITY DISPATCH OFFICE AT 630-420-6187. PLEASE ALLOW AT LEAST 24 HOURS NOTICE. METERS AND METER SEALS ARE TO BE REMOVED ONLY BY DPU-E PERSONNEL.

DEMOLITION LEGEND

- (A) ITEM TO REMAIN, PROTECT DURING CONSTRUCTION
- (B) //// CURB REMOVAL
- (C) X-X UTILITY REMOVAL
- (D) ITEM TO BE REMOVED
- (E) FULL-DEPTH ASPHALT PAVEMENT REMOVAL
- (F) CONCRETE REMOVAL
- (G) BUILDING REMOVAL
- (H) SAWCUT LINE
- (I) FENCE REMOVAL
- (J) UTILITY TO BE ABANDONED

NO.	REVISIONS	DATE	BY
1	REVISED PER SITE CHANGES	07/07/25	JTA
2	REVISED PER CITY	05/14/25	JTA
3	REVISED PER CITY	04/10/25	JTA
4	REVISED PER IDOT & CITY	03/07/25	INS
5	REVISED PER CITY	11/26/24	INS

Kimley»Horn
© 2024 KIMLEY-HORN AND ASSOCIATES, INC.
570 LAKE COOK ROAD, SUITE 200
DEERFIELD, IL 60015
PHONE: 847-520-5504
WWW.KIMLEY-HORN.COM

SCALE: AS NOTED
DESIGNED BY: JTA
DRAWN BY: TVC
CHECKED BY: INS

Casey's

EXISTING CONDITIONS & DEMO PLAN

CASEY'S
NAPERVILLE #6531
20 E. OGDEN AVE
NAPERVILLE, IL 60563

ORIGINAL ISSUE:
10/01/2024

KHA PROJECT NO.
168865042

SHEET NUMBER
C-100

Drawing name: K:\CHS_LDEV\168865042_Casey's_6531_Naperville_IL\2 Design\CAD\PlanSheets\C-100 EXISTING CONDITIONS & DEMO PLAN.dwg C-100 EXISTING CONDITIONS & DEMO PLAN Jul 03, 2025 12:07pm by Jake.Antony
This document, together with the concepts and designs presented herein, as an instrument of service, is intended only for the specific purpose and client for which it was prepared. Reuse of and improper reliance on this document without written authorization and adaptation by Kimley-Horn and Associates, Inc. shall be without liability to Kimley-Horn and Associates, Inc.

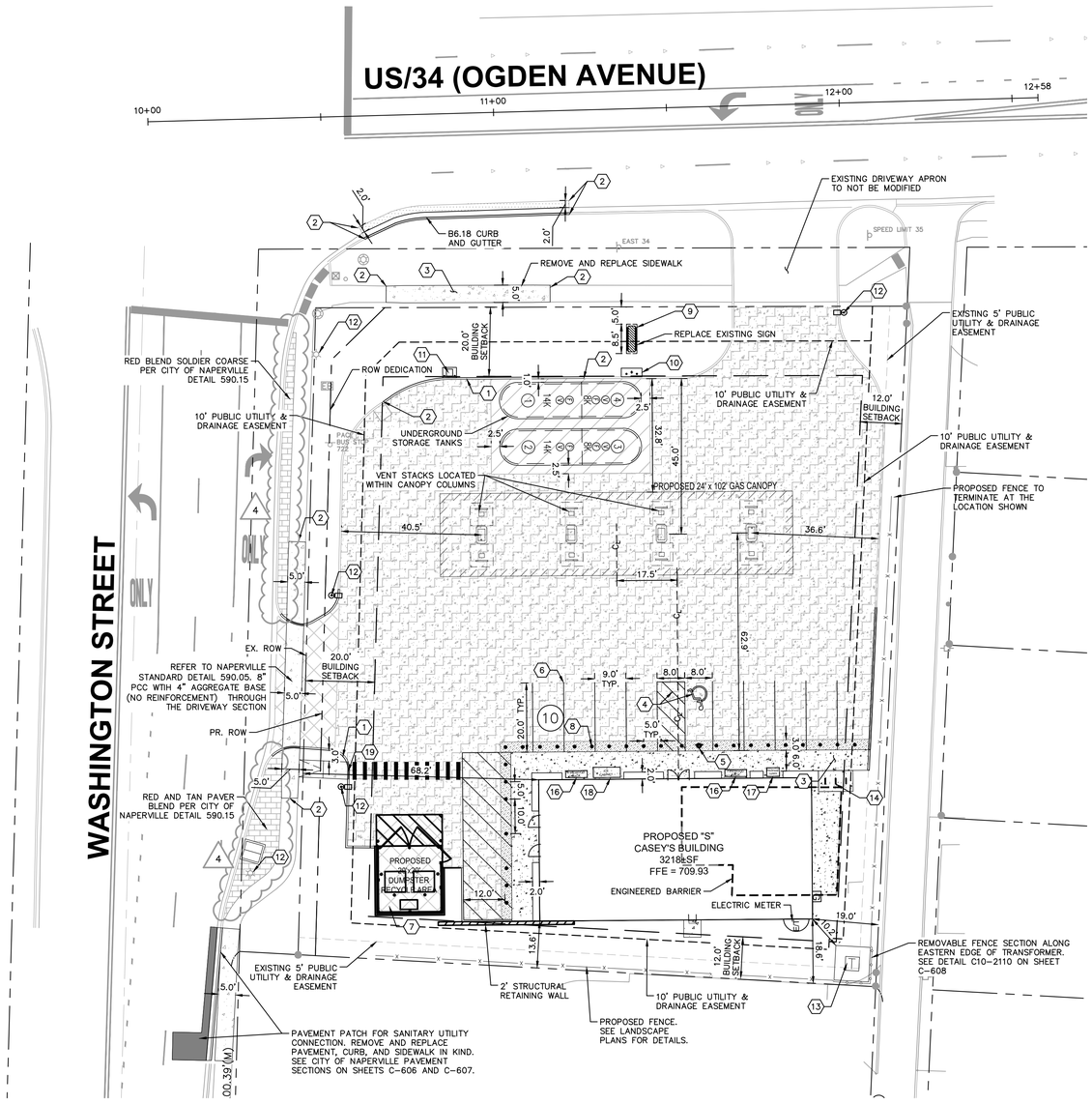

NORTH

GRAPHIC SCALE IN FEET
0 10 20 40

Call Before You Dig
JULIE
1-800-892-0123

GENERAL NOTES

1. ALL DIMENSIONS REFER TO THE FACE OF CURB UNLESS OTHERWISE NOTED.
2. BUILDING DIMENSIONS ARE TO THE OUTSIDE FACE OF BUILDING UNLESS OTHERWISE NOTED.
3. REFER TO ARCHITECTURAL AND STRUCTURAL PLANS TO VERIFY ALL BUILDING DIMENSIONS.
4. RADII ADJACENT TO PARKING STALL AND NOT DIMENSIONED ON THIS PLAN SHALL BE 3-FEET, TYPICAL.
5. REFER TO ARCHITECTURAL PLANS FOR MONUMENT SIGN DETAILS. SEE MEP PLANS FOR SITE ELECTRICAL DRAWINGS.
6. ALL PROPOSED ON-SITE STRIPING SHALL BE PAINTED UNLESS OTHERWISE NOTED.

KEY NOTES

(1) B6.12 CONCRETE CURB AND GUTTER, TYP. (SEE SHEET C-606)
(2) CONNECT TO EXISTING PAVEMENT, SIDEWALK, CURB, TYP.
(3) CONCRETE SIDEWALK, TYP. (SEE SHEET C-601 & C-607)
(4) ACCESSIBLE YELLOW PAVEMENT MARKINGS, TYP. (SEE SHEET C-607 - ADA STALL TO BE PAINTED YELLOW PER NAPERVILLE STANDARD 590.35)
(5) ACCESSIBLE PARKING SIGN, TYP. (MUTCD R7-8, SEE SHEET C-607)
(6) 4" WIDE PAINTED SOLID WHITE LINE, TYP.
(7) TRASH ENCLOSURE (SEE ARCHITECTURAL PLANS FOR DETAILS)
(8) BOLLARD, TYP. (SEE SHEET C-601 DETAIL 1)
(9) MONUMENT SIGN (SEE PLANS BY OTHERS)
(10) EMERGENCY SHUT-OFF SWITCH (SEE SHEET C-601 DETAIL 8)
(11) AIR COMPRESSOR BOX (SEE SHEET C-601 DETAIL 7)
(12) LIGHT POLES SHOWN FOR COORDINATION ONLY (SEE SITE LIGHTING PLANS)
(13) 10' X 10' TRANSFORMER PAD (FOR REFERENCE ONLY)
(14) BIKE RACK (TO BE PROCURED AND INSTALLED BY CONTRACTOR; WAVE STYLE, 3-LOOP, 5-BIKE CAPACITY, HEAVY DUTY, BLACK IN COLOR, SURFACE MOUNTED)
(15) DEPRESSED CURB AND GUTTER
(16) FIREWOOD RACK (SEE ARCHITECTURAL PLANS FOR DETAILS)
(17) PROPANE TANK CABINET (SEE ARCHITECTURAL PLANS FOR DETAILS)
(18) PACKAGED ICE CABINET (SEE ARCHITECTURAL PLANS FOR DETAILS)

PARKING SUMMARY

PARKING SPACES REQUIRED (CITY STANDARD)	= 15	SPACES
*4.5 SPACES / 1000 SF OF GROSS FLOOR AREA		
STANDARD PARKING SPACES PROVIDED	= 9	SPACES
FUEL CANOPY PARKING SPACES PROVIDED	= 12	SPACES
ACCESSIBLE PARKING SPACES REQUIRED	= 1	SPACES
ACCESSIBLE PARKING SPACES PROVIDED	= 1	SPACES
TOTAL PARKING SPACES PROVIDED	= 22	SPACES

CITY OF NAPERVILLE NOTES

- 2011 DEED RESTRICTION: ALL UNDERGROUND UTILITIES SHALL BE VAPOR TIGHT.
- 2011 DEED RESTRICTION: ALL UTILITY CONNECTIONS SHALL BE MADE TO PROHIBIT VAPOR AND LIQUID INTRUSION INTO STRUCTURES
- 2011 DEED RESTRICTION: NEW BUILDINGS CONSTRUCTED ON SITE SHALL BE REQUIRED TO INSTALL AN IMPERVIOUS LINER UNDER THE NEW FOUNDATION
- 2015 ENVIRONMENTAL NOTICE: ENGINEERED BARRIER CONSTRUCTED IN THE SOUTHWEST CORNER OF SITE
- 2015 ENVIRONMENTAL NOTICE: ANY CONTAMINATED SOIL OR GROUNDWATER REMOVED OR EXCAVATED FROM, OR DISTURBED AT, THE ABOVE REFERENCED SITE MUST BE HANDLED IN ACCORDANCE WITH ALL APPLICABLE LAWS AND REGULATIONS UNDER 35 ILL. ADM CODE SUBTITLE G (HAZARDOUS WASTE)

PAVING AND CURB LEGEND

CONCRETE SIDEWALK
SEE SHEET C-601 DETAIL 1 FOR CASEY'S PAVEMENT SECTION
SEE SHEET C-608 FOR CITY OF NAPERVILLE PAVEMENT SECTION

6" CONCRETE PAVEMENT (STANDARD)
SEE SHEET C-601 DETAIL 2 FOR PAVEMENT SECTION

8" CONCRETE PAVEMENT (HEAVY-DUTY)
SEE SHEET C-601 DETAIL 2 FOR PAVEMENT SECTION

8" REINFORCED CONCRETE PAVEMENT FOR UNDERGROUND TANKS
SEE SHEET C-601 DETAIL 2 FOR PAVEMENT SECTION

3' WIDE CONCRETE BAND (BOLLARD ISOLATION)
SEE SHEET C-601 DETAIL 1 FOR PAVEMENT SECTION

2' PAVEMENT PATCH
MATCH EXISTING ROADWAY SECTION, SEE IDOT PAVEMENT PATCH DETAIL

CITY OF NAPERVILLE DOWNTOWN STREETCAPE PAVERS
CONCRETE PAVERS TO BE INSTALLED PER CITY DETAIL 590.15

STANDARD PITCH CONCRETE CURB AND GUTTER
REVERSE PITCH CONCRETE CURB AND GUTTER
CONCRETE DEPRESSED CURB AND GUTTER

UNDERGROUND STORAGE TANK BALLAST REQUIREMENTS
AFTER SUCCESSFUL INSTALL OF UNDERGROUND STORAGE TANKS, DISPOSAL OF TANK BALLAST WATER SHOULD BE DISCHARGED TO THE CITY OF NAPERVILLE STORM SEWER SYSTEM.

SITE DATA TABLE

EXISTING IMPERVIOUS AREA:	= 23,285 SQ FT / 0.53 AC
EXISTING PERVIOUS AREA:	= 8,143 SQ FT / 0.19 AC
PROPOSED IMPERVIOUS AREA:	= 24,378 SQ FT / 0.56 AC
PROPOSED PERVIOUS AREA:	= 7,050 SQ FT / 0.16 AC
NET DIFFERENCE IMPERVIOUS:	= 1,093 SQ FT / 0.03 AC
BUILDING AREA	= 3,218 SF
PROPERTY AREA	= 31,428 SF
FAR	= 0.102
MAXIMUM FAR ALLOWED	= 0.325

PER CITY OF NAPERVILLE, POST CONSTRUCTION BEST MANAGEMENT PRACTICES (PCBMPS) ARE NOT REQUIRED FOR THIS STORMWATER MANAGEMENT.

FEMA NOTE

PER FLOOD INSURANCE RATE MAP PANEL NO. 17043C0231J, THE SITE OR A PORTION OF THE SITE IS LOCATED IN ZONE X.

NO.	REVISIONS	DATE	BY
1	REVISED PER SITE CHANGES	07/07/25	JTA
2	REVISED PER CITY	05/14/25	JTA
3	REVISED PER CITY	04/10/25	JTA
4	REVISED PER IDOT & CITY	03/07/25	INS
5	REVISED PER CITY	11/26/24	INS

Kimley»Horn
© 2024 KIMLEY-HORN AND ASSOCIATES, INC.
570 LAKE COOK ROAD, SUITE 200
DEERFIELD, IL 60015
PHONE: 847-520-9200
WWW.KIMLEY-HORN.COM

SCALE: AS NOTED
DESIGNED BY: JTA
DRAWN BY: TVC
CHECKED BY: INS

Casey's

SITE PLAN

CASEY'S
NAPERVILLE #6531
20 E. OGDEN AVE
NAPERVILLE, IL 60563

ORIGINAL ISSUE:
10/01/2024
KHA PROJECT NO.
168865042
SHEET NUMBER
C-101

Drawing name: K:\CHS_LDEV\168865042_Casey's_6531_Naperville_IL\2 Design\CAD\PlanSheets\C-101 SITE PLAN.dwg C-101 Jul 03, 2025 12:08pm by JakeAntony
This document, together with the concepts and designs presented herein, as an instrument of service, is intended only for the specific purpose and client for which it was prepared. Reuse of and improper reliance on this document without written authorization and adaptation by Kimley-Horn and Associates, Inc. shall be without liability to Kimley-Horn and Associates, Inc.

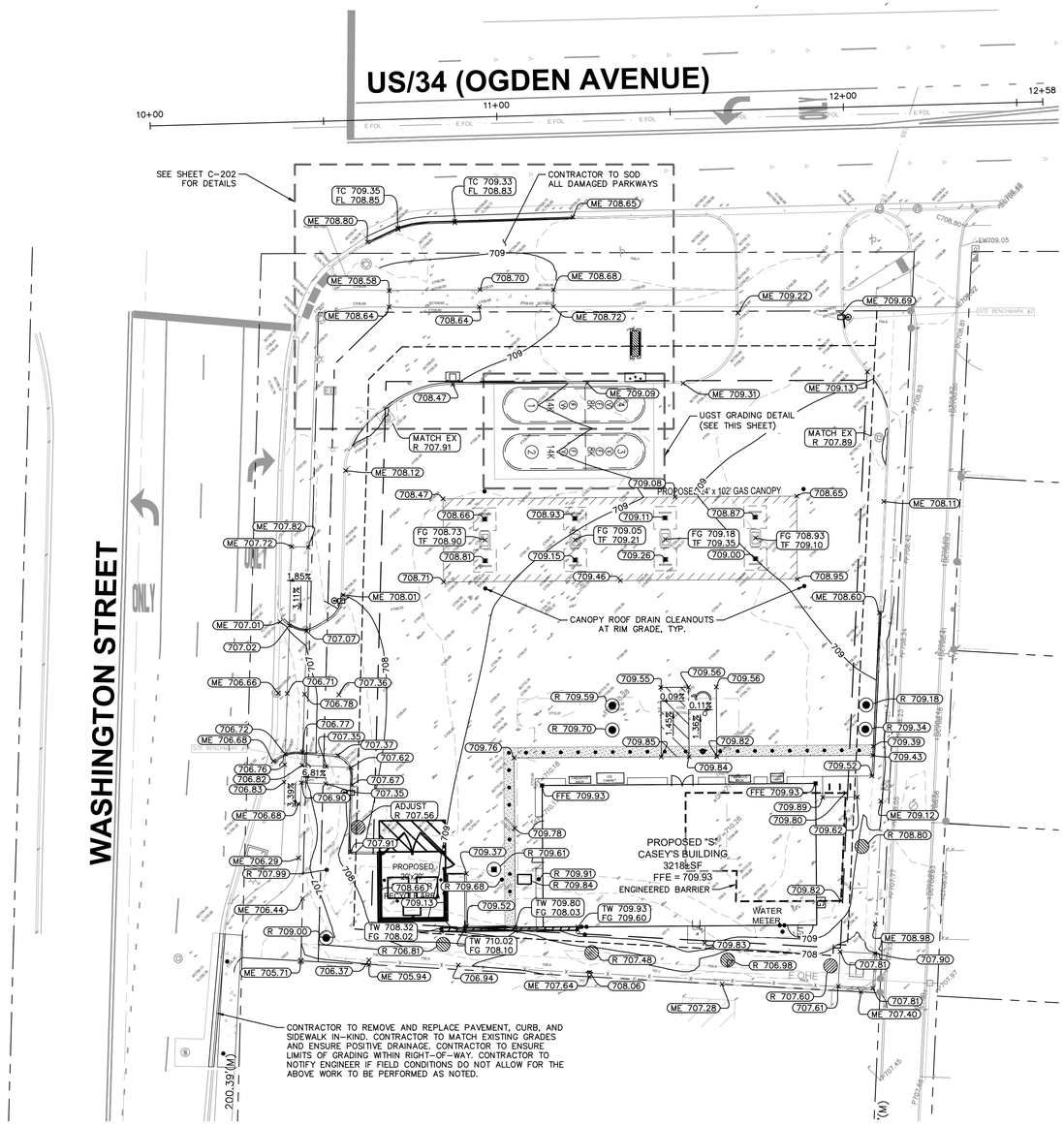

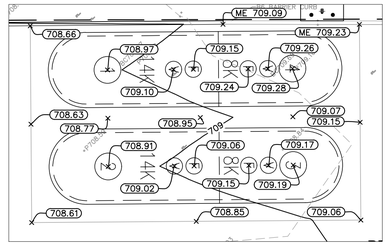

UGST GRADING DETAIL
N.T.S.

NORTH

GRAPHIC SCALE IN FEET
0 10 20 40

Call Before You Dig
JULIE
1-800-892-0123

GRADING NOTES

1. CONTRACTOR TO VERIFY ALL EXISTING TOPOGRAPHY AND STRUCTURES ON THE SITE AND IMMEDIATELY NOTIFY THE ENGINEER OF ANY DISCREPANCIES PRIOR TO STARTING WORK.
2. ALL PAVEMENT SPOT GRADE ELEVATIONS AND RIM ELEVATIONS WITHIN OR ALONG CURB AND GUTTER REFER TO FLOW LINE ELEVATIONS UNLESS OTHERWISE NOTED.
3. ALL ELEVATIONS SHOWN DEPICT FINISHED GRADE UNLESS OTHERWISE NOTED. GENERAL CONTRACTOR TO COORDINATE WITH EXCAVATION, LANDSCAPE AND PAVING SUBCONTRACTORS REGARDING TOPSOIL THICKNESS FOR LANDSCAPE AREAS AND PAVEMENT SECTION THICKNESS FOR PAVED AREAS TO PROPERLY ENSURE ADEQUATE CUT TO ESTABLISH SUBGRADE ELEVATIONS.
4. NO EARTHEN SLOPE SHALL BE GREATER THAN 3:1, UNLESS OTHERWISE NOTED.
5. MAXIMUM SLOPE IN ACCESSIBLE PARKING SPACES AND LOADING ZONES SHALL NOT EXCEED 2.0% IN ALL DIRECTIONS.
6. MAXIMUM RUNNING SLOPE SHALL NOT EXCEED 5% AND CROSS SLOPE SHALL NOT EXCEED 2% ON ALL SIDEWALKS AND ACCESSIBLE ROUTES.
7. WHEN NATURAL FLOW OF DRAINAGE IS AWAY FROM CURB, CONTRACTOR TO INSTALL REVERSE GUTTER PITCH.
8. MATCH EXISTING ELEVATIONS AT THE PROPERTY LIMITS.

GRADING LEGEND

TP	TOP OF PAVEMENT
EP	EDGE OF PAVEMENT
FL	FLOW LINE
TC	TOP OF CURB
ME	MATCH ELEVATION
TF	TOP OF FOUNDATION
R	RIM ELEVATION
TW	TOP OF WALL
FG	FINISHED GRADE
XXX	PROPOSED CONTOUR
XXX	EXISTING CONTOUR
RIDGE	RIDGE LINE
X.XX%	SLOPE AND FLOW DIRECTION
	100-YEAR OVERLAND OVERFLOW ROUTE
	DETENTION BASIN 100-YEAR EMERGENCY OVERLAND OVERFLOW ROUTE
	PROPOSED SWALE
	PROPOSED RETAINING WALL
	REVERSED PITCH CURB AND GUTTER
AR	ACCESSIBLE ROUTE
	RIP RAP (SEE DETAILS)

DETENTION SUMMARY

EXISTING DETENTION	=1,025.5 CUBIC-FT
PROPOSED DETENTION	=1,226.8 CUBIC-FT
CHANGE IN VOLUME	=201.3 CUBIC-FT

4

6531 Naperville - Existing Detention

Area			Average Area	Incremental Storage	Cummulative Storage
Elevation					
(ft)	(ft^2)	(acre)	(ft^2)	(ft^3)	(ft^3)
96.90	1,040	0.024			
			1065.09	106.50	
97.00	1,090	0.025			
			1319.61	919.03	
97.70	1,549	0.036			**1025.5**

6531 Naperville - Proposed Detention

Area				Cummulative Storage
Size	Type	Length	Area	
(in)		(ft)	(ft^2)	(ft^3)
12	HDPE	179	0.79	**140.59**
12	C-900	35	0.79	**27.49**
30	HDPE	187	4.91	**917.93**
			Total Storage	**1086.0**

Structure	HWL	Elevation to Lowest	Depth (ft)	Diameter (ft)	Volume (ft^3)
D1	706.81	705.00	1.81	4	22.75
D2	706.81	705.03	1.78	4	22.37
D3	706.81	705.07	1.74	4	21.87
D4	706.81	705.11	1.7	4	21.36
D5	706.81	705.15	1.66	4	20.86
D6	706.81	705.20	1.61	5	31.61
				Total Storage	**140.8**
				Total Storage	**1226.8**

4

NO.	REVISIONS	DATE	BY
1	REVISED PER SITE CHANGES	07/07/25	JTA
2	REVISED PER CITY	05/14/25	JTA
3	REVISED PER CITY	04/10/25	JTA
4	REVISED PER IDOT & CITY	03/07/25	INS
5	REVISED PER CITY	11/26/24	INS

Kimley»Horn
© 2024 KIMLEY-HORN AND ASSOCIATES, INC.
570 LAKE COOK ROAD, SUITE 200
DEERFIELD, IL 60015
PHONE: 847-520-9200
WWW.KIMLEY-HORN.COM

SCALE: AS NOTED
DESIGNED BY: JTA
DRAWN BY: TVC
CHECKED BY: INS

Casey's

GRADING PLAN

CASEY'S
NAPERVILLE #6531
20 E. OGDEN AVE
NAPERVILLE, IL 60563

ORIGINAL ISSUE:
10/01/2024
KHA PROJECT NO.
168865042

SHEET NUMBER
C-201

Drawing name: K:\CHS_LDEV\168865042_Casey's_6531_Naperville_IL\2 Design\CAD\PlanSheets\C-201 GRADING PLAN.dwg C-201 Jul 03, 2025 12:08pm by: Jake.Antony
This document, together with the concepts and designs presented herein, as an instrument of service, is intended only for the specific purpose and client for which it was prepared. Reuse of and improper reliance on this document without written authorization and adaptation by Kimley-Horn and Associates, Inc. shall be without liability to Kimley-Horn and Associates, Inc.

This document, together with the concepts and designs presented herein, as an instrument of service, is intended only for the specific purpose and client for which it was prepared. Reuse of and improper reliance on this document without written authorization and adaptation by Kimley-Horn and Associates, Inc. shall be without liability to Kimley-Horn and Associates, Inc.

Drawing name: K:\CHS_LOEV\168865042_Casey's_6531_Naperville_IL\2 Design\CAD\PlanSheets\C-202 IDOT GRADING PLAN.dwg C-202 Jul 03, 2025 12:08pm by Jake.Antony

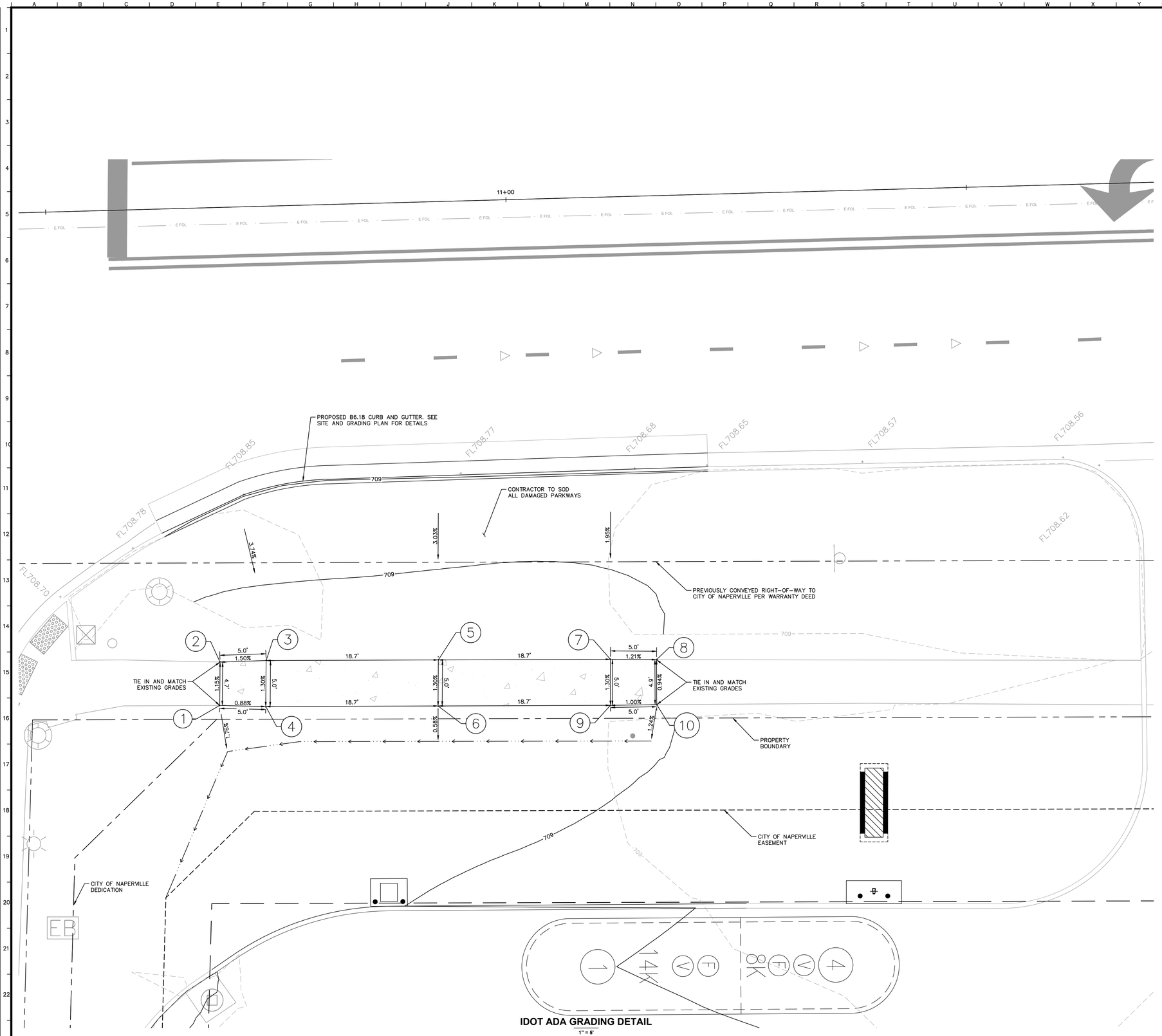

IDOT ADA GRADING DETAIL
1" = 5'

IDOT Detail			
CALLOUT	STATION	OFFSET	ELEVATION
1	10+67.44	54.071 RT	708.64
2	10+67.61	49.366 RT	708.58
3	10+72.62	49.336 RT	708.66
4	10+72.44	54.334 RT	708.59
5	10+91.31	49.772 RT	708.70
6	10+91.15	54.770 RT	708.63
7	11+10.00	50.207 RT	708.74
8	11+14.99	50.383 RT	708.68
9	11+09.86	55.206 RT	708.67
10	11+14.88	55.264 RT	708.72

Call Before You Dig
JULIE
1-800-892-0123

NO.	REVISIONS	DATE	BY
1	REVISED PER SITE CHANGES	07/07/25	JTA
2	REVISED PER CITY	05/14/25	JTA
3	REVISED PER CITY	04/10/25	JTA
4	REVISED PER IDOT & CITY	03/07/25	INS
5	REVISED PER CITY	11/26/24	INS

Kimley»Horn
© 2024 KIMLEY-HORN AND ASSOCIATES, INC.
570 LAKE COOK ROAD, SUITE 200
DEERFIELD, IL 60015
PHONE: 847-405-9004
WWW.KIMLEY-HORN.COM

SCALE: AS NOTED
DESIGNED BY: JTA
DRAWN BY: TVC
CHECKED BY: INS

Casey's

CASEY'S
NAPERVILLE #6531
20 E. OGDEN AVE
NAPERVILLE, IL 60563

IDOT ADA GRADING DETAIL

ORIGINAL ISSUE: 10/01/2024
KHA PROJECT NO. 168865042
SHEET NUMBER
C-202

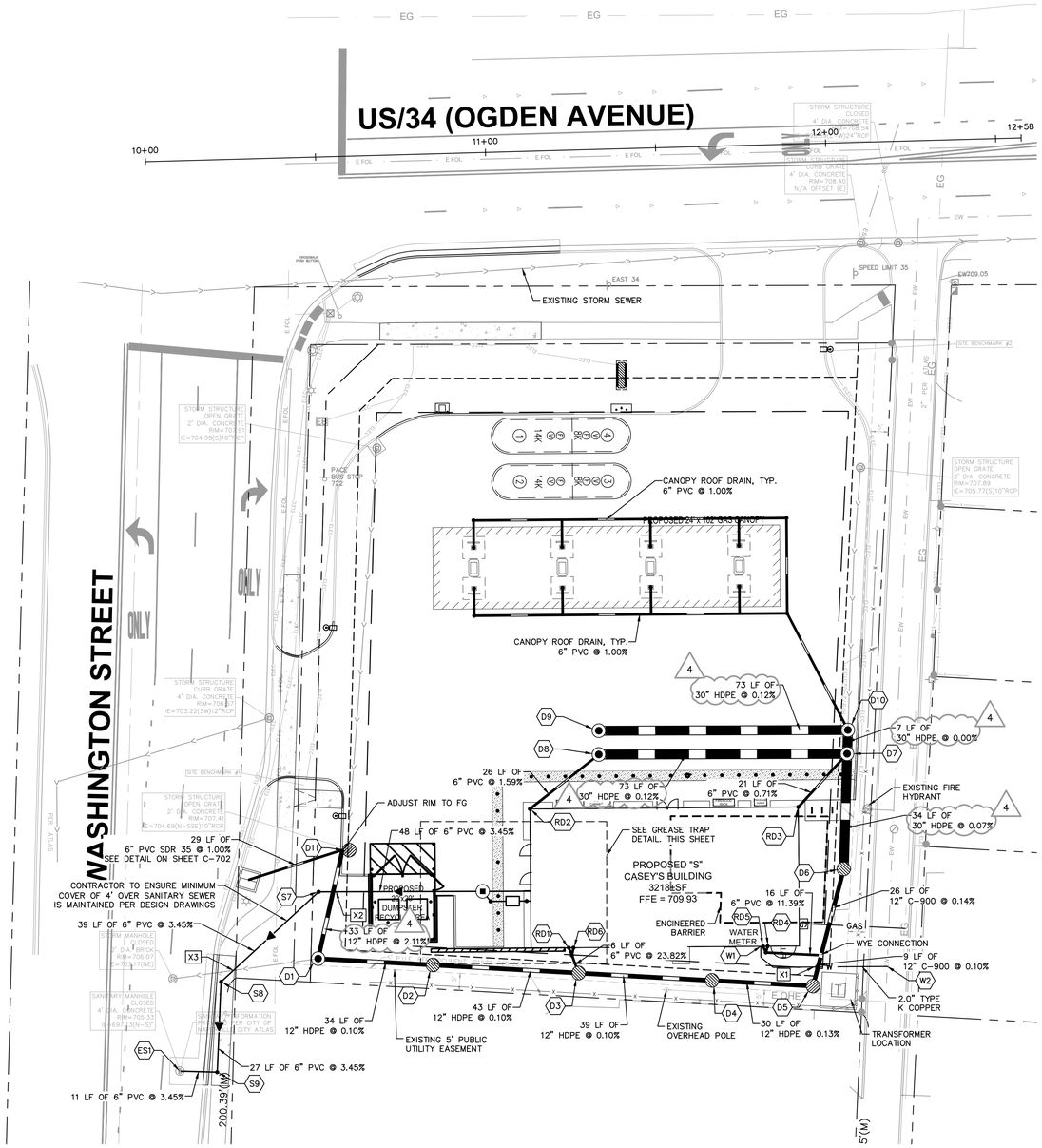

WATER STRUCTURE TABLE	
STRUCTURE NAME:	DETAILS:
W1	WATER SERVICE BUILDING CONNECTION FG ELEV: 709.93
W2	CONNECT TO EXISTING WATERMAIN CONTRACTOR TO FIELD VERIFY LOCATION AND DEPTH FG ELEV: 707.92

SANITARY STRUCTURE TABLE	
STRUCTURE NAME:	DETAILS:
S1	GREASE LINE BUILDING CONNECTION INV OUT: 705.43 (W, 6")
S2	SANITARY SEWER BUILDING CONNECTION INV OUT: 705.40 (W, 6")

SANITARY STRUCTURE TABLE	
STRUCTURE NAME:	DETAILS:
ES1	CORE AND CONNECT INTO EXISTING SANITARY MANHOLE RIM: 705.33 INV IN: 699.00 (E, 6") INV OUT: 697.13 (S, 8")
S3	6" CLEANOUT RIM: 709.91 INV IN: 705.41 (E, 6") INV OUT: 705.41 (W, 6")
S4	SCHIER GB-75 GREASE TRAP SEE DETAILS RIM: 709.84 INV IN: 705.32 (E, 6") INV OUT: 705.32 (W, 6")
S5	6" CLEANOUT RIM: 709.68 INV IN: 705.19 (E, 6") INV OUT: 705.19 (NW, 6")
S6	SANITARY MANHOLE RIM: 709.61 INV IN: 705.05 (E, 6") INV IN: 705.05 (SE, 6") INV OUT: 703.30 (W, 6")
S7	6" CLEANOUT RIM: 707.99 INV IN: 701.64 (E, 6") INV OUT: 701.64 (SW, 6")
S8	6" CLEANOUT INV IN: 700.29 (NE, 6") INV OUT: 700.29 (S, 6")
S9	6" CLEANOUT INV IN: 699.38 (N, 6") INV OUT: 699.38 (W, 6")

MISCELLANEOUS STORM STRUCTURE TABLE	
STRUCTURE NAME:	DETAILS:
RD1	ROOF DRAIN INV OUT: 706.00 (SE, 6")
RD2	ROOF DRAIN INV OUT: 706.00 (NE, 6")
RD3	ROOF DRAIN INV OUT: 705.76 (NE, 6")
RD4	ROOF DRAIN INV OUT: 706.50 (S, 6")
RD5	ROOF DRAIN INV OUT: 706.50 (SE, 6")
RD6	ROOF DRAIN INV OUT: 706.00 (S, 6")

STORM STRUCTURE TABLE	
STRUCTURE NAME:	DETAILS:
D1	STORM MH – EXPOSED CLOSED LID OULET CONTROL STRUCTURE SEE CONSTRUCTION DETAILS RIM: 709.00 INV IN: 704.00 (E, 12") INV IN: 704.00 (N, 12") INV OUT: 703.97 (W, 10")
D2	48" STORM MH – OPEN LID RIM: 706.81 INV IN: 704.03 (E, 12") INV OUT: 704.03 (W, 12")
D3	48" STORM MH – OPEN LID RIM: 707.48 INV IN: 704.08 (E, 12") INV IN: 704.10 (N, 6") INV OUT: 704.08 (W, 12")
D4	48" STORM MH – OPEN LID RIM: 706.98 INV IN: 704.12 (E, 12") INV OUT: 704.12 (W, 12")
D5	48" STORM MH – OPEN LID RIM: 707.60 INV IN: 704.15 (N, 12") INV OUT: 704.15 (W, 12")
D6	60" STORM MH – OPEN LID RIM: 708.80 INV IN: 704.20 (N, 30") INV OUT: 704.20 (S, 12")
D7	72" STORM MH – CLOSED LID RIM: 709.34 INV IN: 704.22 (N, 30") INV IN: 704.22 (W, 30") INV IN: 705.61 (SW, 6") INV OUT: 704.22 (S, 30")
D8	60" STORM MH – CLOSED LID RIM: 709.70 INV IN: 705.59 (SW, 6") INV OUT: 704.31 (E, 30")
D9	60" STORM MH – CLOSED LID RIM: 709.59 INV OUT: 704.31 (E, 30")
D10	72" STORM MH – CLOSED LID RIM: 709.18 INV IN: 704.22 (W, 30") INV IN: 705.48 (N, 12") INV IN: 704.25 (NW, 6") INV OUT: 704.22 (S, 30")
D11	MH – OPEN LID IN CURB RIM: 707.56 INV IN: 704.69 (N, 10") INV IN: 705.00 (W, 6") INV OUT: 704.69 (S, 12")

UTILITY CROSSING LEGEND

X1	18" STORM 2.0" WATER	B/P = 704.13 T/P = 702.61
X2	12" STORM 6" SAN.	B/P = 704.25 T/P = 702.33
X3	10" STORM 6" SAN.	B/P = 703.48 T/P = 700.98

NOTE: WHERE THERE IS LESS THAN 10 FT HORIZONTAL OR 18–IN VERTICAL SEPARATION BETWEEN A SEWER AND WATER MAIN, OR IF WATER MAIN CROSSES UNDER A SEWER, WATER MAIN QUALITY PIPE IS TO BE USED TO CONSTRUCT THE SEWER OR EITHER PIPE IS TO BE ENCASED. THE PROTECTION MUST EXTEND ON EACH SIDE OF THE CROSSING UNTIL THE DISTANCE BETWEEN THE WATER MAIN AND SEWER IS AT LEAST 10 FT. ACCEPTABLE WATER MAIN QUALITY PIPE INCLUDES PVC SDR/WMQ MEETING ASTM D2241 WITH JOINTS MEETING ASTM D3139 OR DUCTILE IRON PIPE. RCP STORM SEWER WITH FLEXIBLE GASKET JOINTS MEETING ASTM C361 OR ASTM C443 IS ALSO ACCEPTABLE AT CROSSINGS.

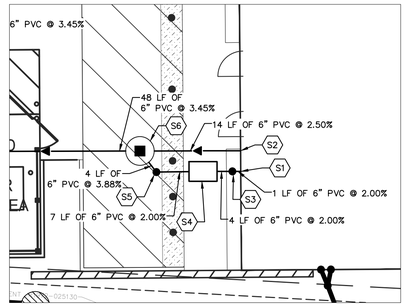

GREASE TRAP
1" = 10'

NORTH

GRAPHIC SCALE IN FEET
0 10 20 40

Call Before You Dig
JULIE
1-800-892-0123

UTILITY NOTES

1. ALL WATER LINES ≥ 4" SHALL BE ANSI /AWWA PVC C–900 WATERMAIN QUALITY PIPE.
2. ALL SANITARY SEWER LINES SHALL BE PVC MEETING, ASTM D–3034 SDR 26 EXCEPT FOR SANITARY SEWER THAT CROSSES ABOVE WATER MAIN, THIS PIPE SHALL BE AWWA C900 (UNLESS WATER MAIN CASING IS UTILIZED). PROVIDE 42" MINIMUM COVER.
3. CONTRACTOR SHALL COORDINATE ANY DISRUPTIONS TO EXISTING UTILITY SERVICES WITH ADJACENT PROPERTY OWNERS.
4. ALL ELECTRIC AND TELEPHONE EXTENSIONS INCLUDING SERVICE LINES SHALL BE CONSTRUCTED TO THE APPROPRIATE UTILITY COMPANY SPECIFICATIONS. ALL UTILITY DISCONNECTIONS SHALL BE COORDINATED WITH THE DESIGNATED UTILITY COMPANIES.
5. CONSTRUCTION SHALL NOT START ON ANY PUBLIC UTILITY SYSTEM UNTIL WRITTEN APPROVAL HAS BEEN RECEIVED BY THE ENGINEER FROM THE APPROPRIATE GOVERNING AUTHORITY AND CONTRACTOR HAS BEEN NOTIFIED BY THE ENGINEER.
6. CONTRACTOR TO CALL "JULIE" (1–800–892–0123) TO COORDINATE FIELD LOCATIONS OF EXISTING UNDERGROUND UTILITIES BEFORE ORDERING MATERIALS OR COMMENCING CONSTRUCTION. NOTIFY ENGINEER OF ANY DISCREPANCIES IMMEDIATELY.
7. PRIOR TO THE CONSTRUCTION OF OR CONNECTION TO ANY STORM DRAIN, SANITARY SEWER, WATER MAIN OR ANY OTHER UTILITIES, THE CONTRACTOR SHALL EXCAVATE, VERIFY AND CALCULATE ALL POINTS OF CONNECTION AND ALL UTILITY CROSSINGS AND INFORM THE ENGINEER AND THE OWNER/ DEVELOPER OF ANY CONFLICT OR REQUIRED DEVIATIONS FROM THE PLAN. NOTIFICATION SHALL BE MADE A MINIMUM OF 72 HOURS PRIOR TO CONSTRUCTION. THE ENGINEER AND ITS CLIENTS SHALL BE HELD HARMLESS IN THE EVENT THAT THE CONTRACTOR FAILS TO MAKE SUCH NOTIFICATION. THE MUNICIPALITY SHALL BE NOTIFIED OF ANY AND ALL CHANGES TO THE DESIGN PLANS.
8. CONTRACTOR SHALL COMPLY COMPLETELY WITH THE LATEST STANDARDS OF OSHA DIRECTIVES OR ANY OTHER AGENCY HAVING JURISDICTION FOR EXCAVATION AND TRENCHING PROCEDURES. THE CONTRACTOR SHALL USE SUPPORT SYSTEMS, SLOPING, BENCHING AND OTHER MEANS OF PROTECTION. THIS IS TO INCLUDE, BUT NOT LIMITED FOR ACCESS AND EGRESS FROM ALL EXCAVATION AND TRENCHING. CONTRACTOR IS RESPONSIBLE FOR COMPLYING WITH PERFORMANCE CRITERIA AS REQUIRED BY OSHA.
9. CONTRACTOR TO AVOID DISRUPTION OF ANY ADJACENT TENANT'S TRAFFIC OPERATIONS DURING INSTALLATION OF UTILITIES.
10. ALL DIMENSIONS ARE TO CENTERLINE OF PIPE OR CENTER OF MANHOLE UNLESS NOTED OTHERWISE.
11. SEE ARCHITECTURAL AND MEP PLANS FOR EXACT UTILITY CONNECTION LOCATIONS AT BUILDING.
12. LIGHT POLES SHOWN FOR COORDINATION PURPOSES ONLY AND DO NOT REPRESENT ACTUAL SIZE. SEE SITE LIGHTING PLANS BY OTHERS FOR MORE INFORMATION.
13. SEE DETAILS FOR LOCATING STORM STRUCTURES WITHIN THE CURB LINE.
14. STORMWATER FACILITIES MUST BE FUNCTIONAL BEFORE BUILDING CONSTRUCTION BEGINS IF REQUIRED BY AUTHORITY HAVING JURISDICTION.
15. ALL PROPOSED STORM SEWER RUNS ARE PRIVATE.

UTILITY LEGEND

- EX. WATER LINE
- EX. HYDRANT
- EX. WATER VALVE
- EX. SANITARY SEWER LINE
- EX. SANITARY SEWER MANHOLE
- EX. STORM DRAIN LINE
- EX. STORM MANHOLE
- EX. STORM STRUCTURE/INLET
- EX. UNDERGROUND FIBER OPTIC LINE
- EX. UNDERGROUND ELECTRIC LINE
- EX. OVERHEAD ELECTRIC LINE
- EX. LIGHT POLE
- PROPOSED UNDERGROUND ELECTRIC LINE
- GAS LINE (BY GAS COMPANY)
- PROPOSED PHONE LINE
- PROPOSED STORM SEWER LINE
- PROPOSED OPEN LID STORM STRUCTURE (PAVEMENT USE NEENAH R–2540) (GRASS USE NEENAH R–4340–B BEEHIVE)
- PROPOSED CLOSED LID STORM STRUCTURE (PAVEMENT USE NEENAH R–1713) (GRASS USE NEENAH R–1786)
- PROPOSED COMBINATION CURB INLET (86.12 C&G USE NEENAH R–3281–A)
- PROPOSED FLARED END SECTION
- PROPOSED SANITARY SEWER LINE
- PROPOSED SANITARY MANHOLE
- PROPOSED STORM/SANITARY CLEANOUT
- PROPOSED WATER LINE
- PROPOSED VALVE VAULT
- PROPOSED VALVE BOX
- PROPOSED FIRE HYDRANT
- PROPOSED LIGHT POLE
- PROPOSED TRANSFORMER PAD (FOR REFERENCE ONLY)
- RIP RAP (SEE DETAILS)

NO.	REVISIONS	DATE	BY
1	REVISED PER CITY	11/26/24	INS
2	REVISED PER IDOT & CITY	03/07/25	INS
3	REVISED PER CITY	04/10/25	JTA
4	REVISED PER CITY	05/14/25	JTA
5	REVISED PER SITE CHANGES	07/07/25	JTA

Kimley»Horn

© 2024 KIMLEY-HORN AND ASSOCIATES, INC.
570 LAKE COOK ROAD, SUITE 200
DEERFIELD, IL 60015
PHONE: (847) 520-9200
WWW.KIMLEY-HORN.COM

SCALE: AS NOTED
DESIGNED BY: JTA
DRAWN BY: TVC
CHECKED BY: INS

Casey's

CASEY'S
NAPERVILLE #6531
20 E. OGDEN AVE
NAPERVILLE, IL 60563

UTILITY PLAN

ORIGINAL ISSUE: 10/01/2024
KHA PROJECT NO. 168865042
SHEET NUMBER
C-301

Drawing name: K:\CHS_LDEV\168865042_Casey's_6531_Naperville_IL\2 Design\CAD\PlanSheets\C-301 UTILITY PLAN.dwg C-301 Jul 03, 2025 12:09pm by: JakeAntony
This document, together with the concepts and designs presented herein, as an instrument of service, is intended only for the specific purpose and client for which it was prepared. Reuse of and improper reliance on this document without written authorization and adaptation by Kimley-Horn and Associates, Inc. shall be without liability to Kimley-Horn and Associates, Inc.

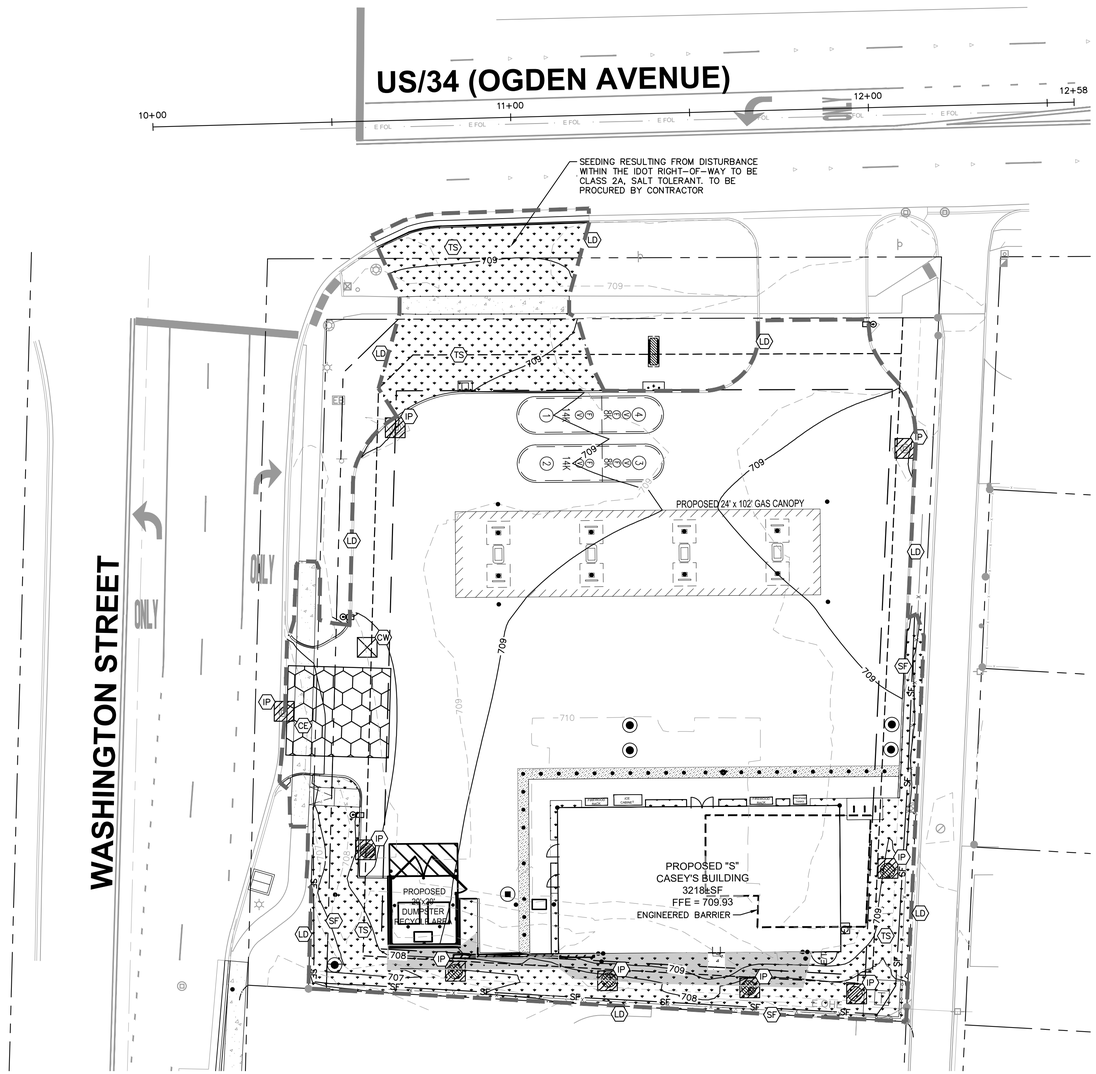

NORTH

GRAPHIC SCALE IN FEET
0 10 20 40

Call Before You Dig
JULIE
1-800-892-0123

EROSION CONTROL LEGEND

- TS — TEMPORARY SEEDING (SEE EROSION CONTROL DETAILS)
- EB — TEMPORARY EROSION CONTROL BLANKET (SEE EROSION CONTROL NOTE #7)
- CE — CONSTRUCTION ENTRANCE (SEE EROSION CONTROL DETAILS)
- SF — SILT FENCE (SEE EROSION CONTROL DETAILS)
- IP — INLET PROTECTION (SEE EROSION CONTROL DETAILS)
- CW — CONCRETE WASHOUT (SEE EROSION CONTROL DETAILS) (TO BE DETERMINED BY CONTRACTOR)
- SS — TEMPORARY SOIL STOCKPILE
- LD — LIMITS OF DISTURBANCE
- XXX — EXISTING CONTOURS
- XXX — PROPOSED CONTOURS
- TP — TREE PROTECTION

EROSION CONTROL SCHEDULE AND SEQUENCING:

I.	ROUGH GRADING	CONSTRUCTION ENTRANCE/EXIT, SILT FENCE PROTECTION, CONCRETE WASHOUT AREA AND TREE PROTECTION SHALL BE INSTALLED PRIOR TO THE INITIATION OF ROUGH GRADING, AS NEEDED. TEMPORARY EROSION CONTROL MEASURES TO BE INSTALLED UPON COMPLETION OF ROUGH GRADING AND AS NECESSARY THROUGHOUT CONSTRUCTION.
II.	UTILITY INSTALLATION	ALL PRIOR EROSION CONTROL MEASURES INSTALLED ABOVE TO BE MAINTAINED AS NECESSARY DURING UTILITY INSTALLATION. STORM STRUCTURE INLET PROTECTION SHALL BE INSTALLED AS STORM DRAINAGE SYSTEM IS CONSTRUCTED.
III.	PAVING	ALL PRIOR EROSION CONTROL MEASURES INSTALLED ABOVE TO BE MAINTAINED AS NECESSARY DURING PAVING AND THROUGHOUT THE REMAINDER OF THE PROJECT.
IV.	FINAL GRADING/SOIL STABILIZATION/ LANDSCAPING	ALL TEMPORARY EROSION CONTROL MEASURES TO BE REMOVED AT THE CONCLUSION OF THE PROJECT AS DIRECTED BY THE LOCAL MUNICIPALITY.

NOTE: THE SEQUENCE OF CONSTRUCTION SHOWN ABOVE IS A GENERAL OVERVIEW AND IS INTENDED TO CONVEY THE GENERAL CONCEPTS OF THE EROSION CONTROL DESIGN AND SHOULD NOT BE RELIED UPON FOR CONSTRUCTION PURPOSES. THE CONTRACTOR IS SOLELY RESPONSIBLE FOR DETAILED PHASING AND CONSTRUCTION SEQUENCING NECESSARY TO CONSTRUCT THE PROPOSED IMPROVEMENTS INCLUDED IN THESE PLANS. THE CONTRACTOR SHALL NOTIFY ENGINEER IN WRITING IMMEDIATELY, PRIOR TO AND/OR DURING CONSTRUCTION IF ANY ADDITIONAL INFORMATION ON THE CONSTRUCTION SEQUENCE IS NECESSARY. CONTRACTOR IS SOLELY RESPONSIBLE FOR COMPLYING WITH THE REQUIREMENTS OF THE AUTHORITY HAVING JURISDICTION AND ALL OTHER APPLICABLE LAWS.

CITY OF NAPERVILLE EROSION CONTROL NOTES

1. THE CONTRACTOR SHALL MAINTAIN PROPER DRAINAGE AT ALL TIMES DURING THE COURSE OF CONSTRUCTION AND PREVENT STORM WATER FROM RUNNING INTO OR STANDING IN EXCAVATED AREAS.
2. DURING EXTENDED DRY PERIODS, THE CONSTRUCTION AREA(S) MAY NEED TO BE WATERED DOWN TO PREVENT THE BLOWING OF SOIL FROM THE SITE.
3. DURING CONSTRUCTION, A STABILIZED CONSTRUCTION ENTRANCE SHALL BE UTILIZED TO MINIMIZE THE TRACKING OF DIRT ONTO THE PUBLIC STREETS. IT IS THE CONTRACTOR'S RESPONSIBILITY TO KEEP PUBLIC STREET PAVEMENT CLEAN OF DIRT AND DEBRIS. ANY DIRT THAT IS TRACKED ONTO THE PUBLIC STREETS SHALL BE REMOVED THE SAME DAY. IF THE AMOUNT TRACKED ON THE PUBLIC STREET IS EXCESSIVE, CLEANING MAY BE REQUIRED MORE FREQUENTLY.
4. ALL EROSION CONTROL MEASURES SHALL BE PROPERLY INSTALLED, AS PERMITTED, PRIOR TO ANY LAND DISTURBANCE ACTIVITIES. ALL EROSION CONTROL SHALL BE MAINTAINED UNTIL TURF IS ESTABLISHED.
5. ACCEPTABLE PERIMETER EROSION CONTROL INCLUDES SILT FENCE, SILT WORM AND ANY OTHER APPLICATION APPROVED BY THE CITY ENGINEER.
6. ALL OPEN GRATE STRUCTURES SHALL HAVE EROSION CONTROL PROTECTION IN ACCORDANCE WITH THE APPROVED EROSION CONTROL PLANS. INLET BASKETS ARE THE PREFERRED METHOD; STRAW BALES SHALL NOT BE USED.
7. ALL EROSION CONTROL MEASURES SHALL BE INSPECTED WEEKLY, AFTER ANY 0.5 INCH RAINFALL, OR MORE FREQUENTLY AS NECESSARY TO MAINTAIN THEIR FUNCTION.

IDOT EROSION CONTROL NOTES

1. CONTRACTOR TO KEEP PAVEMENT CLEAN OF MUD AND DEBRIS USING SWEEPING/SCRAPING EQUIPMENT TO BE STORED ONSITE.
2. PROVIDE VEHICLE WASHOUT FOR VEHICLES ENTERING THE SITE, LOCATED OUTSIDE OF STATE RIGHT-OF-WAY
3. ANY PARKWAY DAMAGED DURING CONSTRUCTION SHALL BE RESTORED TO EXISTING OR BETTER CONDITIONS WITH 4" TOPSOIL, CLASS 2A SEEDING, EROSION CONTROL BLANKET, AND ALL OTHER APPURTENANCES AS NECESSARY TO COMPLETE WORK IN ACCORDANCE WITH APPROVED PLANS AND APPLICABLE SPECIFICATIONS.

EROSION CONTROL NOTES

1. CONSTRUCTION ENTRANCE SHALL BE LOCATED SO AS TO PROVIDE THE LEAST AMOUNT OF DISTURBANCE TO THE FLOW OF TRAFFIC IN AND OUT OF THE SITE. ADDITIONALLY, CONSTRUCTION ENTRANCE SHALL BE LOCATED TO COINCIDE WITH THE PHASING OF THE PAVEMENT REPLACEMENT.
2. POST CONSTRUCTION STORM WATER POLLUTION CONTROL MEASURES INCLUDE STABILIZATION BY PERMANENT PAVING, DRAINAGE SYSTEM STRUCTURE, OR LANDSCAPING.
3. TEMPORARY AND PERMANENT STABILIZATION PRACTICES AND BMP'S SHALL BE INSTALLED AT THE EARLIEST POSSIBLE TIME DURING THE CONSTRUCTION SEQUENCE. AS AN EXAMPLE, PERIMETER SILT FENCE SHALL BE INSTALLED BEFORE COMMENCEMENT OF ANY GRADING ACTIVITIES. OTHER BMP'S SHALL BE INSTALLED AS SOON AS PRACTICABLE AND SHALL BE MAINTAINED UNTIL FINAL SITE STABILIZATION IS ATTAINED. CONTRACTOR SHALL ALSO REFERENCE CIVIL AND LANDSCAPE PLANS SINCE PERMANENT STABILIZATION IS PROVIDED BY LANDSCAPING, THE BUILDING(S), AND SITE PAVING.
4. BMP'S HAVE BEEN LOCATED AS INDICATED ON THIS PLAN IN ACCORDANCE WITH GENERALLY ACCEPTED ENGINEERING PRACTICES IN ORDER TO MINIMIZE SEDIMENT TRANSFER. FOR EXAMPLE: SILT FENCES LOCATED AT TOE OF SLOPE AND INLET PROTECTION FOR INLETS RECEIVING SEDIMENT FROM SITE RUN-OFF.
5. THE PLACEMENT OF EROSION/SEDIMENTATION CONTROLS SHALL BE IN ACCORDANCE WITH THE APPROVED EROSION AND SEDIMENTATION CONTROL PLAN.
6. ANY MAJOR VARIATION IN MATERIALS OR LOCATIONS OF CONTROLS OR FENCES FROM THOSE SHOWN ON THE APPROVED PLANS WILL REQUIRE A REVISION AND MUST BE APPROVED BY THE REVIEWING ENGINEER, ENVIRONMENTAL SPECIALIST, OR ARBORIST AS APPROPRIATE. MAJOR REVISIONS MUST BE APPROVED BY THE PLANNING AND DEVELOPMENT DEPARTMENT AND THE DRAINAGE UTILITY DEPARTMENT. MINOR CHANGES OR ADDITIONAL CONTROL MEASURES TO BE MADE AS FIELD REVISIONS TO THE EROSION AND SEDIMENTATION CONTROL PLAN MAY BE REQUIRED BY THE ENVIRONMENTAL INSPECTOR DURING THE COURSE OF CONSTRUCTION TO CORRECT CONTROL INADEQUACIES AT NO ADDITIONAL COST TO THE OWNER.
7. CONTRACTOR SHALL PLACE EROSION CONTROL BLANKET (NORTH AMERICAN GREEN S150BN OR APPROVED EQUAL) ON ALL SITE AREAS WITH SLOPES GREATER THAN 4:1, AND IN THE BOTTOM AND SIDE SLOPES OF ALL SWALES.
8. PRIOR TO FINAL ACCEPTANCE, HAUL ROADS AND WATERWAY CROSSINGS CONSTRUCTED FOR TEMPORARY CONTRACTOR ACCESS MUST BE REMOVED, ACCUMULATED SEDIMENT REMOVED FROM THE WATERWAY AND THE AREA RESTORED TO THE ORIGINAL GRADE AND REVEGETATED. ALL LAND CLEARING SHALL BE DISPOSED OF IN APPROVED SPOIL DISPOSAL SITES.
9. PERMANENT, FINAL PLANT COVERING OR STRUCTURES SHALL BE INSTALLED PRIOR TO FINAL ACCEPTANCE.
10. ALL CONTROL DEVICES THAT FUNCTION SIMILARLY TO SILT FENCE OR FIBER ROLLS MUST BE REPAIRED, REPLACED OR SUPPLEMENTED WITH EFFECTIVE CONTROLS WHEN THEY BECOME NONFUNCTIONAL OR THE SEDIMENT REACHES ONE-THIRD THE HEIGHT OF THE DEVICE. THESE REPAIRS MUST BE MADE WITHIN 24 HOURS OF THE RAINFALL EVENT OR AS SOON AS FIELD CONDITIONS ALLOW ACCESS.
11. ALL SEDIMENT DELTAS AND DEPOSITS MUST BE REMOVED FROM SURFACE WATERS, DRAINAGE WAYS, CATCH BASINS AND OTHER DRAINAGE SYSTEMS. ALL AREAS WHERE SEDIMENT REMOVAL RESULTED IN EXPOSED SOIL MUST BE RESTABILIZED. THE REMOVAL AND STABILIZATION MUST TAKE PLACE IMMEDIATELY, BUT NO MORE THAN 7 DAYS AFTER THE RAINFALL EVENT UNLESS PRECLUDED BY LEGAL, REGULATORY OR PHYSICAL ACCESS CONSTRAINTS. ALL REASONABLE EFFORTS MUST BE USED TO OBTAIN ACCESS. ONCE ACCESS IS OBTAINED, REMOVAL AND STABILIZATION MUST TAKE PLACE IMMEDIATELY, BUT NO MORE THAN 7 DAYS LATER. CONTRACTOR IS RESPONSIBLE FOR CONTACTING ALL APPROPRIATE AUTHORITIES AND RECEIVING THE APPLICABLE PERMITS PRIOR TO CONDUCTING ANY WORK.
12. ACCUMULATIONS OF TRACKED AND DEPOSITED SEDIMENT MUST BE REMOVED FROM OFF-SITE PAVED SURFACES WITHIN 24 HOURS OR SOONER IF REQUIRED. SEDIMENT TRACKING MUST BE MINIMIZED BY THE APPROPRIATE MANAGEMENT PRACTICE, LIKE A DEDICATED SITE EXIT WITH AN AGGREGATE SURFACE OR DESIGNATED OFFSITE PARKING AREA. CONTRACTOR IS RESPONSIBLE FOR STREET SWEEPING AND/OR SCRAPING IF YOUR PRACTICES ARE NOT ADEQUATE TO PREVENT SEDIMENT FROM BEING TRACKED FROM THE SITE.
13. SURFACE WATERS, DRAINAGE DITCHES AND CONVEYANCE SYSTEMS MUST BE INSPECTED FOR SEDIMENT DEPOSITS.
14. THE CONTRACTOR SHALL INSTALL AND MAINTAIN ALL EROSION CONTROL MEASURES AS INDICATED ON THIS SHEET IN ACCORDANCE WITH THE STORMWATER POLLUTION PREVENTION PLAN (SWPPP) PREPARED BY KIMLEY-HORN AND ASSOCIATES, INC. THE CONTRACTOR IS RESPONSIBLE FOR IMPLEMENTING THE PROVISIONS INDICATED IN THE SWPPP, INCLUDING EROSION CONTROL MEASURES AND INSPECTION FREQUENCY, AS REQUIRED BY THE IEPA NPDES PHASE II PERMIT PROGRAM REQUIREMENTS.
15. PUMPING SEDIMENT LADEN WATER INTO ANY STORMWATER FACILITY THAT IS NOT DESIGNATED TO BE A SEDIMENT TRAP, DRAINAGEWAY, OR OFFSITE AREA EITHER DIRECTLY OR INDIRECTLY WITHOUT FILTRATION IS PROHIBITED.
16. SOIL STOCKPILES SHALL NOT BE LOCATED IN A DRAINAGEWAY, FLOOD PLAIN AREA OR A DESIGNATED BUFFER, UNLESS OTHERWISE APPROVED, UNDER SPECIFIC CONDITIONS TO BE ESTABLISHED BY THE DIRECTOR OR ADMINISTRATOR.
17. STOCKPILES TO REMAIN IN PLACE FOR MORE THAN THREE DAYS SHALL BE PROVIDED WITH SESC MEASURES. MATERIAL IS TO BE HAULED OFF IMMEDIATELY AND LEGALLY IF NO STOCKPILE IS TO REMAIN IN PLACE.
18. ALL TEMPORARY SESC MEASURES SHALL BE REMOVED WITHIN 30 DAYS AFTER FINAL STABILIZATION IS ACHIEVED.TRAPPED SEDIMENT AND OTHER DISTURBED SOILS RESULTING FROM TEMPORARY MEASURES SHALL BE PROPERLY DISPOSED OF PRIOR TO PERMANENT STABILIZATION.
19. WATER REMOVED FROM TRAPS, BASINS, AND OTHER WATER HOLDING DEPRESSIONS OR EXCAVATIONS MUST FIRST PASS THROUGH A SEDIMENT CONTROL AND/OR FILTRATION DEVICE. WHEN DEWATERING DEVICES ARE USED, DISCHARGE LOCATIONS SHALL BE PROTECTED FROM EROSION.
20. SITE STABILIZATION REQUIREMENTS ARE AS FOLLOWS:
    - 20.1. WHERE THE INITIATION OF STABILIZATION MEASURE BY THE 7TH DAY AFTER CONSTRUCTION ACTIVITY TEMPORARILY OR PERMANENTLY CEASES ON A PORTION OF THE SITE IS PRECLUDED BY SNOW COVER, STABILIZATION MEASURE SHALL BE INITIATED AS SOON AS PRACTICABLE.
    - 20.2. WHERE CONSTRUCTION ACTIVITY WILL RESUME ON A PORTION OF THE SITE WITHIN 14 DAYS FROM WHEN ACTIVITIES CEASED, (E.G. THE TOTAL TIME PERIOD THAT CONSTRUCTION ACTIVITY IS TEMPORARILY CEASED IS LESS THAN 14 DAYS) THEN STABILIZATION MEASURES DO NOT HAVE TO BE INITIATED ON THAT PORTION OF THE SITE BY THE 7TH DAY AFTER CONSTRUCTION ACTIVITY TEMPORARILY CEASED.

NO.	REVISIONS	DATE	BY
1	REVISED PER SITE CHANGES	07/07/25	JTA
2	REVISED PER CITY	05/14/25	JTA
3	REVISED PER CITY	04/10/25	JTA
4	REVISED PER IDOT & CITY	03/07/25	INS
5	REVISED PER CITY	11/26/24	INS

Kimley»Horn

© 2024 KIMLEY-HORN AND ASSOCIATES, INC.
570 LAKE COOK ROAD, SUITE 200
DEERFIELD, IL 60015
PHONE: 847-520-9004
WWW.KIMLEY-HORN.COM

SCALE: AS NOTED
DESIGNED BY: JTA
DRAWN BY: TVC
CHECKED BY: INS

Casey's

CASEY'S NAPERVILLE #6531

20 E. OGDEN AVE
NAPERVILLE, IL 60563

EROSION CONTROL PLAN

ORIGINAL ISSUE: 10/01/2024
KHA PROJECT NO. 168865042
SHEET NUMBER
C-401

Drawing name: K:\CHS_LDEV\168865042_Casey's_6531_Naperville_IL\2 Design\CAD\PlanSheets\C-401 EROSION CONTROL PLAN.dwg C-401 Jul 03, 2025 12:09pm by: JakeAntony
This document, together with the concepts and designs presented herein, as an instrument of service, is intended only for the specific purpose and client for which it was prepared. Reuse of and improper reliance on this document without written authorization and adaptation by Kimley-Horn and Associates, Inc. shall be without liability to Kimley-Horn and Associates, Inc.

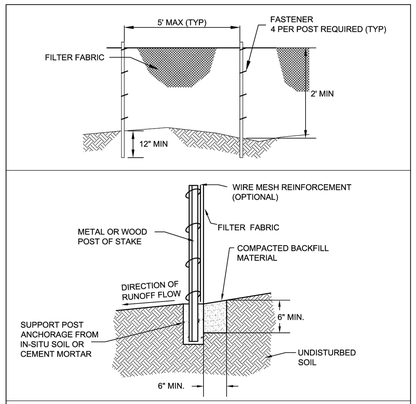

City of Naperville
STANDARD DETAIL

TEMPORARY EROSION CONTROL MEASURE - SILT FENCE

REVISED: 01/01/2013 | SHEET 1 OF 2

LANDSCAPE 3

790.03

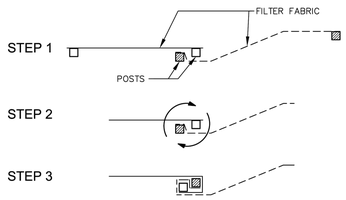

STEPS FOR THE ATTACHMENT OF TWO SILT FENCES:
1. PLACE THE END POST OF THE SECOND FENCE INSIDE THE END POST OF THE FIRST FENCE.
2. ROTATE BOTH POSTS AT LEAST 180 DEGREESIN A CLOCKWISE DIRECTION TO CREATE A TIGHT SEAL WITH THE FABRIC MATERIAL.
3. DRIVE BOTH POSTS A MINIMUM OF 18 INCHES INTO THE GROUND AND BURY THE FLAP.

NOTES:
1. TEMPORARY SILT FENCE SHALL BE INSTALLED PRIOR TO ANY GRADING WORK IN THE AREA TO BE PROTECTED. THEY SHALL BE MAINTAINED THROUGHOUT THE CONSTRUCTION PERIOD AND REMOVED IN CONJUNCTION WITH THE FINAL GRADING AND SITE STABILIZATION.
2. FILTER FABRIC SHALL MEET THE REQUIREMENTS OF MATERIAL SPECIFICATION 592 GEOTEXTILE TABLE 1 OR 2, CLASS I WITH EQUIVALENT OPENING SIZE OF AT LEAST 30 FOR NON-WOVEN OR 50 FOR WOVEN.
3. FENCE POSTS SHALL BE EITHER STANDARD STEEL POST OR WOOD POST WITH A MINIMUM CROSS-SECTIONAL AREA OF 3.0 SQ. IN.
4. DEPENDING UPON THE CONFIGURATION, ATTACH FABRIC AND WIRE MESH WITH HOG RINGS, STEEL POST WITH TIE WIRES, WOOD POST WITH NAILS.

City of Naperville
STANDARD DETAIL

TEMPORARY EROSION CONTROL MEASURE - SILT FENCE

REVISED: 01/01/2013 | SHEET 2 OF 2

LANDSCAPE 3

790.03

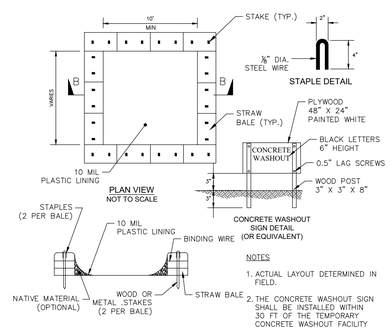

CONCRETE WASHOUT CW

N.T.S.

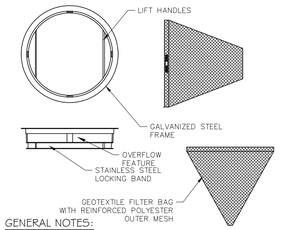

GENERAL NOTES:

ALL PRODUCTS MANUFACTURED BY INLET AND PIPE PROTECTION, INC OR APPROVED EQUAL.

NOTE: INLET FILTERS ARE SLIGHTLY SMALLER THAN THE INLET GRATE SIZES. WHEN IDENTIFYING OR SPECIFYING FILTERS/CASTINGS PLEASE REFER TO THE DIAMETER "D" OR WIDTH "W" AND HEIGHT "H" OF FILTER FRAMES OR CASTING GRATES. YOU MAY ALSO REFER TO OUR CASTING CROSS REFERENCE GUIDE FOR IDOT STANDARDS.

IDOT TYPE 1 ROUND INLET FILTER DEPICTED

NOTE: ROUND AND SQUARE INLET FILTERS AVAILABLE FOR MOST NEENAH AND EAST JORDAN BEEHIVE, ROLL CURB AND CURB BOX FRAME TYPES.

ALL IPP INLET FILTERS TO CONFORM TO IDOT SPECIFICATIONS AS OUTLINED IN ARTICLE 1081.15 OF IDOT'S STANDARD SPECIFICATIONS GUIDE.

INLET PROTECTION IP

N.T.S.

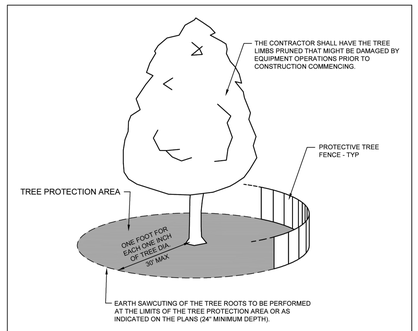

NOTES:

1. A TREE PROTECTION AREA SHALL BE ESTABLISHED AROUND A TREE A DISTANCE OF ONE FOOT FOR EACH ONE INCH OF TREE DIAMETER, UP TO A MAXIMUM OF 30 FEET.
2. PROTECTIVE TREE FENCE SHALL BE INSTALLED AT THE LIMITS OF THE TREE PROTECTION AREA. THE FENCE SHALL BE HIGH ENOUGH SO AS TO BE VISIBLE TO ALL CONSTRUCTION PERSONNEL.
3. GRADE CHANGES, UTILITY TRENCHES, STORAGE OF CONSTRUCTION MATERIAL, DUMPING OF WASTE, OR OPERATION OR STORAGE OF ANY EQUIPMENT SHALL NOT BE ALLOWED WITHIN THE TREE PROTECTION AREA.
4. AUGURING IS REQUIRED IF A UTILITY MUST BE INSTALLED WITHIN THE TREE PROTECTION AREA. AUGURED UTILITIES MUST BE A MINIMUM OF 24 INCHES BELOW GRADE.
5. ALL TREES TO BE SAVED WHICH HAVE BEEN SUBJECTED TO CONSTRUCTION ACTIVITY WITHIN THE TREE PROTECTION AREA SHOULD BE SELECTIVELY THINNED 10% BY AN ARBORIST SKILLED AT THE SELECTIVE THINNING PROCEDURE. NONE OF THE TREES SHALL BE TOPPED, HEADED BACK, SKINNED (REMOVAL OF THE INTERIOR BRANCHES), OR CLIMBED WITH SPIKES. ALL DEAD WOOD SHOULD BE REMOVED TO AVOID HAZARD.
6. IT IS RECOMMENDED THAT FOLLOWING CONSTRUCTION, TREES BE MAINTAINED IN THEIR NATIVE CONDITION. NO LAWN SHOULD BE PLACED AROUND THE TREES. IT IS RECOMMENDED THAT THE AREA BE MULCHED WITH 2 INCHES OF DECOMPOSED LEAVES AND 2 INCHES OF WOOD CHIPS OR BARK.

City of Naperville
STANDARD DETAIL

TREE PROTECTION

REVISED: 08/01/2018 | SHEET 1 OF 1

LANDSCAPE 10

790.10

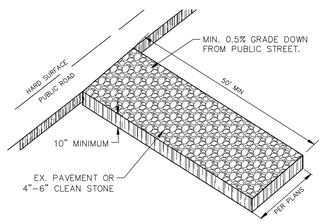

CONSTRUCTION ENTRANCE CE

N.T.S.

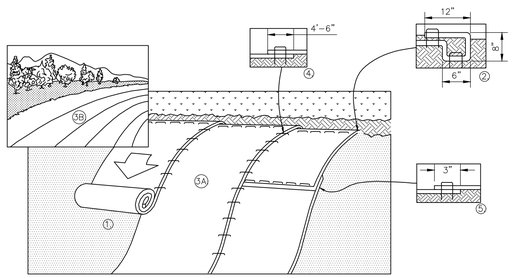

1. PREPARE SOIL BEFORE INSTALLING BLANKETS, INCLUDING ANY NECESSARY APPLICATION OF LIME, FERTILIZER, AND SEED.
2. BEGIN AT THE TOP OF THE SLOPE BY ANCHORING THE BLANKET IN A 6" DEEP X 6" WIDE TRENCH WITH APPROXIMATELY 12" OF BLANKET EXTENDED BEYOND THE UP-SLOPE PORTION OF THE TRENCH AS SHOWN IN DETAIL 2. ANCHOR THE BLANKET WITH A ROW OF STAPLES/STAKES APPROXIMATELY 12" APART IN THE BOTTOM OF THE TRENCH. BACKFILL AND COMPACT THE TRENCH AFTER STAPLING. APPLY SEED TO COMPACTED SOIL AND FOLD REMAINING 12" PORTION OF BLANKET BACK OVER SEED AND COMPACTED SOIL. SECURE BLANKET OVER COMPACTED SOIL WITH A ROW OF STAPLES/STAKES SPACED APPROXIMATELY 12" APART ACROSS THE WIDTH OF THE BLANKET.
3. ROLL THE BLANKETS (A.) DOWN OR (B.) HORIZONTALLY ACROSS THE SLOPE. BLANKETS WILL UNROLL WITH APPROPRIATE SIDE AGAINST THE SOIL SURFACE. ALL BLANKETS MUST BE SECURELY FASTENED TO SOIL SURFACE BY PLACING STAPLES/STAKES IN APPROPRIATE LOCATIONS AS PER MANUFACTURES RECOMMENDATION.
4. THE EDGES OF PARALLEL BLANKETS MUST BE STAPLED WITH MINIMUM 6" OVERLAP. TO ENSURE PROPER SEAM ALIGNMENT, PLACE THE EDGE OF THE OVERLAPPING BLANKET (BLANKET BEING INSTALLED ON TOP) EVEN WITH THE SEAM STITCH ON THE PREVIOUSLY INSTALLED BLANKET.
5. CONSECUTIVE BLANKETS SPLICED DOWN THE SLOPE MUST BE PLACED END OVER END (SHINGLE STYLE) WITH AN APPROXIMATE 3" OVERLAP. STAPLE THROUGH OVERLAPPED AREA, APPROXIMATELY 12" APART ACROSS ENTIRE BLANKET WIDTH.
6. PLACE STAPLES/STAKES PER MANUFACTURER'S RECOMMENDATION FOR THE APPROPRIATE SLOPE BEING APPLIED.

NOTES:
1. IN LOOSE SOIL CONDITIONS, THE USE OF STAPLE OR STAKE LENGTHS GREATER THAN 6" MAY BE NECESSARY TO PROPERLY SECURE THE BLANKETS.
2. FOLLOW EROSION CONTROL TECHNOLOGY COUNCIL SPECIFICATION FOR PRODUCT SELECTION.
3. PERVIOUS LAND WITH SLOPES RUNNING GREATER THAN OR EQUAL TO 4:1 SHALL CONTAIN SLOPE STABILIZATION BLANKET

EROSION CONTROL BLANKET (SLOPE INSTALLATION)

N.T.S.

STABILIZATION TYPE	JAN.	FEB.	MAR.	APR.	MAY	JUNE	JULY	AUG.	SEPT.	OCT.	NOV.	DEC.
PERMANENT SEEDING			A			*	*					
DORMANT SEEDING	B										B	
TEMPORARY SEEDING			C				D					
SODDING			E									
			**									
MULCHING	F											

A KENTUCKY BLUEGRASS 90 LBS/ACRE MIXED WITH PERENNIAL RYEGRASS 30 LBS/ACRE

B KENTUCKY BLUEGRASS 135 LBS/ACRE MIXED WITH PERENNIAL RYEGRASS 45 LBS/ACRE + 2 TONS STRAW MULCH/ACRE

C SPRING OATS 100 LBS/ACRE

D WHEAT OR CEREAL RYE 150 LBS/ACRE

E SOD

F STRAW MULCH 2 TONS/ACRE

* WATERING NEEDED DURING JUNE AND JULY

** WATERING NEEDED FOR 2 TO 3 WEEKS AFTER APPLYING SOD

SEEDING CHART

NO.	REVISIONS	DATE	BY
1	REVISED PER SITE CHANGES	07/07/25	JTA
2	REVISED PER CITY	05/14/25	JTA
3	REVISED PER CITY	04/10/25	JTA
4	REVISED PER IDOT & CITY	03/07/25	INS
5	REVISED PER CITY	11/26/24	INS

Kimley»Horn

© 2024 KIMLEY-HORN AND ASSOCIATES, INC.
570 LAKE COOK ROAD, SUITE 200
DEERFIELD, IL 60015
PHONE: 847-405-2504
WWW.KIMLEY-HORN.COM

SCALE: AS NOTED
DESIGNED BY: JTA
DRAWN BY: TVC
CHECKED BY: INS

Casey's

EROSION CONTROL PLAN DETAILS

CASEY'S NAPERVILLE #6531

20 E. OGDEN AVE
NAPERVILLE, IL 60563

ORIGINAL ISSUE: 10/01/2024

KHA PROJECT NO. 168865042

SHEET NUMBER

C-402

Drawing name: K:\CHS_LDEV\168865042_Casey's_6531_Naperville_IL\2 Design\CAD\PlanSheets\C-401 EROSION CONTROL PLAN.dwg C-402 Jul 03, 2025 12:09pm by: Jake.Antony
This document, together with the concepts and designs presented herein, as an instrument of service, is intended only for the specific purpose and client for which it was prepared. Reuse of and improper reliance on this document without written authorization and adaptation by Kimley-Horn and Associates, Inc. shall be without liability to Kimley-Horn and Associates, Inc.

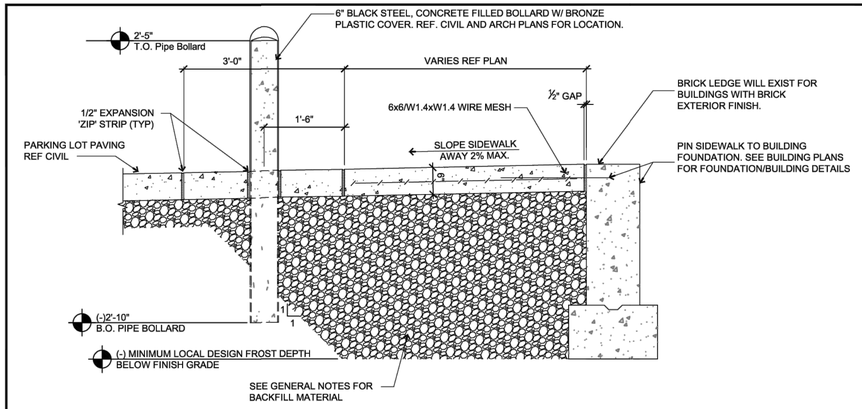

1 TYPICAL BUILDING SIDEWALK AND BOLLARD

3/4" = 1'-0"

SUBGRADE AGGREGATE SECTION TO BE DESIGNED BASED ON SITE SOILS AND USE

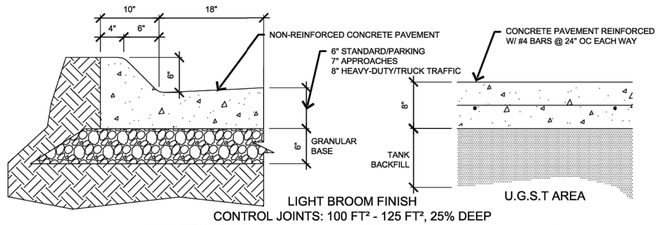

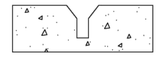

ENLARGED FOR CLARITY

CONTROL JOINTS: 100 FT² - 125 FT², 25% DEEP
CONSTRUCTION JOINTS: PINNED 4' O.C. 12" EACH WAY W/ #4 REBAR
ALL JOINTS TO BE SEALED WITH BACKER RODS AND CAULKED
APPLY CURING AGENT TO ALL EXTERIOR CONCRETE, SEE GENERAL NOTES

2 CONCRETE PAVING AND CURB

Not to Scale

3 PAVING SAW-CUT

Not to Scale

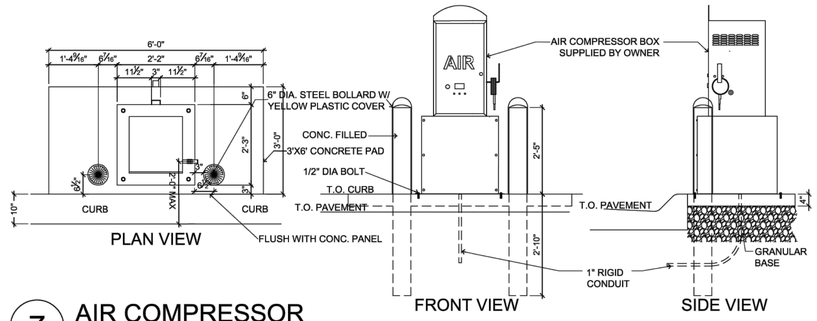

7 AIR COMPRESSOR

1/2" = 1'-0"

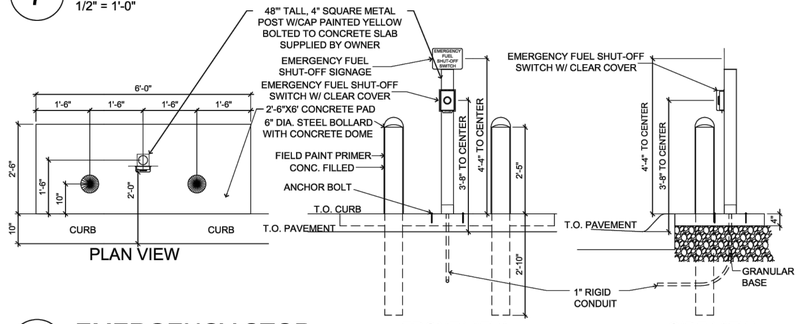

8 EMERGENCY STOP

1/2" = 1'-0"

GENERAL NOTES

Concrete:

1. All concrete and reinforcing work shall conform to the latest edition of the American Concrete Institute's "Standard Building Code Requirements for Reinforced Concrete," (ACI 318) and "Specifications for Structural Concrete for Buildings," (ACI 301).
2. Concrete shall use type II cement. Concrete mix designs shall meet the following requirements:

	MINIMUM 28-DAY f'c	MAXIMUM W/C RATIO	SLUMP	AIR ENTRAIN.
Exterior exposed concrete	4,000 psi	0.42	4" ± 1"	6% ± 1%

   If Contractor desires to increase slump above allowable limits to facilitate placement or pumping, this shall be done utilizing a superplasticizer approved by the Ready Mix Designer at a dosage rate provided by Ready Mix Designer.
3. The Contractor shall reject any concrete that exceeds the slump limits noted above (prior to adding superplasticizer) or concrete that can not be placed within ninety (90) minutes of batch time.
4. No aluminum shall be placed in concrete.
5. All concrete is reinforced unless specifically noted as Unreinforced. Reinforce all concrete not otherwise shown with the same reinforcing as in similar sections or areas.
6. During hot weather (80 degrees F and above), the Contractor shall comply with the recommendations ACI-305 "Hot Weather Concrete". During cold weather (40 degrees and below), the Contractor shall comply with the recommendations of ACI-306 "Cold Weather Concreting".
7. The concrete mix designs are to be submitted as a formal submittal to the Owner for acceptance PRIOR to concrete being delivered to the site.
8. Verify with local authorities the required thickness of poured concrete for approaches and parking lot.
9. Contractor to spray apply 'SpecChem Cure Shield' or 'Certi-Vex Guard Clear AIM' to all exterior concrete surfaces per manufacturer instructions. Use Swissmex DS-8350 Acetone Sprayer, or equivalent. Casey's recommended application rate is 200 sq.ft. per gallon. Contractor to ensure site install is appropriate. Substitute products must be pre-approved by Casey's.

Sub-Base And Aggregate:

1. Sub-base Course Under Exterior Concrete Paved Surfaces: Spread and compact sub-base in 6"-9" lifts compacted to 98% Standard Proctor.
2. Aggregate backfill as follows or approved equal by Casey's:
   - 2.1. Building Slab - 3/4" to 1-1/2" max. clean stone
   - 2.2. Building Sidewalk - 3/4" to 1-1/2" max. clean stone
   - 2.3. Pavement - 1" to 1-1/2" max. stone with fines
   - 2.4. Sidewalk Not Adjacent to Building - Same as pavement
   - 2.5. Tank pit - See QF sheets

Casey's

CASEY'S CONSTRUCTION DIVISION
One Convenience Blvd., Ankeny, IA. 50021 515-965-6100

PROJECT:	PUBLISHED: 07/22/24	DRAWING INFORMATION:
2024 Civil Details	REVISED ON:	CIVIL DETAILS
DRAWING INFORMATION: CONSTRUCTION DIVISION		C-601
DRAWN BY: ARLON GOFORTH III	CHECKED BY:	

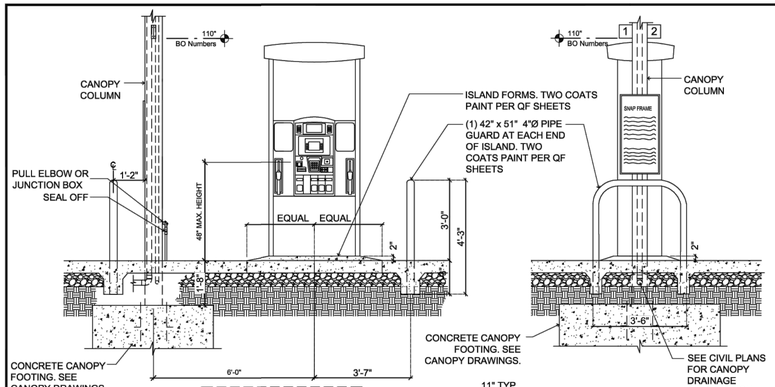

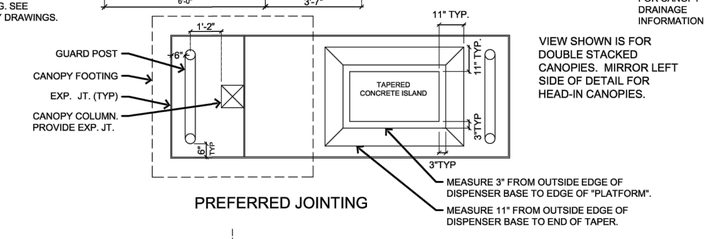

VIEW SHOWN IS FOR DOUBLE STACKED CANOPIES. MIRROR LEFT SIDE OF DETAIL FOR HEAD-IN CANOPIES.

PREFERRED JOINTING

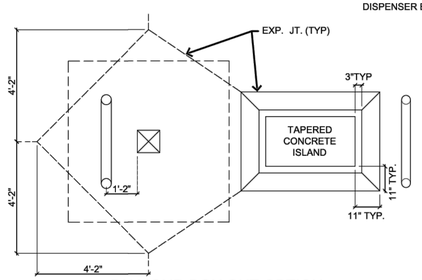

DIAMOND BOX OUT OPTION

1 GAS TAPERED FUEL ISLAND (PREFERRED OPTION)

Not to Scale

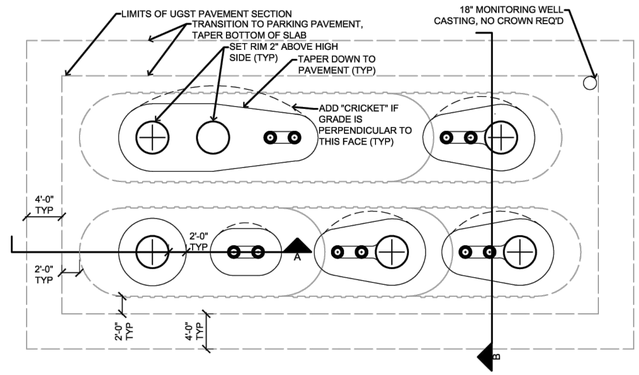

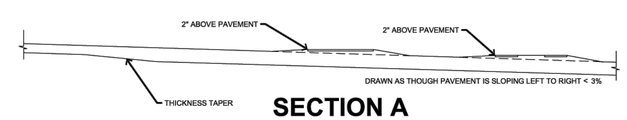

SECTION A

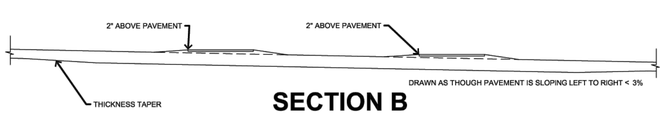

SECTION B

4 UGST PAVING FOR PAVEMENT SLOPE <3%

Not to Scale

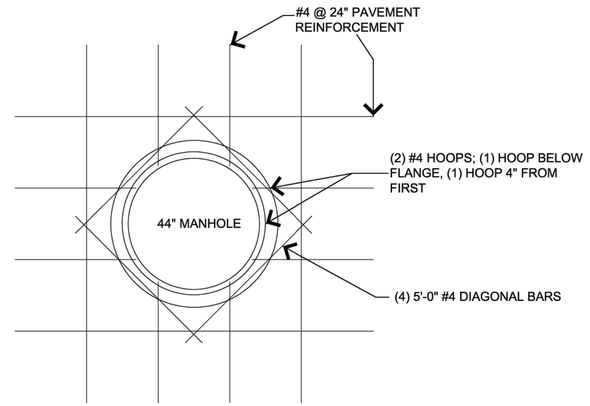

General Notes:

(1) ALL REINFORCING IS CENTER OF SLAB.

6 UGST Manhole Detail

Not to Scale

Casey's

CASEY'S CONSTRUCTION DIVISION
One Convenience Blvd., Ankeny, IA. 50021 515-965-6100

PROJECT: 2024 Civil Details

PLOTTED ON: 07/22/24

REVISED ON:

DRAWING INFORMATION: CONSTRUCTION DIVISION

DRAWN BY: ARLON GOFORTH III

CHECKED BY:

DRAWING INFORMATION: CIVIL DETAILS

C-602

Drawing name: K:\CHS_LDEV\168865042_Casey's_6531_Naperville_IL\2 Design\CAD\PlanSheets\C-600 CONSTRUCTION DETAILS.dwg C-603 Jul 03, 2025 12:11pm by: Jake.Antony
This document, together with the concepts and designs presented herein, as an instrument of service, is intended only for the specific purpose and client for which it was prepared. Reuse of and improper reliance on this document without written authorization and adaptation by Kimley-Horn and Associates, Inc. shall be without liability to Kimley-Horn and Associates, Inc.

WHEN MANHOLE DEPTH IS 12 FT OR LESS T = 8 INCHES
WHEN MANHOLE DEPTH IS OVER 12 FT. T = 10 INCHES

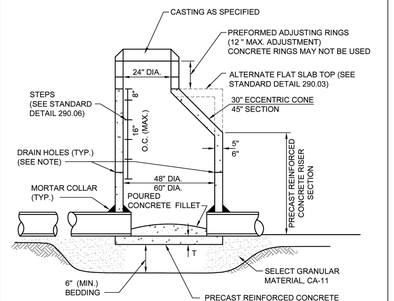

NOTE:

A MINIMUM OF 4 PRECAST OR DRILLED 1" DIAMETER HOLES SHALL BE PROVIDED WITHIN 1' OF THE LOWEST PIPE INVERT. THE HOLES SHALL BE DISTRIBUTED EQUIDISTANT AROUND THE PERIMETER OF THE STRUCTURE. A 1' BY 1' SQUARE OF UNDERDRAIN FILTER CLOTH MATERIAL SHALL BE PLACED OVER EACH DRAIN HOLE ON THE OUTSIDE OF THE STRUCTURE WITH MASTIC MATERIAL TO PREVENT SLIPPAGE DURING BACKFILLING.

City of Naperville STANDARD DETAIL	STORM MANHOLE- TYPE A	STORM 1
	REVISED: 08/01/2018 SHEET 1 OF 1	290.01

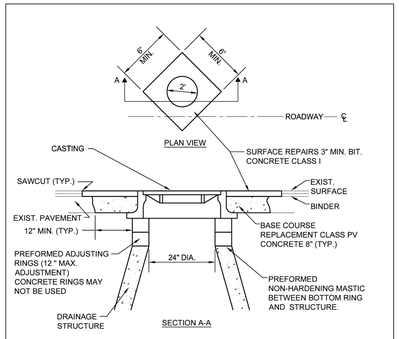

NOTES:

1. ADJUSTMENTS SHALL BE PROTECTED BY A BARRICADE WITH TWO (2) LIGHTS, OR A 1" THICK STEEL PLATE SHALL BE PROVIDED AND MAINTAINED BY THE CONTRACTOR AT LOCATIONS WHERE ADJUSTMENTS ARE LOCATED IN TRAVEL LANES UNTIL THE SURFACE RESTORATION IS COMPLETE. THE PLATE SHALL BE PROTECTED FROM SLIDING AND SHALL HAVE BITUMINOUS RAMPS AS REQUIRED.
2. WHEN ADJUSTMENTS RAISE A CASTING ABOVE THE ELEVATION OF THE EXISTING PAVEMENT SURFACE, A BITUMINOUS MIXTURE SHALL BE PLACED AROUND THE CASTING, TRANSITIONED A DISTANCE OF 1' HORIZONTAL FOR EACH INCH OF VERTICAL DISTANCE ABOVE THE EXISTING PAVEMENT. SUCH RAMPS SHALL BE MAINTAINED BY THE CONTRACTOR UNTIL THE COMPLETION OF THE SURFACE RESTORATION.

City of Naperville STANDARD DETAIL	CASTING ADJUSTMENTS FOR STRUCTURES IN PAVED AREAS	STORM 15
	REVISED: 08/01/2018 SHEET 1 OF 1	290.15

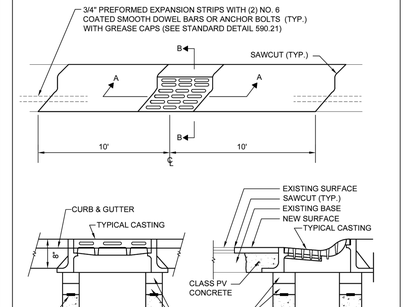

1. REMOVE & REPLACE CURB A MINIMUM OF 10' EITHER SIDE OF STRUCTURE OR TO NEAREST EXPANSION JOINT (WHICHEVER IS CLOSEST)
2. POUR CONCRETE FILLET BETWEEN CASTING AND ADJUSTING RINGS FOR LOCATIONS WHERE THE CASTING IS LARGER THAN THE ADJUSTING RING

City of Naperville STANDARD DETAIL	CASTING ADJUSTMENTS FOR STRUCTURES WITHIN THE CURB LINE	STORM 16
	REVISED: 08/01/2018 SHEET 1 OF 1	290.16

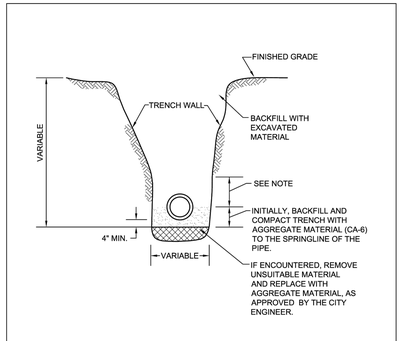

NOTE:

FOR PVC AND HDPE PIPE, BACKFILL WITH AGGREGATE MATERIAL (CA-6) TO 6" ABOVE THE TOP OF PIPE.

City of Naperville STANDARD DETAIL	STORM SEWER TRENCH SECTION IN NON-PAVED AREAS	STORM 21
	REVISED: 01/01/2013 SHEET 1 OF 1	290.21

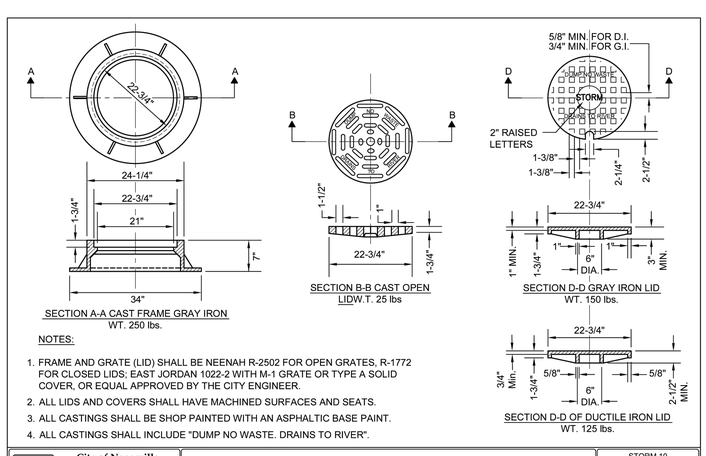

NOTES:

1. FRAME AND GRATE (LID) SHALL BE NEENAH R-2502 FOR OPEN GRATES, R-1772 FOR CLOSED LIDS; EAST JORDAN 1022-2 WITH M-1 GRATE OR TYPE A SOLID COVER, OR EQUAL APPROVED BY THE CITY ENGINEER.
2. ALL LIDS AND COVERS SHALL HAVE MACHINED SURFACES AND SEATS.
3. ALL CASTINGS SHALL BE SHOP PAINTED WITH AN ASPHALTIC BASE PAINT.
4. ALL CASTINGS SHALL INCLUDE "DUMP NO WASTE. DRAINS TO RIVER".

City of Naperville STANDARD DETAIL	FRAME & LID OR GRATE	STORM 10
	REVISED: 05/15/2015 SHEET 1 OF 1	290.10

NOTES:

1. TRENCH BACKFILL MATERIAL SHALL BE COMPACTED IN ACCORDANCE WITH SECTION 550.07 OF THE IDOT STANDARD SPECIFICATIONS FOR ROAD AND BRIDGE CONSTRUCTION.
2. THIS DETAIL SHALL BE USED WHEREVER THE TRENCH IS MADE IN THE PROPOSED ROADWAY SUBGRADE, AND WHEREVER THE INNER EDGE OF THE TRENCH IS CLOSER THAN 2' TO THE EDGE OF THE PROPOSED PAVEMENT, CURB AND GUTTER, AND SIDEWALK.

City of Naperville STANDARD DETAIL	STORM SEWER TRENCH SECTION IN PAVED AREAS	STORM 20
	REVISED: 01/01/2013 SHEET 1 OF 1	290.20

CITY OF NAPERVILLE STORM SEWER NOTES

1. THE FOLLOWING MATERIALS WILL BE PERMITTED FOR STORM SEWER AND PIPE CULVERTS. WHERE A PARTICULAR MATERIAL IS SPECIFIED IN THE PLANS OR SPECIAL PROVISIONS, NO OTHER KIND OF MATERIAL WILL BE PERMITTED:
2. REINFORCED CONCRETE PIPE SHALL CONFORM TO ASTM DESIGNATION C 76, CLASSES I, II, III, IV OR V. BITUMINOUS JOINTS SHALL CONFORM TO ASTM DESIGNATIONS C 14 OR C 76 AS MAY BE APPLICABLE. BITUMINOUS MATERIAL SHALL CONSIST OF A HOMOGENEOUS BLEND OF BITUMEN, INERT FILLER, AND SUITABLE SOLVENT APPROVED BY THE CITY ENGINEER. RUBBER GASKET JOINTS SHALL CONFORM TO ASTM C 433. REINFORCED CONCRETE PIPE SHALL ALSO BE PERMITTED AS ROUND, ELLIPTICAL, OR BOX SHAPED OR AS REINFORCED CONCRETE ARCH CULVERT.
3. NON-REINFORCED CONCRETE PIPE SHALL BE ALLOWED FOR PIPES WITH A 10 INCH OR SMALLER DIAMETER. NON-REINFORCED CONCRETE PIPE SHALL CONFORM TO ASTM DESIGNATION C 14, CLASS 3. BITUMINOUS JOINTS SHALL CONFORM TO ASTM DESIGNATIONS C 14 OR C 76 AS MAY BE APPLICABLE. BITUMINOUS MATERIAL SHALL CONSIST OF A HOMOGENEOUS BLEND OF BITUMEN, INERT FILLER, AND SUITABLE SOLVENT APPROVED BY THE CITY ENGINEER. RUBBER GASKET JOINTS SHALL CONFORM TO ASTM C 433.
4. DUCTILE IRON PIPE SHALL CONFORM TO ANSI A 21.51 (AWWA C-151), CLASS THICKNESS DESIGNED PER ANSI A 21.50 (AWWA C-150), TAR (SEAL) COATED AND CEMENT LINED PER ANSI A 21.4 (AWWA C-104), WITH MECHANICAL OR RUBBER RING (SLIP SEAL OR PUSH ON) JOINTS. ALL DUCTILE IRON PIPE SHALL BE WRAPPED WITH POLYETHYLENE.
5. POLYVINYL CHLORIDE (PVC) PIPE SHALL CONFORM TO ASTM D 3034, TYPE PSM. THE MINIMUM STANDARD DIMENSION RATIO (SDR) SHALL BE 26. THE PIPE SHALL BE MADE OF PVC PLASTIC HAVING A MINIMUM CELL CLASSIFICATION OF 12454-C, AND SHALL HAVE A MINIMUM PIPE STIFFNESS OF FORTY-SIX (46) LBS. PER INCH (317KPA). JOINTS FOR PVC PIPE SHALL BE FLEXIBLE ELASTOMETRIC SEALS PER ASTM D 3212.
6. HIGH-DENSITY POLYETHYLENE (HDPE) PIPE SHALL CONFORM TO THE REQUIREMENTS OF AASHTO M 252 AND M 294. PIPE AND FITTINGS SHALL BE MADE FROM VIRGIN PE COMPOUNDS WHICH CONFORM TO THE REQUIREMENTS OF CELL CLASS 324420C AS DEFINED AND DESCRIBED IN ASTM D 3350. RUBBER GASKET JOINTS SHALL BE USED.
7. FULLY GALVANIZED CORRUGATED STEEL PIPE MAY BE USED FOR RESIDENTIAL DRIVEWAY CROSSINGS ONLY WHEN A DITCH SECTION IS PRESENT. THE MINIMUM CULVERT SIZE IS 12' DIAMETER.
8. BEDDING, OTHER THAN CONCRETE EMBEDMENT, SHALL CONSIST OF GRAVEL, CRUSHED GRAVEL, OR CRUSHED STONE 1/4 INCH TO 1 INCH IN SIZE. AS A MINIMUM, THE MATERIAL SHALL CONFORM TO THE REQUIREMENTS OF IDOT STANDARD SPECIFICATIONS. THE GRADATION SHALL CONFORM TO GRADATION CA-7 OR CA-11 OF THE STANDARD SPECIFICATIONS.
9. BACKFILL MATERIAL SHALL CONFORM TO THE REQUIREMENTS OF IDOT STANDARD SPECIFICATIONS. THE GRADATION SHALL CONFORM TO GRADATION CA-6 OF THE STANDARD SPECIFICATIONS.
10. MAIN CONNECTING DISSIMILAR PIPE MATERIALS SHALL BE MADE WITH SEWER CLAMP NON-SHEAR TYPE COUPLINGS; CASCADE CSS, ROMAC LSS, FERNCO, INC. SHEAR RING, OR APPROVED EQUAL. WHEN AVAILABLE, A STANDARD JOINT WITH A TRANSITION GASKET MAY BE USED. THE NAME OF THE MANUFACTURER, CLASS, AND DATE OF ISSUE SHALL BE CLEARLY IDENTIFIED ON ALL SECTIONS OF PIPE. THE CONTRACTOR SHALL ALSO SUBMIT BILLS OF LADING, OR OTHER QUALITY ASSURANCE DOCUMENTATION WHEN REQUESTED BY THE CITY ENGINEER.
11. MANHOLES FOR STORM SEWERS SHALL HAVE A MINIMUM INSIDE DIAMETER OF 48 INCHES AND SHALL BE CONSTRUCTED OF PRECAST CONCRETE UNITS IN ACCORDANCE WITH ASTM C478-05 (OR LATEST EDITION) AND SHALL CONFORM TO THE CITY OF NAPERVILLE STANDARD DETAIL. ALL MANHOLES SHALL BE WATER-TIGHT. ALL VISIBLE LEAKS SHALL BE SEALED IN A MANNER ACCEPTABLE TO THE CITY ENGINEER.
12. MANHOLES SHALL BE FURNISHED WITH A SELF-SEALING FRAME AND SOLID COVER (EAST JORDAN IRON WORKS 1022 WITH TYPE A SOLID COVER, OR APPROVED EQUAL) WITH THE WORD "STORM" IMPRINTED ON THE COVER IN RAISED LETTERS. ALL FRAMES AND LIDS SHALL MEET OR EXCEED AASHTO H-20 LOADING SPECIFICATIONS. FRAMES SHALL BE SHOP PAINTED WITH ASPHALTIC BASE PAINT. BOTH THE MANHOLE FRAME AND COVER SHALL HAVE MACHINED HORIZONTAL AND VERTICAL BEARING SURFACES. INVERTED MANHOLE FRAMES ARE NOT ALLOWED. PICK HOLES SHALL NOT CREATE OPENINGS IN THE MANHOLE COVER.
13. MANHOLE STEPS ON MAXIMUM 16 INCH CENTER SHALL BE FURNISHED WITH EACH MANHOLE, SECURELY ANCHORED IN PLACE, TRUE TO VERTICAL ALIGNMENT, IN ACCORDANCE WITH THE NAPERVILLE STANDARD DETAILS. STEPS SHALL BE COPOLYMER POLYPROPYLENE REINFORCED WITH 1/2 INCH A615/A615M-05A (OR LATEST EDITION) GRADE 60 STEEL REINFORCEMENT, MEETING OR EXCEEDING ASTM C 478-05 (OR LATEST EDITION) AND OSHA STANDARDS.
14. CATCH BASINS AND INLETS SHALL HAVE A MINIMUM INSIDE DIAMETER OF 24 INCHES AND SHALL BE CONSTRUCTED OF PRECAST CONCRETE UNITS IN ACCORDANCE WITH ASTM C478-05 (OR LATEST EDITION) AND SHALL CONFORM TO THE CITY OF NAPERVILLE STANDARD DETAIL. ALL CATCH BASINS AND INLETS SHALL BE WATER-TIGHT AT ALL POINTS BELOW GRADE. ALL VISIBLE LEAKS SHALL BE SEALED IN A MANNER ACCEPTABLE TO THE CITY ENGINEER.CATCH BASINS AND INLETS SHALL BE FURNISHED WITH A FRAME AND GRATE BASED UPON THE LOCATION OF THE INSTALLATION AS LISTED BELOW. ALL FRAMES AND GRATES SHALL MEET OR EXCEED AASHTO H-20 LOADING SPECIFICATIONS. FRAMES SHALL BE SHOP PAINTED WITH ASPHALTIC BASE PAINT. ALL STORM SEWER LIDS AND GRATES SHALL BE CAST WITH 'DUMP NO WASTE. DRAINS TO RIVER.'
    14.1. PAVEMENT: EAST JORDAN IRON WORKS 1022 FRAME WITH TYPE M1 RADIAL FLAT GRATE, OR APPROVED EQUAL.
    14.2. BARRIER CURB AND GUTTER: EAST JORDAN IRON WORKS 7220 FRAME WITH TYPE M1 GRATE AND T1 CURB BOX, OR APPROVED EQUAL.
    14.3. DEPRESSED CURB: EAST JORDAN IRON WORKS 5120 FRAME AND GRATE, OR APPROVED EQUAL.
    14.4. MOUNTABLE CURB: EAST JORDAN IRON WORKS 7525 FRAME AND GRATE, OR APPROVED EQUAL.
    14.5. NON-PAVED AREAS: EAST JORDAN IRON WORKS 6527 BEEHIVE GRATE, OR APPROVED EQUAL. ALTERNATELY, IN AREAS WHERE THERE IS THE LIKELIHOOD OF PEDESTRIAN TRAFFIC, EAST JORDAN IRON WORKS 1022 FRAME WITH TYPE M1 RADIAL FLAT GRATE, OR APPROVED EQUAL MAY BE USED.
15. ALL STEEL CASING PIPE SHALL BE BITUMINOUS COATED, A MINIMUM OF 30 MILS THICKNESS INSIDE AND OUT, SHALL BE OF LEAK PROOF CONSTRUCTION AND CAPABLE OF WITHSTANDING THE ANTICIPATED LOADINGS. THE MINIMUM WALL THICKNESS FOR THE CASING PIPE SHALL BE IN ACCORDANCE WITH TABLE 200-1. THE STEEL CASING PIPE SHALL HAVE MINIMUM YIELD STRENGTH OF 35,000 PSI AND SHALL MEET THE REQUIREMENTS OF A139/A139M-04 (OR LATEST EDITION), GRADE B. RING DEFLECTION SHALL NOT EXCEED 2% OF THE NOMINAL DIAMETER. THE STEEL CASING PIPE SHALL BE DELIVERED TO THE JOBSITE WITH BEVELED ENDS TO FACILITATE FIELD WELDING.
16. ALL PIPE SHALL BE LAID TRUE TO LINE AND GRADE. DIRT AND OTHER FOREIGN MATERIAL SHALL BE PREVENTED FROM ENTERING THE PIPE OR PIPE JOINT DURING HANDLING OR LAYING OPERATIONS.ALL STORM SEWER PIPE TO PIPE CONNECTIONS SHALL BE SEALED WITH BUTYL MASTIC TO ENSURE WATER TIGHTNESS. LIFT HOLES ARE TO BE SEALED USING BUTYL MASTIC AND CONCRETE PLUGS. AT NO TIME SHALL CONNECTIONS BETWEEN THE STORM SEWER SYSTEM AND SANITARY SEWER SYSTEMS BE ALLOWED. ALTERNATELY, PREMIUM JOINT PIPE WITH INTEGRAL O-RINGS MAY BE USED.
17. FOR STRUCTURES LOCATED IN PAVED AREAS, A MINIMUM OF FOUR, 2 INCH DIAMETER HOLES SHALL BE DRILLED OR PRECAST INTO THE STRUCTURE WITHIN 1 FOOT OF THE LOWEST PIPE INVERT. THE HOLES SHALL BE DISTRIBUTED EQUIDISTANT AROUND THE PERIMETER OF THE STRUCTURE. A ONE (1) FOOT BY ONE (1) FOOT SECTION OF UNDERDRAIN FILTER CLOTH MATERIAL SHALL BE SUFFICIENTLY FIXED TO THE OUTSIDE OF THE MANHOLE WITH MASTIC MATERIALS TO PREVENT SLIPPAGE DURING BACKFILLING.
18. ALL STORM SEWER STRUCTURE FRAMES WITHOUT INSIDE FLANGES SHALL BE SHAPED WITH HYDRAULIC CEMENT OR ELASTOMERIC JOINT SEALANT TO FORM A FILLET TO THE STRUCTURE OR ADJUSTING RINGS AND TO MAINTAIN WATER-TIGHTNESS. FRAME ADJUSTMENTS SHALL BE COMPLETED IN ACCORDANCE WITH SECTIONS 602 AND 603 OF STANDARD SPECIFICATIONS FOR ROAD AND BRIDGE CONSTRUCTION, PREPARED BY THE ILLINOIS DEPARTMENT OF TRANSPORTATION, LATEST EDITION, EXCEPT AS NOTED HEREIN.

CITY OF NAPERVILLE GENERAL NOTES

1. THE OWNER OR HIS/HER/THEIR REPRESENTATIVE IS RESPONSIBLE TO OBTAIN ANY AND ALL PERMITS REQUIRED BY APPLICABLE GOVERNMENT AGENCIES.
2. ALL WORK SHALL BE PERFORMED IN ACCORDANCE WITH THE CITY OF NAPERVILLE DESIGN MANUAL AND STANDARD SPECIFICATIONS (CURRENT EDITION) AND WITH THE ILLINOIS DEPARTMENT OF TRANSPORTATIONS "STANDARD SPECIFICATIONS FOR ROAD AND BRIDGE CONSTRUCTION" (CURRENT EDITION).
3. ALL CONTRACTORS DOING WORK IN PUBLIC RIGHT-OF-WAY MUST BE LICENSED (WHEN APPLICABLE) TO MAKE PUBLIC IMPROVEMENTS WITHIN THE NAPERVILLE CORPORATE LIMITS.
4. THE CONTRACTOR/DEVELOPER ASSUMES ALL RESPONSIBILITY AND LIABILITY FOR ANY ACTION RESULTING FROM THEIR WORK WITHIN THE PUBLIC RIGHT-OF-WAY.
5. THE CONTRACTOR/DEVELOPER SHALL INDEMNIFY AND HOLD HARMLESS THE CITY OF NAPERVILLE.
6. PRIOR TO COMMENCEMENT OF ANY OFF-SITE CONSTRUCTION, THE CONTRACTOR SHALL SECURE WRITTEN AUTHORIZATION THAT ALL OFF-SITE EASEMENTS HAVE BEEN SECURED AND THAT PERMISSION HAS BEEN GRANTED TO ENTER ONTO PRIVATE PROPERTY.
7. THE CONTRACTOR AND THEIR ON-SITE REPRESENTATIVES WILL BE REQUIRED TO ATTEND A PRE-CONSTRUCTION MEETING WITH THE CITY OF NAPERVILLE PRIOR TO ANY WORK BEING STARTED. A PRE-CONSTRUCTION MEETING WILL NOT BE SCHEDULED UNTIL THE PROJECT HAS BEEN APPROVED BY THE CITY OF NAPERVILLE DEVELOPMENT REVIEW TEAM AND THE REQUIRED SURETY HAS BEEN POSTED.
8. A MINIMUM OF 48 HOURS NOTICE SHALL BE GIVEN TO THE CITY OF NAPERVILLE TED BUSINESS GROUP (630-420-6100 OPTION 1) PRIOR TO STARTING WORK OR RESTARTING WORK AFTER SOME ABSENCE OF WORK FOR ANY REASON.
9. IT SHALL BE THE CONTRACTORS RESPONSIBILITY TO ADEQUATELY IDENTIFY AND LOCATE ALL EXISTING UTILITIES PRIOR TO EXCAVATION. BEFORE STARTING CONSTRUCTION, THE CONTRACTOR SHALL CONTACT JULIE FOR THE LOCATION OF ANY AND ALL UTILITIES. THE TOLL-FREE NUMBER IS 800-892-0123. IT IS THE RESPONSIBILITY OF THE CONTRACTOR TO LOCATE ANY PRIVATE FACILITIES OR NON-JULIE MEMBER FACILITIES.
10. THE CONTRACTOR CAN SCHEDULE ALL NECESSARY SITE INSPECTIONS WITH THE CITY OF NAPERVILLE BY CALLING (630-420-6100 OPTION 1) BETWEEN THE HOURS OF 8:00AM AND 4:00PM (CLOSED 1:00PM TO 2:00PM DAILY) ON WEEKDAYS WHEN THE CITY IS OPEN FOR BUSINESS. THE CONTRACTOR WILL BE REQUIRED TO PROVIDE THE SITE PERMIT NUMBER FOR THE PROJECT IN ORDER TO SCHEDULE THE INSPECTION(S).
11. RECORD DRAWINGS ARE REQUIRED TO BE SUBMITTED AND APPROVED BY THE CITY OF NAPERVILLE PRIOR TO FINAL OCCUPANCY BEING GRANTED.
12. FINAL ACCEPTANCE OF PUBLIC IMPROVEMENTS SHALL BE GRANTED ONLY AFTER A FINAL INSEPCTION HAS BEEN COMPLETED AND HAS REVEALED THAT ALL IMPROVEMENTS HAVE BEEN SATISFACTORILY COMPLETED IN ACCORDANCE WITH THE NAPERVILLE STANDARD SPECIFICATIONS. UTILITIES ARE NOT CONSIDERED ACCEPTED UNTIL THEY ARE FORMALLY ACCEPTED BY THE CITY COUNCIL AS REQUIRED IN ACCORDANCE WITH THE NAPERVILLE MUNICIPAL CODE.

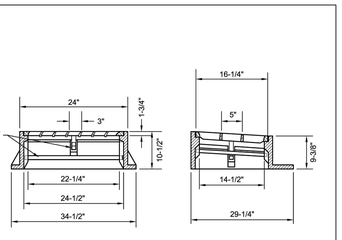

CAST FRAME AND GRATE

NOTES:

1. FRAME AND GRATE SHALL BE NEENAH R-3525-L, EAST JORDAN 5120, OR EQUAL APPROVED BY THE CITY ENGINEER.
2. ALL CASTING SHALL BE SHOP PAINTED WITH AN ASPHALTIC BASE PAINT.
3. ALL CASTINGS SHALL INCLUDE "DUMP NO WASTE. DRAINS TO RIVER".

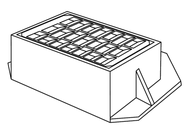

City of Naperville STANDARD DETAIL	FRAME & GRATE FOR B-6.12 CURB & GUTTER (DEPRESSED)	STORM 12
	REVISED: 05/15/2015 SHEET 1 OF 1	290.12

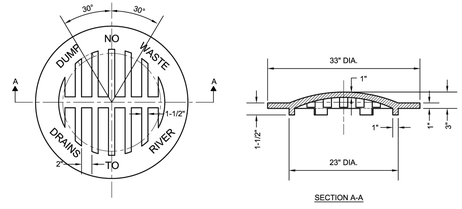

NOTES:

1. BEEHIVE GRATE SHALL BE NEENAH R4340B, EAST JORDAN 6527, OR EQUAL APPROVED BY THE CITY ENGINEER.
2. ALL CASTINGS SHALL BE SHOP PAINTED WITH AN ASPHALTIC BASE PAINT.
3. ALL CASTINGS SHALL INCLUDE "DUMP NO WASTE. DRAINS TO RIVER".

City of Naperville STANDARD DETAIL	BEEHIVE GRATE	STORM 14
	REVISED: 05/15/2015 SHEET 1 OF 1	290.14

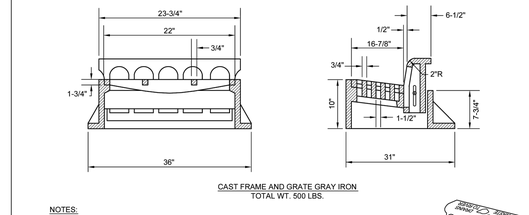

CAST FRAME AND GRATE GRAY IRON
TOTAL WT. 500 LBS.

NOTES:

1. FRAME AND GRATE SHALL BE NEENAH R-3278-A, EAST JORDAN IRON 7220, OR EQUAL APPROVED BY THE CITY ENGINEER.
2. ALL CASTING SHALL BE SHOP PAINTED WITH AN ASPHALTIC BASE PAINT.
3. SEE STANDARD DETAIL 590.20 FOR CORRESPONDING CURB.
4. ALL CASTINGS SHALL INCLUDE "DUMP NO WASTE. DRAINS TO RIVER".



City of Naperville STANDARD DETAIL	FRAME & GRATE FOR B-6.12 CURB & GUTTER	STORM 11
	REVISED: 05/15/2015 SHEET 1 OF 1	290.11

NO.	REVISIONS	DATE	BY
1	REVISED PER SITE CHANGES	07/07/25	JTA
2	REVISED PER CITY	05/14/25	JTA
3	REVISED PER IDOT & CITY	04/10/25	JTA
4	REVISED PER CITY	03/07/25	INS
5		11/26/24	INS

Kimley»Horn
© 2024 KIMLEY-HORN AND ASSOCIATES, INC.
570 LAKE COOK ROAD, SUITE 200
DEERFIELD, IL 60015
PHONE: 847-520-9504
WWW.KIMLEY-HORN.COM

SCALE: AS NOTED
DESIGNED BY: JTA
DRAWN BY: TVC
CHECKED BY: INS

Casey's

CONSTRUCTION DETAILS - STORM SEWER

CASEY'S NAPERVILLE #6531
20 E. OGDEN AVE
NAPERVILLE, IL 60563

ORIGINAL ISSUE: 10/01/2024
KHA PROJECT NO. 168865042
SHEET NUMBER
C-603

Drawing name: K:\CHS_LDEV\168865042_Casey's_6531_Naperville_IL\2 Design\CAD\FinSheets\C-600 CONSTRUCTION DETAILS.dwg C-604 Jul 03, 2025 12:13pm by: Jake.Antony
This document, together with the concepts and designs presented herein, as an instrument of service, is intended only for the specific purpose and client for which it was prepared. Reuse of and improper reliance on this document without written authorization and adaptation by Kimley-Horn and Associates, Inc. shall be without liability to Kimley-Horn and Associates, Inc.

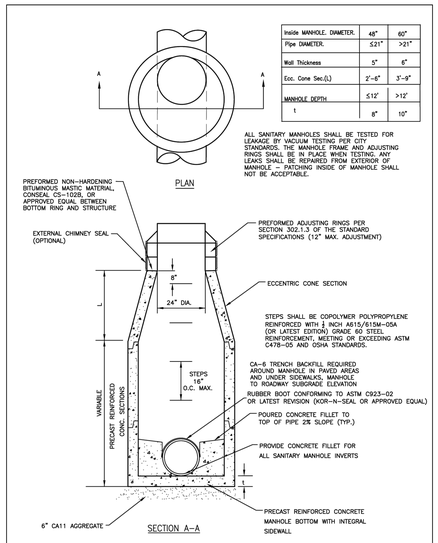

Inside MANHOLE. DIAMETER.	48"	60"
Pipe DIAMETER.	≤21"	>21"
Wall Thickness	5"	6"
Ecc. Cone Sec.(L)	2'–6"	3'–9"
MANHOLE DEPTH	≤12'	>12'
t	8"	10"

ALL SANITARY MANHOLES SHALL BE TESTED FOR LEAKAGE BY VACUUM TESTING PER CITY STANDARDS. THE MANHOLE FRAME AND ADJUSTING RINGS SHALL BE IN PLACE WHEN TESTING. ANY LEAKS SHALL BE REPAIRED FROM EXTERIOR OF MANHOLE – PATCHING INSIDE OF MANHOLE SHALL NOT BE ACCEPTABLE.

City of Naperville STANDARD DETAIL

SANITARY SEWER MANHOLE

REVISED: 08/01/2018 | SHEET 1 OF 1

SANITARY 1

390.01

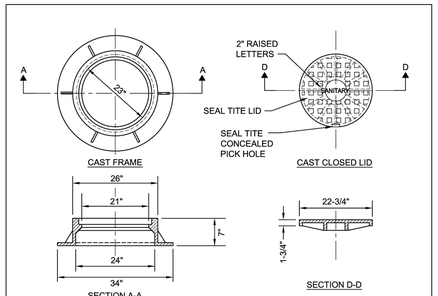

NOTES:

1) DUCTILE IRON SHALL BE GRADE 65-45-12 AND SHALL BE TESTED IN ACCORDANCE WITH FEDERAL SPECIFICATIONS.

2) ALL FRAMES AND COVERS SHALL HAVE MACHINED HORIZONTAL AND VERTICAL BEARING SURFACES. PICK HOLES SHALL NOT CREATE OPENINGS IN THE COVER.

3) THE MANHOLE COVERS SHALL HAVE 2" RAISED LETTERS AS SHOWN.

4) ALTERNATIVE TO DUCTILE IRON LID, GREY IRON CL 35 LID MAY BE USED.

5) CASTINGS ARE SHALL BE EAST JORDAN 1022-Z3; NEENAH R-1772 OR APPROVED EQUAL.

6) WATERPROOF, BOLTDOWN FRAME AND COVER SHALL BE USED IN FLOOD PLAIN AREA, AND AS NOTED ON THE PLANS. NEENAH R-1916-F1, EAST JORDAN IRON WORKS 1022-Z1PT OR APPROVED EQUAL.

7. LIDS AND FRAMES TO MEET ASSHTO M306 PROOF LOADING SPECIFICATIONS

City of Naperville STANDARD DETAIL

SANITARY MANHOLE - FRAME & COVER

REVISED: 01/01/2013 | SHEET 1 OF 1

SANITARY 6

390.06

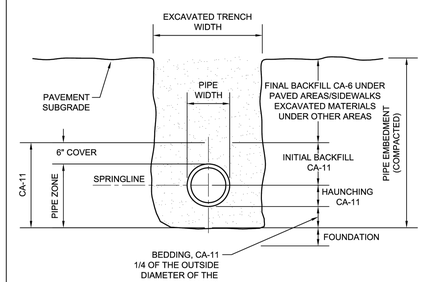

NOTES:

1. IN PAVED AREAS, ALL TRENCHES MUST BE COMPACTED IN CONFORMANCE WITH SECTION 550.07 OF THE IDOT STANDARD SPECIFICATIONS FOR ROAD & BRIDGE CONSTRUCTION.
2. IF FOUNDATION IS UNSUITABLE TO BED PIPE, UNDERCUTS MAY BE REQUIRED AS DIRECTED BY THE ENGINEER.

City of Naperville STANDARD DETAIL

TRENCH SECTION FOR PVC PIPE

REVISED: 01/01/2013 | SHEET 1 OF 1

SANITARY 10

390.10

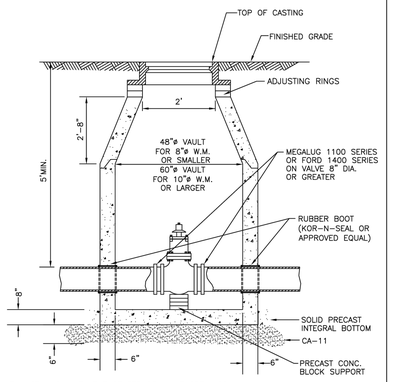

1. VALVE MUST ALIGN WITH THE CENTER OF VAULT OPENINGS.
2. CONCENTRIC CONES TO BE USED FOR VALVES 12" AND SMALLER.
3. VALVES SHALL BE RESILIENT WEDGE GATE VALVES WITH MECHANICAL JOINT ENDS TO COMPLY WITH ANSI/AWWA C515–09 OR LATEST VERSION VALVES TO BE CLOW, AMERICAN, WATEROUS, KENNEDY OR APPROVED EQUAL.
4. ALL RINGS SHALL BE HIGH DENSITY POLYETHYLENE PLASTIC (HDPE), RECYCLED RUBBER, HIGH DENSITY EXPANDING POLYSTYRENE, EXPANDED POLYPROPYLENE (EPP), OR OTHER MATERIAL AS APPROVED BY THE CITY ENGINEER. PRECAST CONCRETE RINGS, BRICKS, ROCKS, SHIMS, OR CONCRETE BLOCKS WILL NOT BE ALLOWED. TAPERED ADJUSTING RINGS SHALL BE REQUIRED WHEN THE FRAME WILL NEED TO MATCH THE SLOPE OF THE ROADWAY.

City of Naperville STANDARD DETAIL

VALVE VAULT

REVISED: 10/03/2023 | SHEET 1 OF 1

WATER 1

490.01

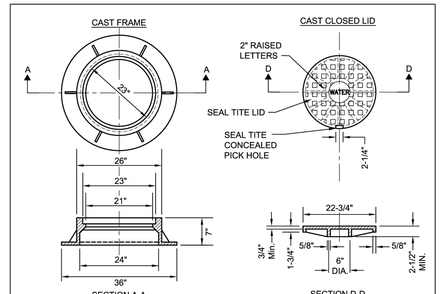

NOTES:

1. DUCTILE IRON SHALL BE GRADE 65-45-12 AND SHALL BE TESTED IN ACCORDANCE WITH FEDERAL SPECIFICATIONS.
2. ALL FRAMES AND COVERS SHALL HAVE MACHINED HORIZONTAL AND VERTICAL BEARING SURFACES. PICK HOLES SHALL NOT CREATE OPENINGS IN THE COVER.
3. THE MANHOLE COVERS SHALL HAVE RAISED LETTERS AS SHOWN.
4. ALTERNATIVE TO DUCTILE IRON LID, GREY IRON CL 35 LID MAY BE USED.
5. DIMENSIONS FOR CASTINGS ARE COMPARABLE TO EAST JORDAN 1022 OR NEENAH R-1772-C, HEAVY DUTY.
6. LIDS AND FRAMES TO MEET AASHTO M306 PROOF LOADING SPECIFICATIONS.

City of Naperville STANDARD DETAIL

VALVE VAULT - FRAME & COVER

REVISED: 01/01/2013 | SHEET 1 OF 1

WATER 4

490.04

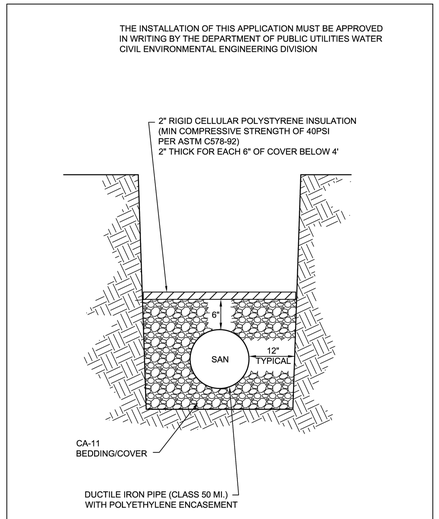

City of Naperville STANDARD DETAIL

SANITARY SEWER PIPE INSULATION

REVISED: 01/01/2013 | SHEET 1 OF 1

SANITARY 22

390.22

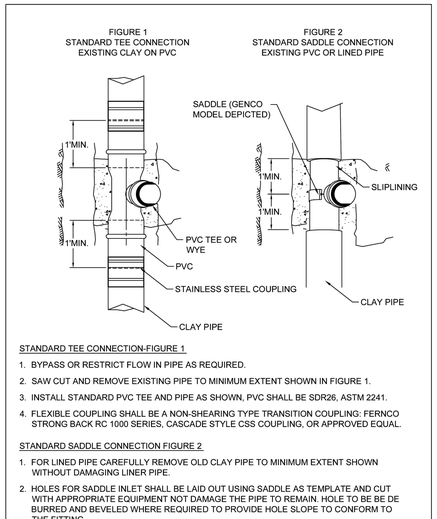

STANDARD TEE CONNECTION-FIGURE 1

1. BYPASS OR RESTRICT FLOW IN PIPE AS REQUIRED.
2. SAW CUT AND REMOVE EXISTING PIPE TO MINIMUM EXTENT SHOWN IN FIGURE 1.
3. INSTALL STANDARD PVC TEE AND PIPE AS SHOWN, PVC SHALL BE SDR26, ASTM 2241.
4. FLEXIBLE COUPLING SHALL BE A NON-SHEARING TYPE TRANSITION COUPLING: FERNCO STRONG BACK RC 1000 SERIES, CASCADE STYLE CSS COUPLING, OR APPROVED EQUAL.

STANDARD SADDLE CONNECTION FIGURE 2

1. FOR LINED PIPE CAREFULLY REMOVE OLD CLAY PIPE TO MINIMUM EXTENT SHOWN WITHOUT DAMAGING LINER PIPE.
2. HOLES FOR SADDLE INLET SHALL BE LAID OUT USING SADDLE AS TEMPLATE AND CUT WITH APPROPRIATE EQUIPMENT NOT DAMAGE THE PIPE TO REMAIN. HOLE TO BE BE DE BURRED AND BEVELED WHERE REQUIRED TO PROVIDE HOLE SLOPE TO CONFORM TO THE FITTING.
3. SADDLE SHALL BE SEALTITE TEE "U" MODEL 40 BY GENCO, CASCADE STYLE CSWRY OR CSWRT, OR APPROVED EQUAL.

City of Naperville STANDARD DETAIL

SANITARY SEWER SERVICE CONNECTION

REVISED: 08/01/2018 | SHEET 1 OF 1

SANITARY 21

390.21

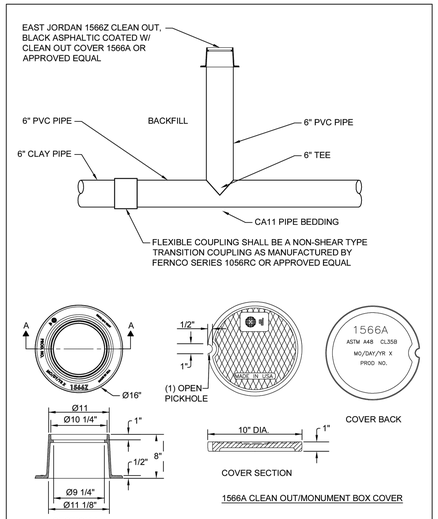

City of Naperville STANDARD DETAIL

SANITARY SEWER CLEANOUT

REVISED: 10/04/2023 | SHEET 1 OF 1

SANITARY 23

390.23

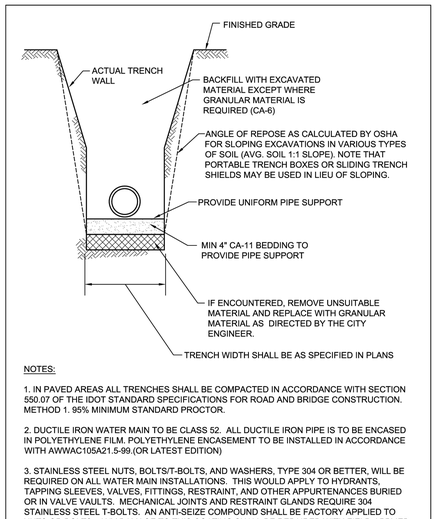

NOTES:

1. IN PAVED AREAS ALL TRENCHES SHALL BE COMPACTED IN ACCORDANCE WITH SECTION 550.07 OF THE IDOT STANDARD SPECIFICATIONS FOR ROAD AND BRIDGE CONSTRUCTION. METHOD 1. 95% MINIMUM STANDARD PROCTOR.
2. DUCTILE IRON WATER MAIN TO BE CLASS 52. ALL DUCTILE IRON PIPE IS TO BE ENCASED IN POLYETHYLENE FILM. POLYETHYLENE ENCASEMENT TO BE INSTALLED IN ACCORDANCE WITH AWWAC105A21.5-99.(OR LATEST EDITION)
3. STAINLESS STEEL NUTS, BOLTS/T-BOLTS, AND WASHERS, TYPE 304 OR BETTER, WILL BE REQUIRED ON ALL WATER MAIN INSTALLATIONS. THIS WOULD APPLY TO HYDRANTS, TAPPING SLEEVES, VALVES, FITTINGS, RESTRAINT, AND OTHER APPURTENANCES BURIED OR IN VALVE VAULTS. MECHANICAL JOINTS AND RESTRAINT GLANDS REQUIRE 304 STAINLESS STEEL T-BOLTS. AN ANTI-SEIZE COMPOUND SHALL BE FACTORY APPLIED TO NUTS OR BOLTS - ANY DAMAGE TO THIS COATING SHALL BE REPAIRED WITH FIELD-APPLIED, APPROVED ANTI-SEIZE COMPOUND THAT IS A MOLYBDENUM-BASE LUBRICANT, BOSTIK NEVER-SEEZ OR APPROVED EQUAL.

City of Naperville STANDARD DETAIL

WATER MAIN TRENCH SECTION

REVISED: 01/01/2013 | SHEET 1 OF 1

WATER 10

490.10

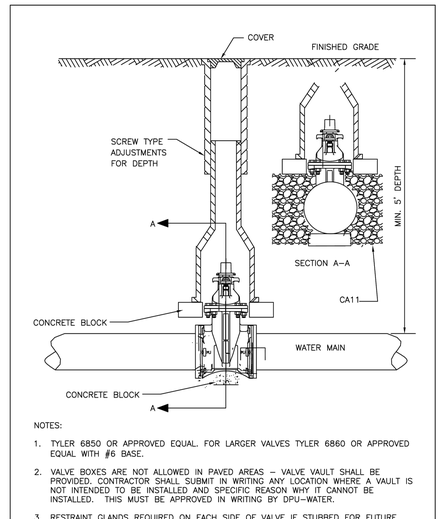

NOTES:

1. TYLER 6850 OR APPROVED EQUAL. FOR LARGER VALVES TYLER 6860 OR APPROVED EQUAL WITH #6 BASE.
2. VALVE BOXES ARE NOT ALLOWED IN PAVED AREAS – VALVE VAULT SHALL BE PROVIDED. CONTRACTOR SHALL SUBMIT IN WRITING ANY LOCATION WHERE A VAULT IS NOT INTENDED TO BE INSTALLED AND SPECIFIC REASON WHY IT CANNOT BE INSTALLED. THIS MUST BE APPROVED IN WRITING BY DPU–WATER.
3. RESTRAINT GLANDS REQUIRED ON EACH SIDE OF VALVE IF STUBBED FOR FUTURE CONNECTION OR PIPE BEND WITHIN TWO PIPE LENGTHS OF VALVE.

City of Naperville STANDARD DETAIL

VALVE BOX

REVISED: 01/01/2013 | SHEET 1 OF 1

WATER 5

490.05

NO.	REVISIONS	DATE	BY
1	REVISED PER SITE CHANGES	07/07/25	JTA
2	REVISED PER CITY	05/14/25	JTA
3	REVISED PER CITY	04/10/25	JTA
4	REVISED PER IDOT & CITY	03/07/25	INS
5	REVISED PER CITY	11/26/24	INS

Kimley»Horn

© 2024 KIMLEY-HORN AND ASSOCIATES, INC.

570 LAKE COOK ROAD, SUITE 200
DEERFIELD, IL 60015
PHONE: 847-520-9200
WWW.KIMLEY-HORN.COM

SCALE: AS NOTED
DESIGNED BY: JTA
DRAWN BY: TVC
CHECKED BY: INS

Casey's

CONSTRUCTION DETAILS - SANITARY & WATERMAIN

CASEY'S NAPERVILLE #6531

20 E. OGDEN AVE
NAPERVILLE, IL 60563

ORIGINAL ISSUE: 10/01/2024

KHA PROJECT NO. 168865042

SHEET NUMBER

C-604

Drawing name: K:\CHS_LDEV\168865042_Casey's_6531_Naperville_IL\2 Design\CAD\PlanSheets\C-600 CONSTRUCTION DETAILS.dwg C-605 Jul 03, 2025 12:15pm by: JoseAntony
This document, together with the concepts and designs presented herein, as an instrument of service, is intended only for the specific purpose and client for which it was prepared. Reuse of and improper reliance on this document without written authorization and adaptation by Kimley-Horn and Associates, Inc. shall be without liability to Kimley-Horn and Associates, Inc.

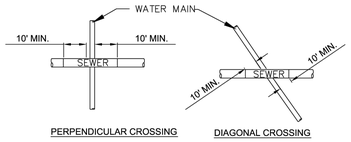

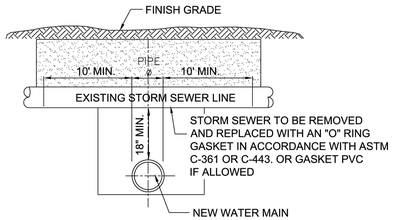

NOTE:
NEW STORM SEWER INSTALLATION SHALL BE GASKETED STRUCTURE TO STRUCTURE

City of Naperville STANDARD DETAIL

WATER MAIN PROTECTION FROM EXISTING STORM SEWER PIPE

REVISED: 01/01/2013 | SHEET 1 OF 1

WATER 14

490.14

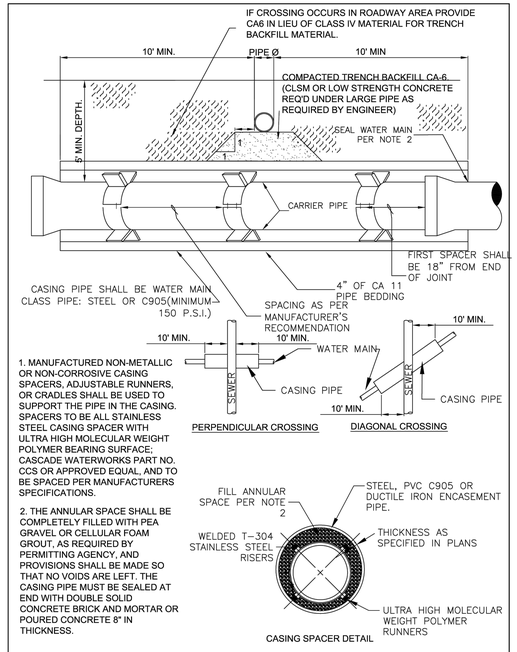

1. MANUFACTURED NON-METALLIC OR NON-CORROSIVE CASING SPACERS, ADJUSTABLE RUNNERS, OR CRADLES SHALL BE USED TO SUPPORT THE PIPE IN THE CASING. SPACERS TO BE ALL STAINLESS STEEL CASING SPACER WITH ULTRA HIGH MOLECULAR WEIGHT POLYMER BEARING SURFACE; CASCADE WATERWORKS PART NO. CCS OR APPROVED EQUAL, AND TO BE SPACED PER MANUFACTURERS SPECIFICATIONS.

2. THE ANNULAR SPACE SHALL BE COMPLETELY FILLED WITH PEA GRAVEL OR CELLULAR FOAM GROUT, AS REQUIRED BY PERMITTING AGENCY, AND PROVISIONS SHALL BE MADE SO THAT NO VOIDS ARE LEFT. THE CASING PIPE MUST BE SEALED AT END WITH DOUBLE SOLID CONCRETE BRICK AND MORTAR OR POURED CONCRETE 8" IN THICKNESS.

City of Naperville STANDARD DETAIL

WATER MAIN CASING PIPE

REVISED: 01/01/2013 | SHEET 1 OF 1

WATER 16

490.16

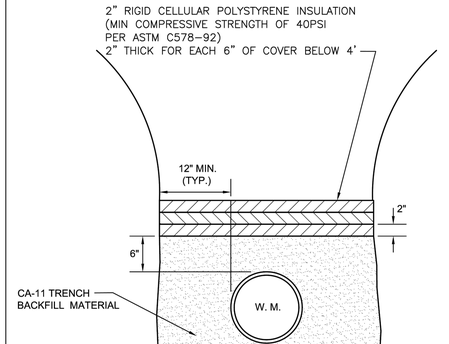

NOTE:
THIS METHOD MAY ONLY BE USED WHEN A MINIMUM 5' DEPTH TO THE TOP OF PIPE CANNOT BE ACHIEVED AND ONLY WITH THE WRITTEN APPROVAL OF THE CIVIL ENVIRONMENTAL ENGINEERING & CONSTRUCTION MANAGEMENT DIVISION, DEPARTMENT OF PUBLIC UTILITIES - WATER.

City of Naperville STANDARD DETAIL

PIPE INSULATION

REVISED: 01/01/2013 | SHEET 1 OF 1

WATER 12

490.12

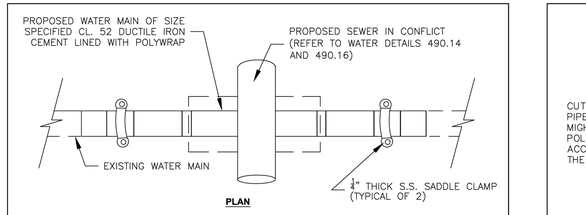

1.) PIPING TO BE DISINFECTED DURING INSTALLATION. ALL NEW JOINTS SHALL BE INSTALLED WITH MEG-A-LUG, OR APPROVED EQUAL, JOINT RESTRAINT. CONTRACTOR SHALL USE 22 1/2 OR 11 1/4 DEGREE BENDS IN LIEU OF 45 DEGREE BENDS WHERE POSSIBLE.

2.) VERTICAL THRUST BLOCKS UNDER BENDS SHALL BE 1 C.Y. MINIMUM OR SIZED AS NEEDED TO RESTRAIN BENDS. CONCRETE TO SUFFICIENTLY CURE PRIOR TO TESTING. POURED CONCRETE SHALL NOT BE PLACED AROUND PIPE BOLTS OR HINDER FUTURE MAINTENANCE.

3.) POLYWRAP SHOULD BE IN SHEETS INSTALLED UNDER WATER MAIN WITH ALL PIPING JOINTS EXPOSED UNTIL AFTER PRESSURE TEST IS COMPLETE, THEN WRAPPED AND TAPED IN PLACE PRIOR TO BACKFILLING.

4.) SEWERS INSTALLED ABOVE WATER MAIN SHALL BE DESIGNED TO PROVIDE WATER MAIN PROTECTION AS REQUIRED BY I.E.P.A

5.) ALL PIPING TO BE FLUSHED AND TWO SAFE CONSECUTIVE BACTERIAL SAMPLES TAKEN PRIOR TO CITY PLACING MAIN BACK IN SERVICE.

City of Naperville STANDARD DETAIL

LOWERING/ADJUSTING WATER MAIN

REVISED: 05/15/2015 | SHEET 1 OF 1

WATER 13

490.13

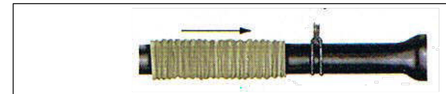

CUT A SECTION OF POLYETHYLENE TUBE APPROXIMATELY TWO FEET LONGER THAN THE PIPE SECTION. REMOVE ALL LUMPS OF CLAY, MUD, CINDERS, OR OTHER MATERIAL THAT MIGHT HAVE ACCUMULATED ON THE PIPE SURFACE DURING STORAGE. SLIP THE POLYETHYLENE TUBE AROUND THE PIPE, STARTING AT THE SPIGOT END. BUNCH THE TUBE ACCORDION-FASHION ON THE END OF THE PIPE. PULL BACK THE OVERHANGING END OF THE TUBE UNTIL IT CLEARS THE PIPE END.



MAKE THE OVERLAP OF THE POLYETHYLENE TUBE BY PULLING BACK THE BUNCHED POLYETHYLENE FROM THE PRECEDING LENGTH OF PIPE AND SECURING IT IN PLACE. NOTE: THE POLYETHYLENE MAY BE SECURED IN PLACE BY USING TAPE, STRING, PLASTIC TIE STRAPS, OR ANY OTHER MATERIAL CAPABLE OF HOLDING THE POLYETHYLENE ENCASEMENT SNUGLY AGAINST THE PIPE.



TAKE UP SLACK IN THE TUBE ALONG THE BARREL OF THE PIPE TO MAKE A SNUG, BUT NOT TIGHT, FIT. FOLD EXCESS POLYETHYLENE BACK OVER THE TOP OF THE PIPE.



REPAIR ALL SMALL RIPS, TEARS OR OTHER TUBE DAMAGE WITH MANUFACTURER APPROVED ADHESIVE TAPE.

1. COVER BENDS, REDUCERS AND OTHER PIPE-SHAPED APPURTENANCES WITH POLYETHYLENE IN THE SAME MANNER AS THE PIPE.

2. WRAP VALVES, TEES AND OTHER ODD-SHAPED APPURTENANCES WITH A FLAT SHEET OR SPLIT LENGTH OF POLYETHYLENE TUBE BY PASSING THE SHEET UNDER THE APPURTENANCES AND BRINGING IT UP AROUND THE BODY. MAKE SEAMS BY BRINGING THE EDGES OF THE POLYETHYLENE SHEET TOGETHER, FOLDING OVER TWICE, AND TAPING DOWN.

3. POLYETHYLENE ENCASEMENT TO BE IN ACCORDANCE WITH A.W.W.A. C105-99OR LATEST VERSION.

4. COPPER SERVICE TAPS ARE TO BE WRAPPED WITH POLYETHELENE OR A SUITABLE DIELECTRIC APE FOR A MINIMUM CLEAR DISTANCE OF 3' AWAY FROM THE MAIN.

City of Naperville STANDARD DETAIL

POLYETHYLENE ENCASEMENT

REVISED: 01/01/2013 | SHEET 1 OF 1

WATER 15

490.15

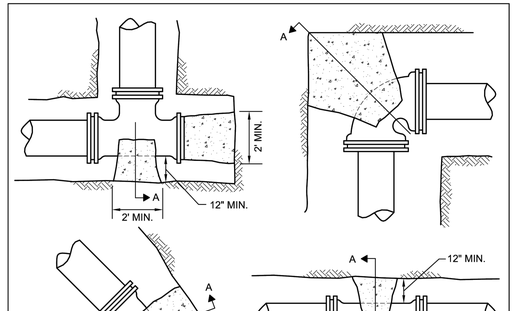

1. THRUST BLOCKING TO PREVENT MOVEMENT OF LINES UNDER PRESSURE AT BENDS, TEES, CAPS, VALVES, HYDRANTS, & AT POINTS SPECIFIED BY THE ENGINEER SHALL BE CLASS "SI".
2. CONCRETE A MINIMUM OF 12" THICK, PLACED BETWEEN SOLID GROUND & THE FITTING, AND SHALL BE ANCHORED IN SUCH A MANNER THAT THE PIPE AND FITTING WILL BE ACCESSIBLE FOR REPAIRS.
3. THRUST BLOCKS SHALL BE PLACED AT BENDS OF 11-1/4° OR MORE.
4. PIPE BENDS TO BE POLYETHYLENE ENCASED.
5. JOINT RESTRAINT AT BEND AND LENGTH OF PIPE EACH DIRECTION FROM BENDS AS REQUIRED BY THE CITY OF NAPERVILLE IF UNDISTURBED SOIL NOT AVAILABLE.
6. THRUST BLOCK FOR PIPES LARGER THAN 12"ø MUST BE POURED IN PLACE

City of Naperville STANDARD DETAIL

THRUST BLOCK

REVISED: 05/15/2015 | SHEET 1 OF 1

WATER 11

490.11

NO.	REVISIONS	DATE	BY
1	REVISED PER SITE CHANGES	07/07/25	JTA
2	REVISED PER CITY	05/14/25	JTA
3	REVISED PER CITY	04/10/25	JTA
4	REVISED PER IDOT & CITY	03/07/25	INS
5	REVISED PER CITY	11/26/24	INS

Kimley»Horn

© 2024 KIMLEY-HORN AND ASSOCIATES, INC.

570 LAKE COOK ROAD, SUITE 200
DEERFIELD, IL 60015
PHONE: 847-405-2004
WWW.KIMLEY-HORN.COM

SCALE: AS NOTED
DESIGNED BY: JTA
DRAWN BY: TVC
CHECKED BY: INS

Casey's

CONSTRUCTION DETAILS - SANITARY & WATERMAIN

CASEY'S
NAPERVILLE #6531

20 E. OGDEN AVE
NAPERVILLE, IL 60563

ORIGINAL ISSUE: 10/01/2024

KHA PROJECT NO. 168865042

SHEET NUMBER

C-605

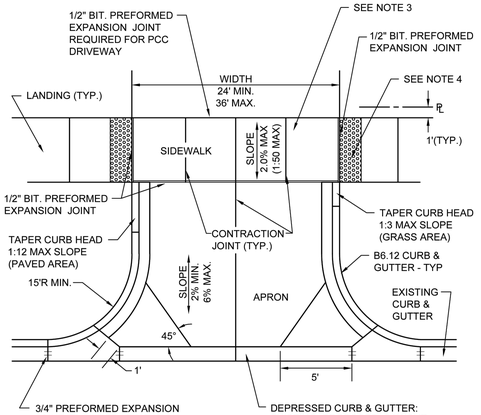

NOTES:

1. ALL AGGREGATE SUB BASE SHALL BE MECHANICALLY COMPACTED.
2. SIDEWALK SHALL CONTINUE THROUGH DRIVEWAYS.
3. SIDEWALK THICKNESS ACROSS DRIVEWAYS SHALL BE A MINIMUM OF 8" PCC ON 4" AGGREGATE SUB BASE.
4. EXPANSION JOINT MATERIAL MUST MATCH THE FULL DEPTH OF THE PAVEMENT.
5. DETECTABLE WARNINGS SHALL ONLY BE INSTALLED AT DRIVEWAYS WITH PERMANENT TRAFFIC CONTROL DEVICES.
6. SIDEWALK CONSTRUCTION SHALL FOLLOW APPLICABLE IDOT STANDARDS.
7. SIDEWALKS SHALL FOLLOW CURRENT ADA GUIDELINES.

City of Naperville STANDARD DETAIL	TYPICAL COMMERCIAL DRIVEWAY DETAIL	PAVEMENT 5
	REVISED: 08/01/2018 SHEET 1 OF 1	590.05

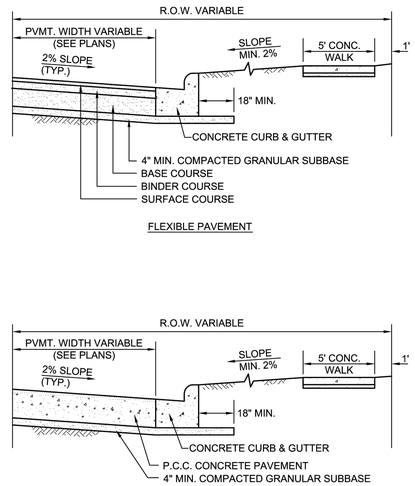

FLEXIBLE PAVEMENT

RIGID PAVEMENT

City of Naperville STANDARD DETAIL	TYPICAL PAVEMENT DETAILS	PAVEMENT 10
	REVISED: 01/01/2013 SHEET 1 OF 1	590.10

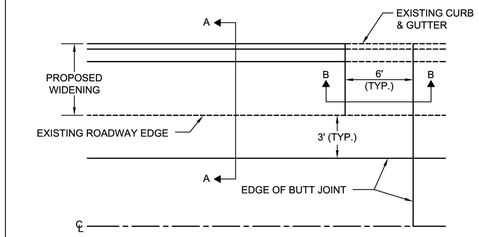

NOTE:

FOR WIDENING LESS THAN 8' WHERE COMPACTION IS DIFFICULT, CONCRETE SHALL BE USED.

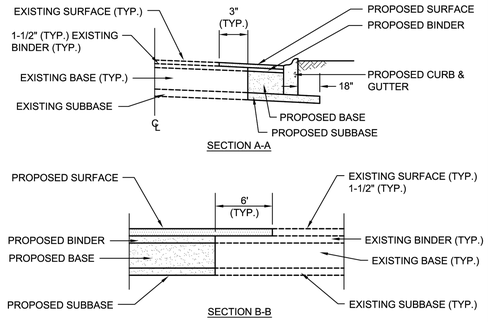

City of Naperville STANDARD DETAIL	BUTT JOINT DETAIL	PAVEMENT 11
	REVISED: 01/01/2013 SHEET 1 OF 1	590.11

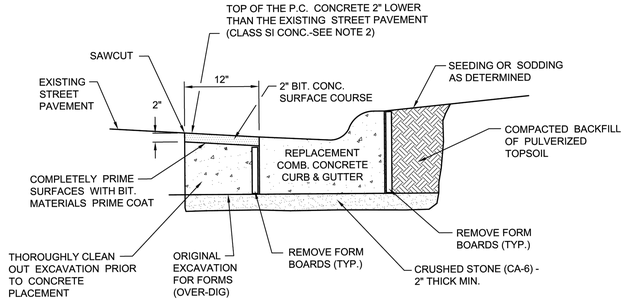

NOTES:

1. THE COMPLETE REPAIR OF PAVEMENTS ADJACENT TO THE REPLACEMENT CONCRETE CURB AND GUTTER IS INCLUDED IN THE COST OF THE NEW CURB AND GUTTER.
2. CLASS SI CONCRETE SHALL BE POURED SEPARATELY FROM THE CURB ONCE THE FORM BOARDS HAVE BEEN REMOVED.

City of Naperville STANDARD DETAIL	CURB REPLACEMENT	PAVEMENT 24
	REVISED: 05/15/2015 SHEET 1 OF 1	590.24

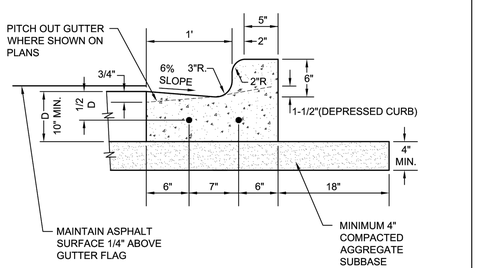

NOTES:

1. 3/4" PREFORMED BITUMINOUS EXPANSION JOINT WITH TWO (2) NUMBER 6 COATED SMOOTH DOWEL BARS (3/4" DIA. X 18") WITH GREASE CAPS SHALL BE PLACED EVERY 150', 10' EITHER SIDE OF DRAINAGE STRUCTURES, P.C.'S, RADIUS POINTS AND BACK OF CUL-DE-SACS. WHEN EXPANSION JOINTS ARE CONSTRUCTED ADJACENT TO EXISTING CURB & GUTTER THE EXISTING CURB SHALL BE DRILLED AND TWO (2) NUMBER 6 COATED SMOOTH DOWEL BARS (3/4" X 18") GROUTED IN PLACE. GREASE CAPS SHALL BE PLACED ON THE SIDE OF THE NEW CURB AND GUTTER SHALL HAVE A PINCHED STOP THAT WILL PROVIDE A MINIMUM 1" EXPANSION.
2. TOOLED CONTROL JOINTS OR SAWCUTS SHALL BE MADE EVERY 15'.
3. SAWCUTS SHALL BE MADE WITHIN TWENTY-FOUR (24) HOURS AND SEALED WITH A CITY APPROVED JOINT SEALANT. JOINTS SHALL BE CLEAN AND DRY PRIOR TO APPLICATION OF SEALANT.
4. FOR CURB AND GUTTER CONSTRUCTED OVER UTILITY TRENCHES, TWO (2) EPOXY COATED REINFORCING BARS (NO. 4) SHALL BE PLACED IN THE CURB AND GUTTER, CENTERED OVER THE TRENCH.

City of Naperville STANDARD DETAIL	B6.12 BARRIER CURB & GUTTER	PAVEMENT 20
	REVISED: 01/01/2013 SHEET 1 OF 1	590.20

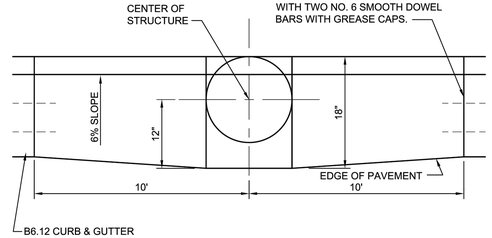

PLAN

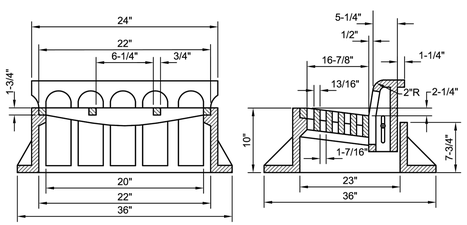

NOTES:

1. GRATE & CASTING SHALL BE EAST JORDAN 7220 OR NEENAH R-3278-A OR AS APPROVED BY THE CITY ENGINEER.
2. ALL CASTINGS SHALL BE SHOP PAINTED WITH AN ASPHALTIC BASE.

City of Naperville STANDARD DETAIL	B6.12 BARRIER CURB & GUTTER AT CURB INLETS	PAVEMENT 21
	REVISED: 01/01/2013 SHEET 1 OF 1	590.21

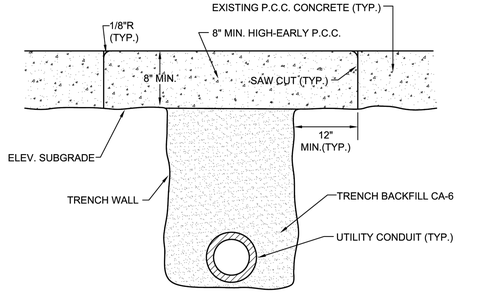

NOTES:

1. THE TRENCH SHALL BE BACKFILLED WITH AGGREGATE (CA-6) AND COMPACTED TO 95% OF THE STANDARD PROCTOR DENSITY. TRENCH SPOILS OR EXCAVATED MATERIAL SHALL BE DISCARDED BY THE CONTRACTOR, AT HIS EXPENSE, AT DUMP SITES OR IN A SUITABLE FASHION AS APPROVED BY THE CITY ENGINEER.
2. PRIOR TO PLACING OF P.C.C. CONCRETE, THE EXPOSED EDGES OF ALL EXISTING PAVEMENT SHALL BE SAW CUT TO PROVIDE A SMOOTH, CLEAN EDGE, FREE OF LOOSE MATERIAL.
3. EXCAVATIONS SHALL BE PROTECTED BY BARRICADES WITH FLASHING LIGHTS. A 1" STEEL PLATE SHALL BE PROVIDED AND MAINTAINED BY THE CONTRACTOR AT LOCATIONS WHERE ADJUSTMENTS ARE LOCATED IN TRAVEL LANES UNTIL THE SURFACE RESTORATION IS COMPLETE. THE PLATE SHALL BE PROTECTED FROM SLIDING AND PROVIDED WITH BITUMINOUS RAMPS.
4. TRENCH TO BE COMPACTED IN CONFORMANCE WITH ARTICLE 603.08 OF THE IDOT STANDARD SPECIFICATIONS FOR ROAD AND BRIDGE CONSTRUCTION.

City of Naperville STANDARD DETAIL	UTILITY TRENCH PAVING SECTION (RIGID PAVEMENTS)	PAVEMENT 12
	REVISED: 01/01/2013 SHEET 1 OF 1	590.12

NO.	REVISIONS	DATE	BY
1	REVISED PER IDOT & CITY	11/26/24	INS
2	REVISED PER CITY	03/07/25	INS
3	REVISED PER CITY	04/10/25	JTA
4	REVISED PER CITY	05/14/25	JTA
5	REVISED PER SITE CHANGES	07/07/25	JTA

Kimley»Horn

© 2024 KIMLEY-HORN AND ASSOCIATES, INC.

570 LAKE COOK ROAD, SUITE 200
DEERFIELD, IL 60015
PHONE: 847-405-2004
WWW.KIMLEY-HORN.COM

SCALE: AS NOTED
DESIGNED BY: JTA
DRAWN BY: TVC
CHECKED BY: INS

Casey's

CONSTRUCTION DETAILS - PAVEMENT & MISCELLANEOUS

CASEY'S
NAPERVILLE #6531

20 E. OGDEN AVE
NAPERVILLE, IL 60563

ORIGINAL ISSUE: 10/01/2024
KHA PROJECT NO. 168865042
SHEET NUMBER
C-606

Drawing name: K:\CHS_LDEV\168865042_Casey's_6531_Naperville_IL\2 Design\CAD\PlanSheets\C-600 CONSTRUCTION DETAILS.dwg C-606 Jul 03, 2025 12:18pm by: Jake.Antony
This document, together with the concepts and designs presented herein, as an instrument of service, is intended only for the specific purpose and client for which it was prepared. Reuse of and improper reliance on this document without written authorization and adaptation by Kimley-Horn and Associates, Inc. shall be without liability to Kimley-Horn and Associates, Inc.

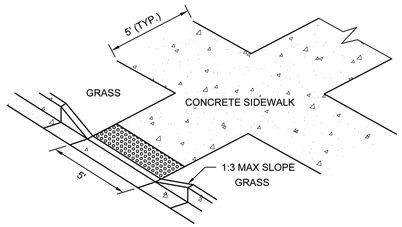

ISOMETRIC VIEW

NOTES:

1. ALL AGGREGATE SUB-BASE SHALL BE MECHANICALLY COMPACTED.
2. SIDEWALK THICKNESS AT CURB RAMPS SHALL BE A MINIMUM OF 6" PCC ON 2" AGGREGATE SUB BASE.
3. SIDEWALK CONSTRUCTION SHALL FOLLOW APPLICABLE IDOT STANDARDS.
4. SIDEWALKS SHALL FOLLOW CURRENT ADA GUIDELINES.

APPLICABLE IDOT STANDARD DETAILS (USE LATEST REVISION):

424001-XX	PERPENDICULAR CURB RAMPS FOR SIDEWALKS
424006-XX	DIAGONAL CURB RAMPS FOR SIDEWALKS
424011-XX	CORNER PARALLEL CURB RAMPS FOR SIDEWALKS
424016-XX	MID-BLOCK CURB RAMPS FOR SIDEWALKS
424021-XX	DEPRESSED CORNER FOR SIDEWALKS
424026-XX	ENTRANCE/ALLEY PEDESTRIAN CROSSINGS
424031-XX	MEDIAN PEDESTRIAN CROSSINGS
606001-XX	CONCRETE CURB TYPE B AND COMB CONCRETE CURB AND GUTTER

APPROVED ADA DETECTABLE WARNING TILES:

1. ADA SOLUTIONS - CAST IN PLACE REPLACEABLE
2. ARMOR TILE - CAST IN PLACE
3. DETECTILE - SLIMTEK II
4. TUFTILE - POLYMER WET-SET

City of Naperville STANDARD DETAIL	CURB RAMPS	PAVEMENT 32
	REVISED: 08/01/2018 — SHEET 1 OF 1	590.32

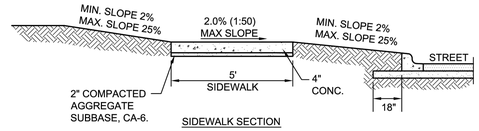

SIDEWALK SECTION

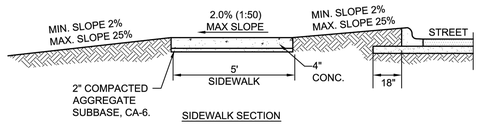

SIDEWALK SECTION

NOTES:

1. CONCRETE SHALL BE IDOT CLASS SI.
2. MINIMUM SIDEWALK THICKNESS SHALL BE 4".
3. SIDEWALK THICKNESS ACROSS DRIVEWAYS SHALL BE AT A MINIMUM 6" FOR RESIDENTIAL DRIVEWAYS AND 8" FOR COMMERCIAL DRIVEWAYS.
4. MAXIMUM LONGITUDINAL SLOPE SHALL NOT EXCEED 5% (20:1). FOR ANY SLOPE IN EXCESS OF 5%, ALL REQUIREMENTS OF THE ILLINOIS ACCESSIBILITY CODE (LATEST EDITION) SHALL BE MET.
5. MINIMUM TRANSVERSE SLOPE SHALL BE 1.0% (1:100). MAXIMUM TRANSVERSE SLOPE SHALL BE 2.0% (1:50).
6. A MINIMUM 2" AGGREGATE SUBBASE (CA-6) SHALL BE PROVIDED. (4" THROUGH COMMERCIAL DRIVEWAYS).
7. AGGREGATE SUBBASE SHALL BE MECHANICALLY COMPACTED.
8. ALL SIDEWALKS SHALL BE PROMPTLY BACKFILLED AND PROTECTED FROM DAMAGE.
9. SIDEWALK CONSTRUCTION SHALL FOLLOW APPLICABLE IDOT STANDARDS.
10. SIDEWALKS SHALL FOLLOW CURRENT ADA GUIDELINES.

City of Naperville STANDARD DETAIL	SIDEWALK	PAVEMENT 30
	REVISED: 01/01/2013 — SHEET 1 OF 1	590.30

SPECIFICATIONS

Notes:

1. 4" FPT inlet/outlet with 4" plain end adapters, single inlet and triple outlet.
2. Unit weight - w/ cast iron covers: 190 lbs. (For wet weight add 1,043 lbs.)
3. Maximum operating temperature: 150° F continuous
4. Capacities - Liquid: 125 gal.
   Grease: 861 lbs. (118 gal.) @75 GPM
   Solids: 31 gal.
5. For gravity drainage applications only.
6. Do not use for pressure applications.
7. Cover placement allows full access to tank for proper maintenance.
8. Vent not required unless per local code.
9. Engineered inlet and outlet diffusers with inspection ports are removable to inspect / clean piping.
10. Integral air relief / Anti-siphon / Sampling access.
11. Adjustable cover adapter provides up to 4" of additional height.
12. Designed for below-grade, above-grade, indoor and outdoor installations.
13. Safety Star®, access restrictor built into cover adapter, prevents accidental entry to tank (450 lb rating).

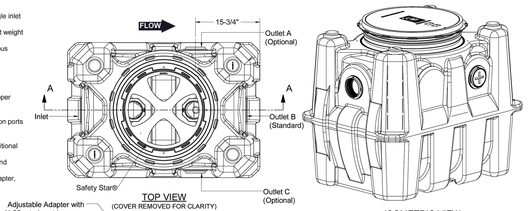

TOP VIEW
(COVER REMOVED FOR CLARITY)

ISOMETRIC VIEW

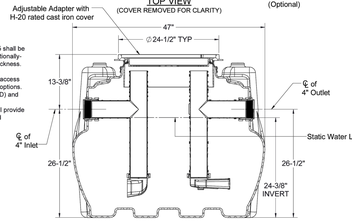

SECTION A-A

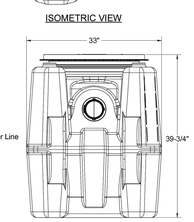

END VIEW

ENGINEER SPECIFICATION GUIDE

Schier Great Basin™ grease interceptor model # GB-75 shall be lifetime guaranteed and made in USA of seamless, rotationally-molded polyethylene with minimum 3/8" uniform wall thickness. Interceptor shall be furnished for above or below-grade installation with adjustable cover adapter, Safety Star® access restrictor built into each cover adapter, and three outlet options. Interceptor shall be certified to ASME A112.14.3 (Type D) and CSA B481.1. Interceptor flow rate shall be 75 GPM. Interceptor grease capacity shall be 861 lbs. Cover shall provide water/gas-tight seal and have minimum 16,000 lbs. load capacity.

CERTIFIED PERFORMANCE

Great Basin™ hydromechanical grease interceptors are third party performance-tested and listed by IAPMO to ASME #A112.14.3 and CSA B481.1 grease interceptor standards and greatly exceed requirements for grease separation and storage. They are compliant to the Uniform Plumbing Code and the International Plumbing Code.

Type D certification does not require a flow control

SPECIFICATION SHEET

MODEL NUMBER:	PART NUMBER: 4045-007-02			
GB-75	DESCRIPTION: GB-75 GREASE INTERCEPTOR 75 GPM, 4" INLET/OUTLET, H-20 RATED CAST IRON COVER			
	DWG BY: C. BUSENITZ	DATE: 4/14/2022	REV: -	ECO: -

PROPRIETARY AND CONFIDENTIAL
THE INFORMATION CONTAINED IN THIS DRAWING IS THE SOLE PROPERTY OF SCHIER PRODUCTS. ANY REPRODUCTION IN PART OR AS A WHOLE WITHOUT THE WRITTEN PERMISSION OF SCHIER PRODUCTS IS PROHIBITED.

SCHIER
6455 Woodland Dr
Shawnee, KS 66218
Tel: 913-951-3300
Fax: 913-951-3399
schierproducts.com

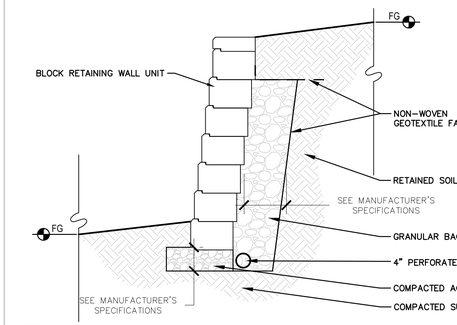

NOTES:

1. THIS DETAIL IS FOR INFORMATION ONLY. CONTRACTOR TO SUBMIT SHOP DRAWINGS OF THE RETAINING WALL DESIGN SIGNED AND SEALED BY A LICENSED STRUCTURAL ENGINEER FOR ENGINEER'S REVIEW AND APPROVAL.
2. CONTRACTOR TO PROVIDE RETAINING WALL PRODUCT SPECIFICATIONS, INCLUDING BLOCK TYPE, SIZE AND COLOR TO OWNER, ENGINEER AND PROJECT ARCHITECT FOR APPROVAL.
3. SEE LAYOUT, UTILITY, GRADING, AND LANDSCAPING PLANS FOR WALL HEIGHT AND LENGTH. SEE UTILITY PLAN FOR ANY UTILITY PENETRATION OF THE WALL BOLLARDS & LANDSCAPING, FENCE, ETC. CONTRACTOR TO VERIFY BATTER ANGLE AND WALL SETBACK DISTANCE PRIOR TO STAKING THE WALL.
4. GEOGRID REINFORCEMENT TO BE PROVIDED BASED ON MANUFACTURER RECOMMENDATIONS AND SOIL CONDITIONS. CONTRACTOR TO VERIFY SUFFICIENT CLEARANCE TO INSTALL GEOGRID TO THE LENGTH REQUIRED IS ACHIEVABLE WITHIN THE PROJECT LIMITS PRIOR TO ORDERING RETAINING WALL MATERIALS.
5. A 4" MINIMUM PERFORATED UNDERDRAIN PIPE WRAPPED IN A FILTER SOCK SHALL BE PROVIDED ACCORDING TO THE MANUFACTURER GUIDELINES.
6. COMPACTED AGGREGATE BASE, SUBGRADE, BURY DEPTH AND GRANULAR BACKFILL DRAINAGE LAYER SHALL BE ACCORDING TO THE MANUFACTURER'S GUIDELINES.
7. NON-WOVEN GEOTEXTILE FABRIC SHALL BE PROVIDED AROUND LIMITS OF GRANULAR BACKFILL DRAINAGE LAYER AS SHOWN.
8. THE PROJECT GEOTECHNICAL ENGINEER SHALL BE CONSULTED FOR INTERPRETATION OF THE SUBSURFACE CONDITIONS, STABILITY OF THE DESIGN PARAMETERS OR INTERPRETATION OF SUBSURFACE GROUNDWATER CONDITIONS.

SEGMENTAL BLOCK RETAINING WALL

N.T.S.

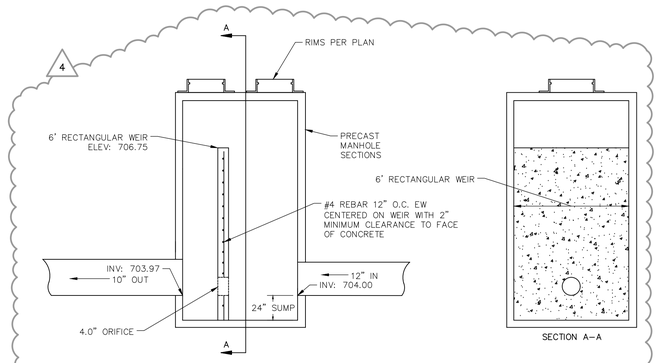

OUTLET CONTROL STRUCTURE

N.T.S.

ZERO CURB TRANSITION

N.T.S.

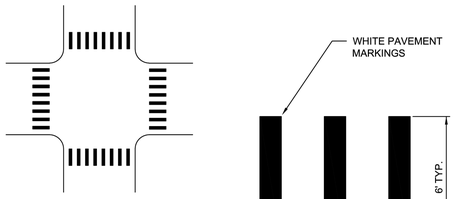

NOTES:

1. SPACING BETWEEN PAVEMENT MARKINGS MAY BE INCREASED TO A MAXIMUM OF 2.5' TO AVOID WHEEL PATHS.

SCHOOL AND PEDESTRIAN

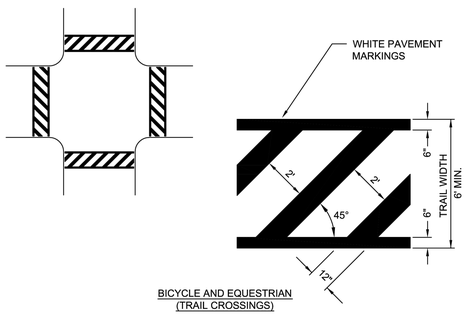

BICYCLE AND EQUESTRIAN
(TRAIL CROSSINGS)

City of Naperville STANDARD DETAIL	CROSSWALK	PAVEMENT 33
	REVISED: 06/14/2013 — SHEET 1 OF 1	590.33

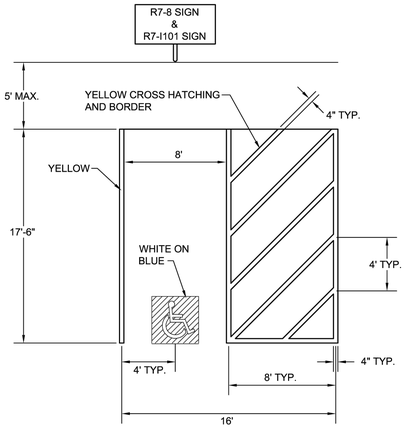

NOTE:

FOR MULTIPLE ACCESSIBLE PARKING SPACES IN A ROW, THE DESIGN ENGINEER HAS THE OPTION OF USING THE ABOVE SHOWN UNIT IN A COMBINATION OF LEFT-HANDED AND RIGHT-HANDED LAYOUTS IF IT PROVIDES FOR BETTER SITE DESIGN.

City of Naperville STANDARD DETAIL	ACCESSIBLE PARKING SPACE MARKINGS	PAVEMENT 35
	REVISED: 10/04/2023 — SHEET 2 OF 3	590.35

NOTES FOR ACCESSIBLE PARKING SPACES:

1. EACH PARKING SPACE SHALL BE AT LEAST 16' WIDE, WITH AN 8' WIDE ACCESS AISLE.
2. TWO PARKING SPACES MAY SHARE AN ACCESS AISLE EXCEPT FOR ANGLED PARKING SPACES.
3. PARKING SPACE IDENTIFICATION SIGN WITH INTERNATIONAL SYMBOL OF ACCESSIBILITY (R7-8) SHALL BE MOUNTED ON A PERMANENT POST OR WALL AT THE FRONT CENTER OF THE ACCESSIBLE PARKING SPACE, SET AT A MINIMUM OF 5' ABOVE THE GROUND SURFACE MEASURED TO THE BOTTOM OF THE SIGN AND NO MORE THAN 5' HORIZONTALLY FROM THE FRONT OF A PARKING SPACE.
4. ACCESSIBLE PARKING SIGNS SHALL ALSO EXHIBIT THE WORDS "$250 FINE" OR THE "$250 FINE" SIGN (R7-I101) SHALL BE PLACED BENEATH THE ACCESSIBLE PARKING SIGN (R7-8).
5. PARKING SPACES DESIGNED FOR PERSONS WITH DISABILITIES AND ACCESSIBLE PASSENGER LOADING ZONES THAT SERVE A PARTICULAR BUILDING, SHALL BE LOCATED ON THE SHORTEST POSSIBLE ACCESSIBLE CIRCULATION ROUTE TO AN ACCESSIBLE ENTRANCE OF THE BUILDING.
6. IN SEPARATE PARKING STRUCTURES OR LOTS THAT DO NOT SERVE A PARTICULAR BUILDING, PARKING SPACES FOR PERSONS WITH DISABILITIES SHALL BE LOCATED ON THE SHORTEST POSSIBLE CIRCULATION ROUTE TO AN ACCESSIBLE PEDESTRIAN ENTRANCE OF THE PARKING FACILITY.

# OF ACCESSIBLE SPACES REQUIRED PER # OF OFF STREET PARKING	
TOTAL OFF STREET PARKING SPACES REQUIRED	REQUIRED MINIMUM NUMBER OF ACCESSIBLE PARKING SPACES
1 TO 25	1
26 TO 50	2
51 TO 75	3
76 TO 100	4
101 TO 150	5
151 TO 200	6
201 TO 300	7
301 TO 400	8
401 TO 500	9
501 TO 1000	2% OF TOTAL NUMBER
OVER 1000	20 PLUS 1 FOR EACH 100 OVER 1000



ACCESSIBLE PARKING
SIGN (R7-8)



"$250 FINE" SIGN
(R7-I101)



VAN ACCESSIBLE SIGN
(OPTIONAL)
18" x 9"
2" SERIES D LETTERS

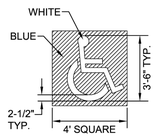

ACCESSIBLE SYMBOL
LINES SHALL BE WHITE.

City of Naperville STANDARD DETAIL	ACCESSIBLE PARKING SPACE MARKINGS	PAVEMENT 35
	REVISED: 10/04/2023 — SHEET 3 OF 3	590.35

BUSINESS DISTRICT
(SEE STANDARD DETAIL 590.14 FOR DOWNTOWN STREETSCAPE)

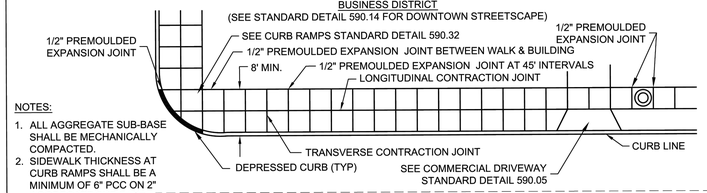

NOTES:

1. ALL AGGREGATE SUB-BASE SHALL BE MECHANICALLY COMPACTED.
2. SIDEWALK THICKNESS AT CURB RAMPS SHALL BE A MINIMUM OF 6" PCC ON 2" AGGREGATE SUB BASE.
3. SIDEWALK CONSTRUCTION SHALL FOLLOW APPLICABLE IDOT STANDARDS.
4. SIDEWALKS SHALL FOLLOW CURRENT ADA GUIDELINES.

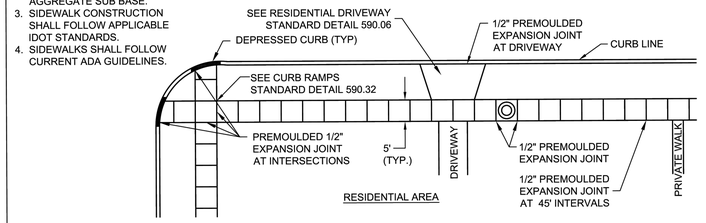

RESIDENTIAL AREA

City of Naperville STANDARD DETAIL	SIDEWALK CONSTRUCTION	PAVEMENT 31
	REVISED: 01/01/2013 — SHEET 1 OF 1	590.31

NO.	REVISIONS	DATE	BY
1	REVISED PER SITE CHANGES	07/07/25	JTA
2	REVISED PER CITY	05/14/25	JTA
3	REVISED PER IDOT & CITY	04/10/25	JTA
4	REVISED PER CITY	03/07/25	INS
5	REVISED PER CITY	11/26/24	INS

Kimley»Horn

© 2024 KIMLEY-HORN AND ASSOCIATES, INC.

570 LAKE COOK ROAD, SUITE 200
DEERFIELD, IL 60015
PHONE: 847-520-9200
WWW.KIMLEY-HORN.COM

SCALE: AS NOTED
DESIGNED BY: JTA
DRAWN BY: TVC
CHECKED BY: INS

Casey's

CONSTRUCTION DETAILS - PAVEMENT & MISCELLANEOUS

CASEY'S
NAPERVILLE #6531

20 E. OGDEN AVE
NAPERVILLE, IL 60563

ORIGINAL ISSUE: 10/01/2024
KHA PROJECT NO. 168865042
SHEET NUMBER
C-607

Drawing name: K:\CHS_LDEV\168865042_Casey's_6531_Naperville_IL\2 Design\CAD\PlanSheets\C-600 CONSTRUCTION DETAILS.dwg C-607 Jul 03, 2025 12:18pm by Jake.Antony
This document, together with the concepts and designs presented herein, as an instrument of service, is intended only for the specific purpose and client for which it was prepared. Reuse of and improper reliance on this document without written authorization and adaptation by Kimley-Horn and Associates, Inc. shall be without liability to Kimley-Horn and Associates, Inc.

PAVER SPECIFICATIONS:

1. RED BLEND CONCRETE PAVERS
   MANUFACTURER: UNILOCK
   PRODUCT: IL CAMPO
   SIZE: 7.75" X 4" X 2.25"
   COLOR: HERITAGE BROWN
2. TAN CONCRETE PAVERS
   MANUFACTURER: UNILOCK
   PRODUCT: HOLLAND PREMIER
   SIZE: 7.75" X 4" X 2.25"
   COLOR: SANDSTONE
3. JOINTING MATERIAL:
   MANUFACTURER APPROVED
   POLYMERIC SAND
   COLOR: TAN
4. CONCRETE PAVERS SHALL CONFORM TO THE FOLLOWING REQUIREMENTS SET FORTH IN ASTM C-936:
   4.1. MEASURED LENGTH OF TEST SPECIMENS SHALL NOT DIFFER BY MORE THAN +/- 0.063 IN., WHILE MEASURED THICKNESS SHALL NOT DIFFER BY MORE THAN +/- 0.125 IN.
   4.2. AVERAGE COMPRESSIVE STRENGTH OF 8,000 PSI WITH NO INDIVIDUAL UNIT UNDER 7,200 PSI WHEN TESTED ACCORDANCE WITH ASTM C-140.
   4.3. FREEZE-THAW TESTING IS REQUIRED AND THE AVERAGE MASS LOSS OF ALL SPECIMENS TESTED SHALL NOT BE GREATER THAN (A) 225G/M2 WHEN SUBJECT TO 28 FREEZE THAW CYCLES, OR (B) 500GM/M2 WHEN SUBJECT TO 49 FREEZE THAW CYCLES. TESTING SHALL BE CONDUCTED USING A 3% SALINE SOLUTION IN ACCORDANCE WITH ASTM C-1645.
   4.4. PIGMENT IN CONCRETE PAVERS SHALL CONFORM TO ASTM C-979.
5. PAVERS SHALL BE INSTALLED PER MANUFACTURER SPECIFICATIONS AND ACCORDING TO CURRENT ICPI STANDARDS.

SIDEWALK SPECIFICATIONS:

1. CONCRETE SHALL BE IDOT CLASS SI.
2. MINIMUM SIDEWALK THICKNESS SHALL BE 4".
3. SIDEWALK THICKNESS ACROSS DRIVEWAYS SHALL BE AT A MINIMUM 6" FOR RESIDENTIAL DRIVEWAYS AND 8" FOR COMMERCIAL DRIVEWAYS.
4. MAXIMUM LONGITUDINAL SLOPE SHALL NOT EXCEED 8.3% (12:1). FOR ANY SLOPE IN EXCESS OF 5% UP TO 8.3%, LANDINGS AND HANDRAILS WILL BE REQUIRED PER THE ILLINOIS ACCESSIBILITY CODE (LATEST EDITION).
5. MINIMUM TRANSVERSE SLOPE SHALL BE 1.0% (1:100). MAXIMUM TRANSVERSE SLOPE SHALL BE LESS THAN 2.0% (1:50).
6. A MINIMUM 4" AGGREGATE SUBBASE (CA-6) SHALL BE PROVIDED. (6" THROUGH COMMERCIAL DRIVES).
7. AGGREGATE SUBBASE SHALL BE MECHANICALLY COMPACTED.
8. ALL SIDEWALKS SHALL BE PROMPTLY BACKFILLED AND PROTECTED FROM DAMAGE.
9. SIDEWALK CONSTRUCTION SHALL FOLLOW IDOT STANDARDS.
10. SIDEWALKS SHALL FOLLOW CURRENT ADA GUIDELINES.

OBSTRUCTIONS WITHIN PAVERS

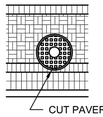

NOTES:

APPLIES TO ALL UTILITIES AND OBSTRUCTIONS WITHIN THE PAVER AREAS.

City of Naperville STANDARD DETAIL | DOWNTOWN STREETSCAPE MATERIALS | REVISED: 4/24/2019 | SHEET 1 OF 8 | PAVEMENT 15 | 590.15

3.7

DOWNTOWN STREETSCAPE TYPE

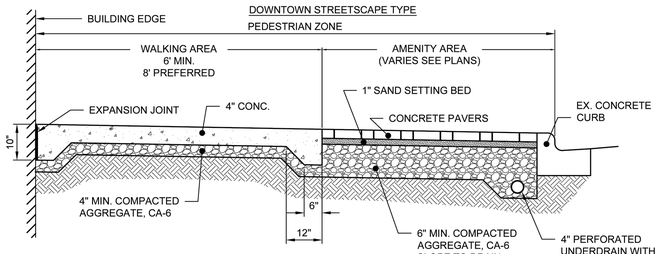

NOTES:

1. FOR MORE INFORMATION ON STREETSCAPE TYPE AND LAYOUT REFER TO CHAPTER 2 OF THE DOWNTOWN STREETSCAPE STANDARD.
2. REFER TO STANDARD 590.15 SHEET 1 FOR HARDSCAPE MATERIALS AND SPECIFICATIONS.
3. 3/4" PREMOLDED EXPANSION JOINT BETWEEN BUILDING AND SIDEWALK.
4. PAVERS SHALL BE INSTALLED PER MANUFACTURER'S RECOMMENDATIONS.

City of Naperville STANDARD DETAIL | DOWNTOWN STREETSCAPE
DOWNTOWN STREETSCAPE TYPE PAVEMENT DETAIL | REVISED: 4/24/2019 | SHEET 2 OF 8 | PAVEMENT 15 | 590.15

3.9

DOWNTOWN STREETSCAPE TYPE - WIDE > 16.5' WIDTH

NOTES:

1. FOR MORE INFORMATION ON STREETSCAPE TYPE AND LAYOUT REFER TO CHAPTER 2 OF THE DOWNTOWN STREETSCAPE STANDARD.
2. REFER TO STANDARD 590.15 SHEET 1 FOR HARDSCAPE MATERIALS AND SPECIFICATIONS.
3. 3/4" PREMOLDED EXPANSION JOINT BETWEEN BUILDING AND SIDEWALK.
4. INSTALL PAVERS PER MANUFACTURER'S RECOMMENDATIONS.
5. TOOLED CONTROL JOINTS SHALL BE MADE AS SHOWN, AND A 1/2" PREMOLDED EXPANSION JOINT PLACED AT 42' INTERVALS.
6. MEDIUM BRUSH FINISH WITH TOOLED JOINTS. CALIFORNIA FINISH IS PROHIBITED. SAW CUT JOINTS ARE PROHIBITED.

City of Naperville STANDARD DETAIL | DOWNTOWN STREETSCAPE
DOWNTOWN STREETSCAPE TYPE - WIDE (PLAN) | REVISED: 4/24/2019 | SHEET 6 OF 8 | PAVEMENT 15 | 590.15

3.17

DOWNTOWN STREETSCAPE TYPE - NARROW < 11'

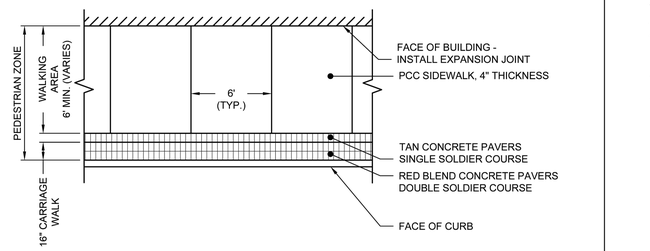

NOTES:

1. FOR MORE INFORMATION ON STREETSCAPE TYPE AND LAYOUT REFER TO CHAPTER 2 OF THE DOWNTOWN STREETSCAPE STANDARD.
2. REFER TO STANDARD 590.15 SHEET 1 FOR HARDSCAPE MATERIALS AND SPECIFICATIONS.
3. 3/4" PREMOLDED EXPANSION JOINT BETWEEN BUILDING AND SIDEWALK. WATERPROOF CAULK SHALL BE APPLIED TO THE TOP 3/4".
4. INSTALL PAVERS PER MANUFACTURER'S RECOMMENDATIONS.
5. TOOLED CONTROL JOINTS SHALL BE MADE AS SHOWN, AND A 1/2" PREMOLDED EXPANSION JOINT PLACED AT 42' INTERVALS.
6. MEDIUM BRUSH FINISH WITH TOOLED JOINTS. CALIFORNIA FINISH IS PROHIBITED. SAW CUT JOINTS ARE PROHIBITED.

City of Naperville STANDARD DETAIL | DOWNTOWN STREETSCAPE
DOWNTOWN STREETSCAPE TYPE - NARROW < 11' (PLAN) | REVISED: 4/24/2019 | SHEET 3 OF 8 | PAVEMENT 15 | 590.15

3.11

4

NO.	REVISIONS	DATE	BY
1	REVISED PER SITE CHANGES	07/07/25	JTA
2	REVISED PER CITY	05/14/25	JTA
3	REVISED PER CITY	04/10/25	JTA
4	REVISED PER IDOT & CITY	03/07/25	INS
5	REVISED PER CITY	11/26/24	INS

Kimley»Horn

© 2024 KIMLEY-HORN AND ASSOCIATES, INC.

570 LAKE COOK ROAD, SUITE 200
DEERFIELD, IL 60015
PHONE: 847-405-4050
WWW.KIMLEY-HORN.COM

SCALE: AS NOTED
DESIGNED BY: JTA
DRAWN BY: TVC
CHECKED BY: INS

Casey's

CONSTRUCTION DETAILS - PAVEMENT & MISCELLANEOUS

CASEY'S
NAPERVILLE #6531

20 E. OGDEN AVE
NAPERVILLE, IL 60563

ORIGINAL ISSUE: 10/01/2024
KHA PROJECT NO. 168865042
SHEET NUMBER
C-607A

Drawing name: K:\CHS_LDEV\168865042_Casey's_6531_Naperville_IL\2 Design\CAD\FlexSheets\C-600 CITY STREETSCAPE CONSTRUCTION DETAILS.dwg C-607A Jul 03, 2025 12:19pm by Jake.Antony
This document, together with the concepts and designs presented herein, as an instrument of service, is intended only for the specific purpose and client for which it was prepared. Reuse of and improper reliance on this document without written authorization and adaptation by Kimley-Horn and Associates, Inc. shall be without liability to Kimley-Horn and Associates, Inc.

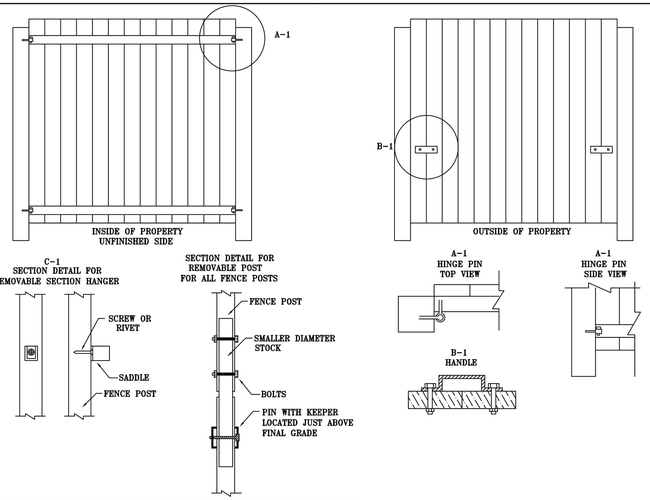

DPU-E RULES AND REGULATIONS:

TRANSFORMER FRONTS MUST HAVE AT LEAST 5' OF CLEARANCE AND ACCESSIBLE TO 10' FOR DPU-E WORKERS. THE SIDES MUST MAINTAIN A 5' CLEARANCE. IF CLEARANCES CAN NOT BE MET THEN THE STANDARDS ABOVE APPLY.

ALL PEDESTALS MUST HAVE AT LEAST 3' FEET OF CLEARANCE. IF CLEARANCES CAN NOT BE MET THEN THE STANDARDS ABOVE APPLY.

UTILITY POLES MUST HAVE AT LEAST A 5' RADIUS CLEARANCE AROUND THE POLE, AND ACCESSIBLE TO A 10' RADIUS CLEARANCE FOR DPU-E WORKERS. ALL PARTS FOR FENCE MUST BE REMOVABLE IN THIS WORK ZONE.

REMOVABLE SECTIONS OF FENCE MUST BE INSTALLED WITH HINGE PINS AT ALL FOUR CORNERS OF THE FENCE. AN ALTERNATE METHOD COULD BE THE USE OF A "SADDLE" CONSTRUCTED OF MATERIALS SIMILAR TO THE MATERIAL OF WHICH THE FENCE IS CONSTRUCTED. ALL HARDWARE MUST BE EITHER GALVANIZED OR STAINLESS STEEL TO EXTEND LIFE OF STRUCTURE.

HANDLES MUST BE INSTALLED ON BOTH ENDS OF THE FENCE SECTION. THIS REQUIREMENT IS ONLY FOR WOOD FENCES.

SHOULD A GATE BE DESIRED RATHER THAN A REMOVABLE SECTION, THEN THE SAME CLEARANCES APPLY AS WELL AS CONSTRUCTION STANDARDS.

SHOULD YOU WANT TO SECURE YOUR PROPERTY DPU-E WILL PROVIDE A LOCK ONLY FOR DPU-E ACCESS.

NAPERVILLE PUBLIC UTILITIES DEPARTMENT	REMOVABLE SECTION CONSTRUCTION REQUIRMENTS	DATE: 02-28-97
ELECTRIC STANDARDS		PAGE 1 OF 1
		STD. NO. C10-2110

REV#	DATE	DESCRIPTION	REV BY	APPVD BY	REV#	DATE	DESCRIPTION	REV BY	APPVD BY

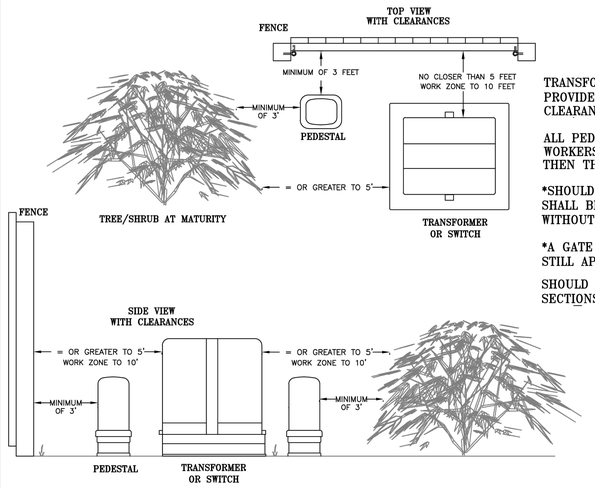

DPU-E CLEARANCE REQUIREMENTS:

TRANSFORMER AND SWITCHGEAR FRONTS MUST HAVE AT LEAST 10' OF CLEARANCE TO PROVIDE A SAFE WORK ZONE FOR DPU-E WORKERS. THE SIDES MUST MAINTAIN 5' OF CLEARANCE. THIS INCLUDES FENCES*, TREES, SHRUBS, POSTS, SHEDS, OR OBSTACLES.

ALL PEDESTALS MUST MAINTAIN AT LEAST 3' OF CLEARANCE AROUND IT FOR DPU-E WORKERS. IN THE EVENT THESE CLEARANCES CAN NOT BE MET BY THE CUSTOMER THEN THE STANDARD ABOVE WILL APPLY AND DPU-E WILL MAINTAIN THIS CLEARANCE.

*SHOULD A PORTION OF THE FENCE FALL INTO THE 10' WORK ZONE THEN THE FENCE SHALL BE CONSTRUCTED IN A MANNER SO A PORTION OF THE FENCE CAN BE REMOVED WITHOUT THE USE OF TOOLS. (SEE DPU-E STANDARD C10-2110 FOR DESIRED METHOD).

*A GATE MAY BE USED RATHER THAN A REMOVABLE SECTION. THE SAME CLEARANCES STILL APPLY IN THIS APPLICATION AS WELL AS THE CONSTRUCTION STANDARDS.

SHOULD YOU WANT TO SECURE YOUR PROPERTY (ONLY ON THESE REMOVABLE FENCE SECTIONS & GATES), DPU-E WILL PROVIDE A LOCK TO ALLOW FOR DPU-E ACCESS ONLY.

NAPERVILLE PUBLIC UTILITIES DEPARTMENT	PADMOUNT EQUIPMENT CLEARANCE REQUIREMENTS	DATE: 07-14-08
ELECTRIC STANDARDS		PAGE 1 OF 1
		STD. NO. C10-2130

REV#	DATE	DESCRIPTION	REV BY	APPVD BY	REV#	DATE	DESCRIPTION	REV BY	APPVD BY

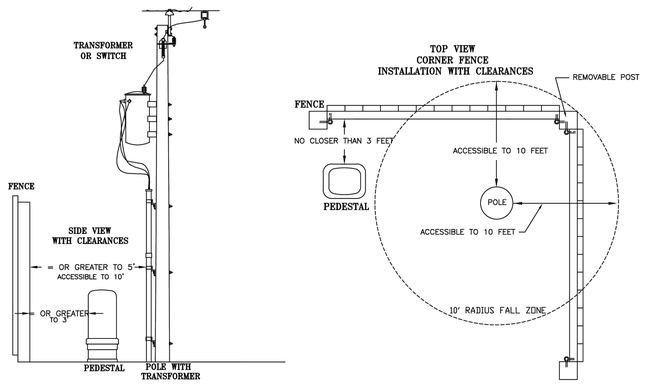

DPU-ELECTRIC RULES AND REGULATIONS:

UTILITY POLES MUST HAVE AT LEAST A 5' RADIUS CLEARANCE WITH ACCESSIBILITY TO A 10' RADIUS CLEARANCE FOR DPU-E WORKERS. ALL PEDESTALS MUST HAVE AT LEAST 3 FEET OF CLEARANCE.

SHOULD A PORTION OF THE FENCE FALL INTO THE 10' WORK ZONE THEN THE FENCE MUST BE CONSTRUCTED IN A MANNER SO THAT PORTION OF FENCE CAN BE REMOVED WITHOUT THE USE OF TOOLS. (SEE DPU-E STANDARD C10-2110 FOR DESIRED CONSTRUCTION METHOD).

A GATE MAY BE CONSTRUCTED RATHER THAN A REMOVABLE SECTION. THE SAME CLEARANCES STILL APPLY IN THIS APPLICATION AS WELL AS CONSTRUCTION STANDARDS.

SHOULD YOU WANT TO SECURE YOUR PROPERTY (ONLY ON THESE REMOVABLE SECTIONS AND GATES) DPU-E WILL PROVIDE A LOCK FOR DPU-E ACCESS ONLY.

NAPERVILLE PUBLIC UTILITIES DEPARTMENT	FENCE CLEARANCE REQUIRED FOR UTILITY POLES	DATE: 08-11-11
ELECTRIC STANDARDS		PAGE 1 OF 1
		STD. NO. C10-2140

REV#	DATE	DESCRIPTION	REV BY	APPVD BY	REV#	DATE	DESCRIPTION	REV BY	APPVD BY

NO.	REVISIONS	DATE	BY
1	REVISED PER SITE CHANGES	07/07/25	JTA
2	REVISED PER CITY	05/14/25	JTA
3	REVISED PER IDOT & CITY	04/10/25	JTA
4	REVISED PER CITY	03/07/25	INS
5	REVISED PER CITY	11/26/24	INS

Kimley»Horn

© 2024 KIMLEY-HORN AND ASSOCIATES, INC.

570 LAKE COOK ROAD, SUITE 200
DEERFIELD, IL 60015
PHONE: 847-405-2004
WWW.KIMLEY-HORN.COM

SCALE: AS NOTED
DESIGNED BY: JTA
DRAWN BY: TVC
CHECKED BY: INS

Casey's

CONSTRUCTION DETAILS - ELECTRIC

CASEY'S NAPERVILLE #6531

20 E. OGDEN AVE
NAPERVILLE, IL 60563

ORIGINAL ISSUE: 10/01/2024

KHA PROJECT NO. 168865042

SHEET NUMBER

C-608

Drawing name: K:\CHS_LDEV\168865042_Casey's_6531_Naperville_IL\2 Design\CAD\PlanSheets\C-609 CITY ELEC CONSTRUCTION DETAILS.dwg C-608 Jul 03, 2025 12:19pm by Jake.Antony
This document, together with the concepts and designs presented herein, as an instrument of service, is intended only for the specific purpose and client for which it was prepared. Reuse of and improper reliance on this document without written authorization and adaptation by Kimley-Horn and Associates, Inc. shall be without liability to Kimley-Horn and Associates, Inc.

Drawing name: k:\DHS_LDEV\168865042_Casey's_6531_Naperville_IL\2 Design\CAD\PlanSheets\C-600 IDOT CONSTRUCTION DETAILS.dwg C-609 Jul 03, 2025 - 12:19pm by: Jake Antony
This document, together with the concepts and designs presented herein, as an instrument of service, is intended only for the specific purpose and client for which it was prepared. Reuse of and improper reliance on this document without written authorization and adaptation by Kimley-Horn and Associates, Inc. shall be without liability to Kimley-Horn and Associates, Inc.

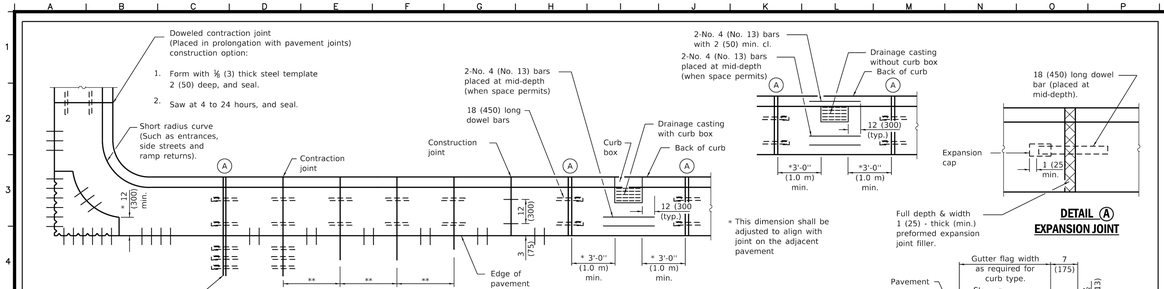

PLAN
ADJACENT TO PCC PAVEMENT OR PCC BASE COURSE

DETAIL Ⓐ
EXPANSION JOINT

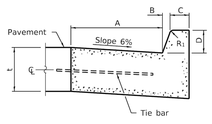

BARRIER CURB

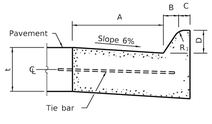

MOUNTABLE CURB

TABLE OF DIMENSIONS BARRIER CURB						
TYPE	A	B	C	D	R_1	
B-6.06 * (B-15.15)	6 (150)	1 (25)	6 (150)	6 (150)	1 (25)	
B-6.12 (B-15.3)	12 (300)	1 (25)	6 (150)	6 (150)	1 (25)	
B-6.18 (B-15.45)	18 (450)	1 (25)	6 (150)	6 (150)	1 (25)	
B-6.24 (B-15.60)	24 (600)	1 (25)	6 (150)	6 (150)	1 (25)	
B-9.12 (B-22.30)	12 (300)	2 (50)	5 (125)	9 (225)	1 (25)	
B-9.18 (B-22.45)	18 (450)	2 (50)	5 (125)	9 (225)	1 (25)	
B-9.24 (B-22.60)	24 (600)	2 (50)	5 (125)	9 (225)	1 (25)	

* For corner islands only.

TABLE OF DIMENSIONS MOUNTABLE CURB						
TYPE	A	B	C	D	R_1	R_2
M-2.06 (M-5.15)	6 (150)	2 (50)	4 (100)	2 (50)	3 (75)	2 (50)
M-2.12 (M-5.30)	12 (300)	2 (50)	4 (100)	2 (50)	3 (75)	2 (50)
M-4.06 (M-10.15)	6 (150)	4 (100)	3 (75)	4 (100)	3 (75)	NA
M-4.12 (M-10.30)	12 (300)	4 (100)	3 (75)	4 (100)	3 (75)	NA
M-4.18 (M-10.45)	18 (450)	4 (100)	3 (75)	4 (100)	3 (75)	NA
M-4.24 (M-10.60)	24 (600)	4 (100)	3 (75)	4 (100)	3 (75)	NA
M-6.06 (M-15.15)	6 (150)	6 (150)	2 (50)	6 (150)	2 (50)	NA
M-6.12 (M-15.30)	12 (300)	6 (150)	2 (50)	6 (150)	2 (50)	NA
M-6.18 (M-15.45)	18 (450)	6 (150)	2 (50)	6 (150)	2 (50)	NA
M-6.24 (M-15.60)	24 (600)	6 (150)	2 (50)	6 (150)	2 (50)	NA

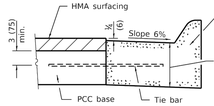

ADJACENT TO PCC BASE COURSE WITH HMA SURFACING

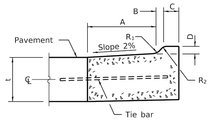

M-2.06 (M-5.15) and M-2.12 (M-5.30)

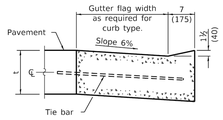

DEPRESSED CURB (TYPICAL)

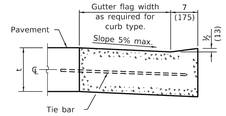

DEPRESSED CURB ADJACENT TO CURB RAMP ACCESSIBLE TO THE DISABLED

GENERAL NOTES

The bottom slope of combination curb and gutter constructed adjacent to pcc pavement shall be the same slope as the subbase or 6% when subbase is omitted.

t = Thickness of pavement.

Longitudinal joint tie bars shall be No. 6 (No. 19) at 36 (900) centers in accordance with details for longitudinal construction joint shown on Standard 420001.

A minimum clearance of 2 (50) between the end of the tie bar and the back of the curb shall be maintained.

The dowel bars shown in contraction joints will only be required for monolithic construction.

See Standard 606301 for details of corner islands.

All dimensions are in inches (millimeters) unless otherwise shown.

DATE	REVISIONS
1-1-22	Revised contraction joint spacing
	adjacent to pcc pavement.
1-1-18	Revised General Note for tie
	bar spacing to 36 (900) cts.

CONCRETE CURB TYPE B AND COMBINATION CONCRETE CURB AND GUTTER
(Sheet 1 of 2)

STANDARD 606001-08

Illinois Department of Transportation
PASSED January 1, 2022 — ENGINEER OF POLICY AND PROCEDURES
APPROVED January 1, 2022 — ENGINEER OF DESIGN AND ENVIRONMENT
ISSUED 1-1-07

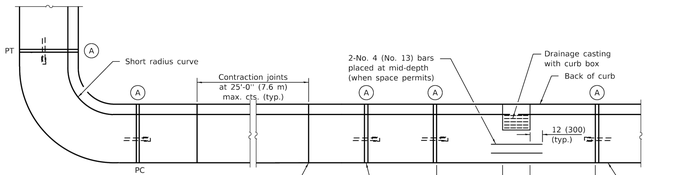

PLAN

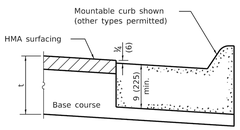

ON DISTURBED SUBGRADE

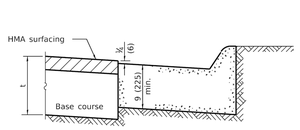

ON UNDISTURBED SUBGRADE

ADJACENT TO FLEXIBLE PAVEMENT

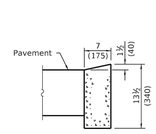

DEPRESSED CURB

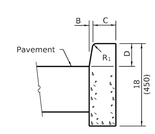

BARRIER CURB

ADJACENT TO FLEXIBLE PAVEMENT

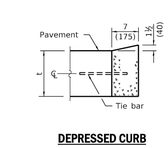

DEPRESSED CURB

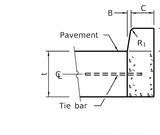

BARRIER CURB

ADJACENT TO PCC PAVEMENT OR PCC BASE COURSE

CONCRETE CURB TYPE B

Illinois Department of Transportation
PASSED January 1, 2022 — ENGINEER OF POLICY AND PROCEDURES
APPROVED January 1, 2022 — ENGINEER OF DESIGN AND ENVIRONMENT
ISSUED 1-1-07

DATE	REVISIONS
07/07/25	JTA
05/14/25	JTA
04/10/25	JTA
03/07/25	INS
11/26/24	INS
DATE	BY
1	REVISED PER SITE CHANGES
2	REVISED PER CITY
3	REVISED PER IDOT & CITY
4	REVISED PER CITY
NO.	REVISIONS

SCALE: AS NOTED
DESIGNED BY: JTA
DRAWN BY: TVC
CHECKED BY: INS

Kimley»Horn
© 2024 KIMLEY-HORN AND ASSOCIATES, INC.
570 LAKE COOK ROAD, SUITE 200
DEERFIELD, IL 60015
PHONE: 847-444-5700
WWW.KIMLEY-HORN.COM

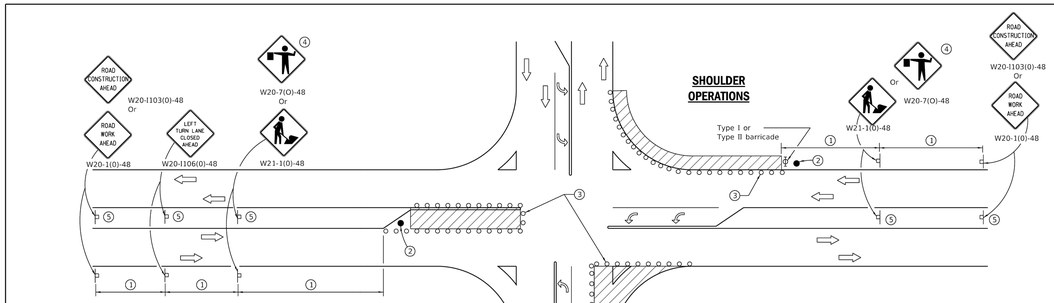

SIGN SPACING	
Posted Speed	Sign Spacing
55	500' (150 m)
50-45	350' (100 m)
<45	200' (60 m)

1. Refer to SIGN SPACING TABLE for distance.
2. Required for speed > 40 mph.
3. Cones at 25' (8 m) centers for 250' (75 m). Additional cones may be placed at 50' (15 m) centers. When drums or Type I or Type II barricades are used, the interval between devices may be doubled.
4. Use flagger sign only when flagger is present.
5. Omit this sign when median is less than 10' (3 m) or for bi-directional turn lanes.
6. Cones, drums or barricades at 20' (6 m) centers in taper.
7. Advanced arrow board required for speeds > 45 mph.
8. Three Type II barricades, drums or vertical barricades at 50' (15 m) centers.

SYMBOLS

- Work area
- Cone, drum or barricade
- Sign on portable or permanent support
- Arrow board
- Barricade or drum with flashing light
- Flagger with traffic control sign

GENERAL NOTES

This Standard is used where at any time, day or night, any vehicle, equipment, workers or their activities encroach on the pavement during shoulder operations or where construction requires lane closures in an urban area.

Calculate L as follows:

SPEED LIMIT	FORMULAS English	(Metric)
40 mph (70 km/h) or less:	$L=\frac{WS^2}{60}$	$L=\frac{WS^2}{150}$
45 mph (80 km/h) or greater:	L=(W)(S)	L=0.65(W)(S)

W = Width of offset in feet (meters).

S = Normal posted speed mph (km/h).

All dimensions are in inches (millimeters) unless otherwise shown.

DATE	REVISIONS
4-1-16	Corrected sign number for
	LEFT TURN LANE CLOSED
	AHEAD.
1-1-14	Added devices at arrow
	board upstream from taper.
	Rev. workers sign number.

URBAN LANE CLOSURE, MULTILANE INTERSECTION

STANDARD 701701-10

Illinois Department of Transportation
PASSED April 1, 2016 — ENGINEER OF SAFETY ENGINEERING
APPROVED April 1, 2016 — ENGINEER OF DESIGN AND ENVIRONMENT
ISSUED 1-1-97

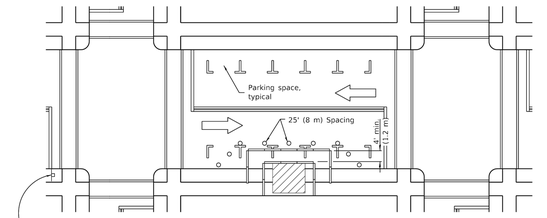

SIDEWALK DIVERSION

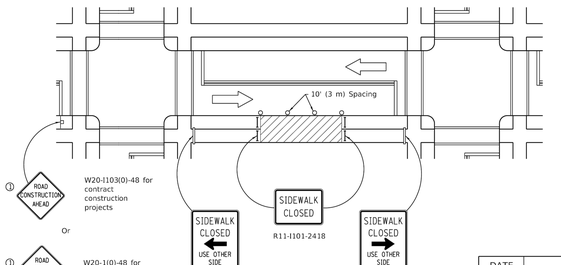

SIDEWALK CLOSURE

SYMBOLS

- Work area
- Sign on portable or permanent support
- Barricade or drum
- Cone, drum or barricade
- Type III barricade
- Detectable pedestrian channelizing barricade

GENERAL NOTES

This Standard is used where, at any time, pedestrian traffic must be rerouted due to work being performed.

This Standard must be used in conjunction with other Traffic Control & Protection Standards when roadway traffic is affected.

Temporary facilities shall be detectable and accessible.

The temporary pedestrian facilities shall be provided on the same side of the closed facilities whenever possible.

The SIDEWALK CLOSED / USE OTHER SIDE sign shall be placed at the nearest crosswalk or intersection to each end of the closure. Where the closure occurs at a corner, the signs shall be erected on the corners across the street from the closure. The SIDEWALK CLOSED signs shall be used at the ends of the actual closures.

Type III barricades and R11-2-4830 signs shall be positioned as shown in "ROAD CLOSED TO ALL TRAFFIC" detail on Standard 701901.

All dimensions are in (millimeters) unless otherwise shown.

DATE	REVISIONS
4-1-16	Omitted orange safety fence
	from standard as this is
	covered in the std. spec.
1-1-12	Added SIDEWALK DIVERSION.
	Modified appearance of
	plan views. Renamed Std.

SIDEWALK, CORNER OR CROSSWALK CLOSURE
(Sheet 1 of 2)

STANDARD 701801-06

Illinois Department of Transportation
PASSED April 1, 2016 — ENGINEER OF SAFETY ENGINEERING
APPROVED April 1, 2016 — ENGINEER OF DESIGN AND ENVIRONMENT
ISSUED 1-1-97

Casey's

IDOT CONSTRUCTION DETAILS

CASEY'S NAPERVILLE #6531
20 E. OGDEN AVE
NAPERVILLE, IL 60563

ORIGINAL ISSUE: 10/01/2024
KHA PROJECT NO. 168865042

SHEET NUMBER
C-609

Drawing name: K:\DHS_LDEV\168865042_Casey's_6531_Naperville_IL\2 Design\CAD\PlanSheets\C-600 IDOT CONSTRUCTION DETAILS.dwg C-610 Jul 03, 2025 12:19pm by: Jake.Antony
This document, together with the concepts and designs presented herein, as an instrument of service, is intended only for the specific purpose and client for which it was prepared. Reuse of and improper reliance on this document without written authorization and adaptation by Kimley-Horn and Associates, Inc. shall be without liability to Kimley-Horn and Associates, Inc.

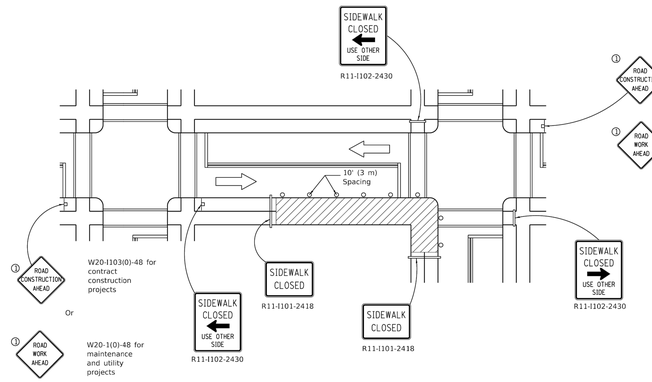

CORNER CLOSURE

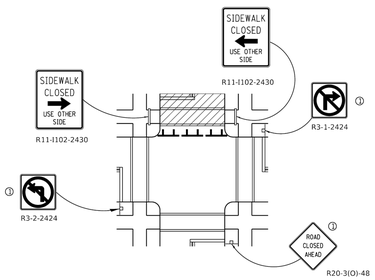

CROSSWALK CLOSURE

Illinois Department of Transportation
PASSED April 1, 2016
ENGINEER OF SAFETY ENGINEERING
APPROVED April 1, 2016
ENGINEER OF DESIGN AND ENVIRONMENT
BBS(ED 1-1-97

SIDEWALK, CORNER OR CROSSWALK CLOSURE

(Sheet 2 of 2)

STANDARD 701801-06

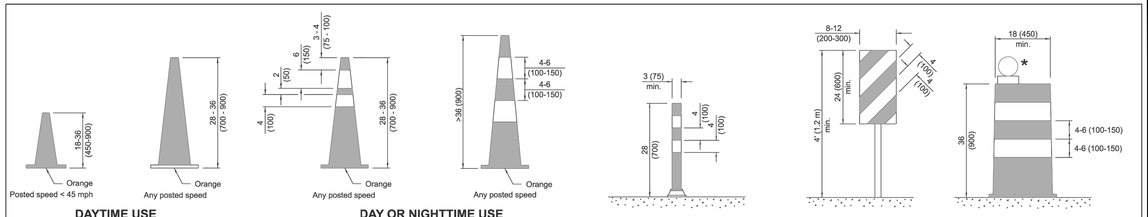

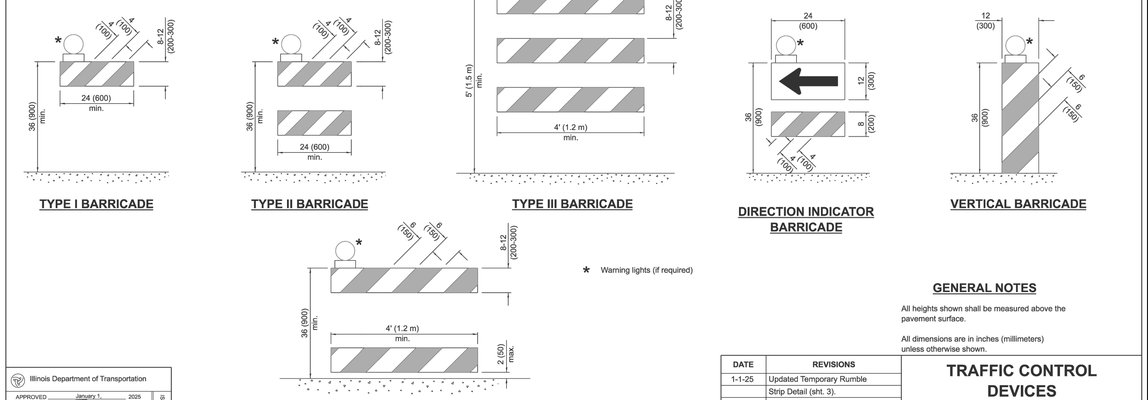

GENERAL NOTES

All heights shown shall be measured above the pavement surface.

All dimensions are in inches (millimeters) unless otherwise shown.

Illinois Department of Transportation
APPROVED January 1, 2025
ENGINEER OF SAFETY PROG. AND ENGINEERING
APPROVED January 1, 2025
ENGINEER OF DESIGN AND ENVIRONMENT
BBS(ED 1-1-13

DATE	REVISIONS
1-1-25	Updated Temporary Rumble
	Strip Detail (sht. 3).
1-1-24	Revised Type III Barricade notes
	(sht. 3) & moved warning light on
	post mounted signs to top center.

TRAFFIC CONTROL DEVICES

(Sheet 1 of 3)

STANDARD 701901-10

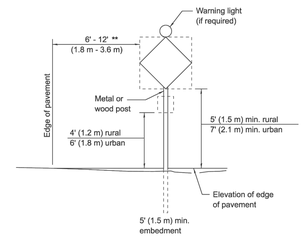

POST MOUNTED SIGNS

** When curb or paved shoulder are present this dimension shall be 24 (600) to the face of curb or 6' (1.8 m) to the outside edge of the paved shoulder.

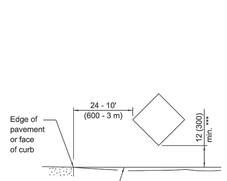

SIGNS ON TEMPORARY SUPPORTS

*** When work operations exceed four days, this dimension shall be 5' (1.5 m) min. If located behind other devices, the height shall be sufficient to be seen completely above the devices.

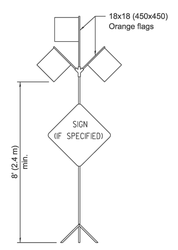

HIGH LEVEL WARNING DEVICE



WIDTH RESTRICTION SIGN

XX'-XX' width and X miles are variable.

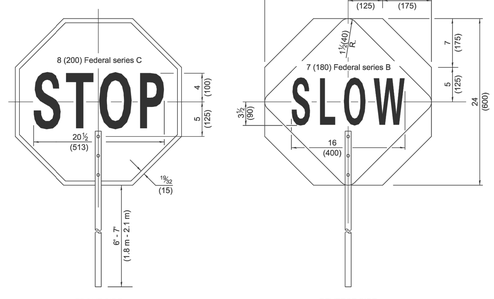

FLAGGER TRAFFIC CONTROL SIGN

ROAD CONSTRUCTION NEXT X MILES
G20-I104(0)-6036

END CONSTRUCTION
G20-I105(0)-6024

This signing is required for all projects 2 miles (3200 m) or more in length.

ROAD CONSTRUCTION NEXT X MILES sign shall be placed 500' (150 m) in advance of project limits.

END CONSTRUCTION sign shall be erected at the end of the job unless another job is within 2 miles (3200 m).

Dual sign displays shall be utilized on multi-lane highways.

WORK LIMIT SIGNING

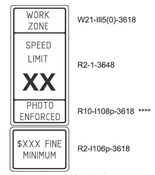

W21-II15(0)-3618
R2-1-3648
R10-I108p-3618 ****
R2-I106p-3618

Sign assembly as shown on Standards or as allowed by District Operations.

END WORK ZONE SPEED LIMIT G20-I103-6036

This sign shall be used when the above sign assembly is used.

HIGHWAY CONSTRUCTION SPEED ZONE SIGNS

**** R10-I108p shall only be used along roadways under the juristiction of the State.

Illinois Department of Transportation
APPROVED January 1, 2025
ENGINEER OF SAFETY PROG. AND ENGINEERING
APPROVED January 1, 2025
ENGINEER OF DESIGN AND ENVIRONMENT
BBS(ED 1-1-13

TRAFFIC CONTROL DEVICES

(Sheet 2 of 3)

STANDARD 701901-10

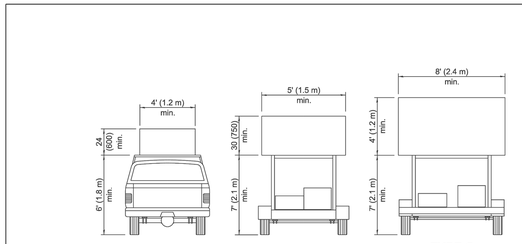

ARROW BOARDS

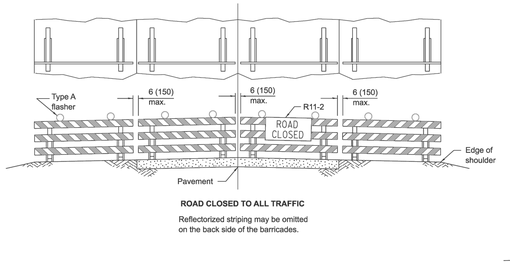

ROAD CLOSED TO ALL TRAFFIC

Reflectorized striping may be omitted on the back side of the barricades.

TYPICAL APPLICATIONS OF TYPE III BARRICADES CLOSING A ROAD

If a Type III barricade with an attached sign panel which meets NCHRP 350 or MASH is not available, the sign may be mounted on an NCHRP 350 or MASH temporary sign support directly in front of the barricade.

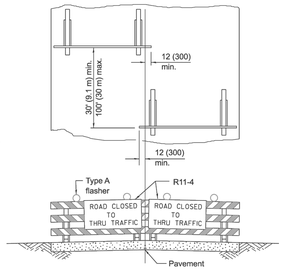

ROAD CLOSED TO THRU TRAFFIC

Reflectorized striping shall appear on both sides of the barricades.

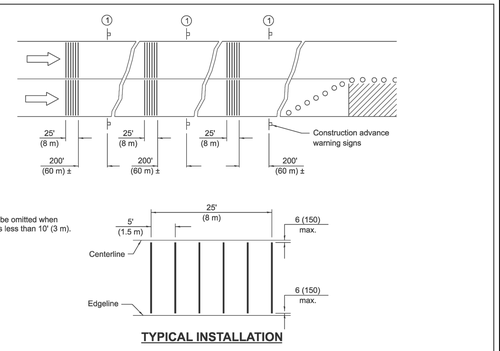

TYPICAL INSTALLATION

TEMPORARY RUMBLE STRIPS

TRAFFIC CONTROL DEVICES

(Sheet 3 of 3)

STANDARD 701901-10

NO.	REVISIONS	DATE	BY
1	REVISED PER SITE CHANGES	07/07/25	JTA
2	REVISED PER CITY	05/14/25	JTA
3	REVISED PER CITY	04/10/25	JTA
4	REVISED PER IDOT & CITY	03/07/25	INS
5	REVISED PER CITY	11/26/24	INS

Kimley»Horn

© 2024 KIMLEY-HORN AND ASSOCIATES, INC.

570 LAKE COOK ROAD, SUITE 200
DEERFIELD, IL 60015
PHONE: 847-520-9200
WWW.KIMLEY-HORN.COM

SCALE: AS NOTED
DESIGNED BY: JTA
DRAWN BY: TVC
CHECKED BY: INS

Casey's

IDOT CONSTRUCTION DETAILS

CASEY'S
NAPERVILLE #6531

20 E. OGDEN AVE
NAPERVILLE, IL 60563

ORIGINAL ISSUE: 10/01/2024

KHA PROJECT NO. 168865042

SHEET NUMBER

C-610

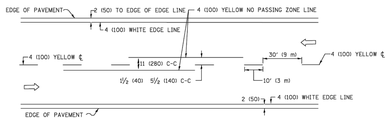

2-LANE ROADWAY

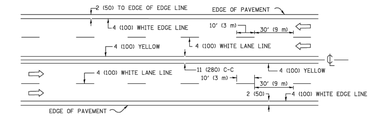

MULTI-LANE UNDIVIDED

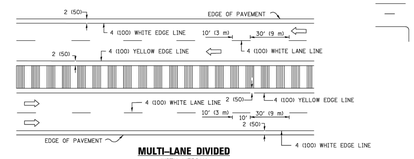

MULTI-LANE DIVIDED
WITH MEDIAN

TYPICAL LANE AND EDGE LINE MARKING

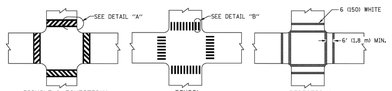



DETAIL "A" DETAIL "B"

TYPICAL CROSSWALK MARKING

✳ MARKINGS SHALL BE INSTALLED PARALLEL TO THE CENTERLINE OF THE ROAD WHICH IT CROSSES



4' (1.2 m) WIDE MEDIANS ONLY

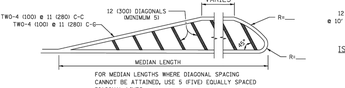

FOR MEDIAN LENGTHS WHERE DIAGONAL SPACING CANNOT BE ATTAINED, USE 5 (FIVE) EQUALLY SPACED DIAGONAL LINES.

DIAGONAL LINE SPACING: 50' (15 m) C-C (LESS THAN 30MPH (50 km/h))
75' (25 m) C-C 30MPH (50 km/h) TO 45MPH (70 km/h))
150' (45 m) C-C (MORE THAN 45MPH (70 km/h))

MEDIANS OVER 4' (1.2 m) WIDE

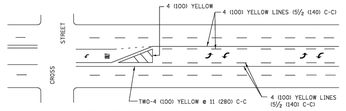

A MINIMUM OF TWO PAIRS OF TURN ARROWS SHALL BE USED, WHITE IN COLOR. ADDITIONAL PAIRS SHALL BE PLACED AT 200' (60 m) TO 300' (90 m) INTERVALS.

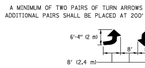

MEDIAN WITH TWO-WAY LEFT TURN LANE

TYPICAL PAINTED MEDIAN MARKING

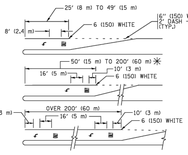

FULL SIZE LETTERS 8' (2,4 m) AND ARROWS SHALL BE USED.
↰ AREA = 15.6 SQ. FT. (1,5 m²) | ↥ AREA = 20.8 SQ. FT. (1,9 m²)

✳ TURN LANES IN EXCESS OF 400' (120 m) IN LENGTH MAY HAVE AN ADDITIONAL SET OF ARROW - "ONLY" INSTALLED MIDWAY BETWEEN THE OTHER TWO SETS OF ARROW - "ONLY".

TYPICAL LEFT (OR RIGHT) TURN LANE

TYPICAL TURN LANE MARKING

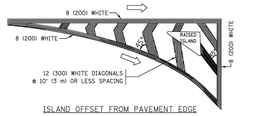

ISLAND OFFSET FROM PAVEMENT EDGE

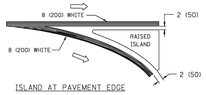

ISLAND AT PAVEMENT EDGE

TYPICAL ISLAND MARKING

TYPE OF MARKING	WIDTH OF LINE	PATTERN	COLOR	SPACING /REMARKS
CENTERLINE ON 2 LANE PAVEMENT	4 (100)	SKIP-DASH	YELLOW	10' (3 m) LINE WITH 30' (9 m) SPACE
CENTERLINE ON MULTI-LANE UNDIVIDED PAVEMENT	2 ⌀ 4 (100)	SOLID	YELLOW	11 (280) C-C
NO PASSING ZONE LINES FOR ONE DIRECTION FOR BOTH DIRECTIONS	4 (100) 2 ⌀ 4 (100)	SOLID SOLID	YELLOW YELLOW	5½ (140) C-C FROM SKIP-DASH CENTERLINE 11 (280) C-C OMIT SKIP-DASH CENTERLINE BETWEEN
LANE LINES	4 (100) 5 (125) ON FREEWAYS	SKIP-DASH SKIP-DASH	WHITE WHITE	10' (3 m) LINE WITH 30' (9 m) SPACE
DOTTED LINES (EXTENSIONS OF CENTER, LANE OR TURN LANE MARKINGS)	SAME AS LINE BEING EXTENDED	SKIP-DASH	SAME AS LINE BEING EXTENDED	2' (600) LINE WITH 6' (1,8 m) SPACE
EDGE LINES	4 (100)	SOLID	YELLOW-LEFT WHITE-RIGHT	OUTLINE MEDIANS IN YELLOW
TURN LANE MARKINGS	6 (150) LINES FULL SIZE LETTERS & SYMBOLS 18' (2,4m))	SOLID	WHITE	SEE TYPICAL TURN LANE MARKING DETAIL
TWO WAY LEFT TURN MARKING	2 ⌀ 4 (100) EACH DIRECTION 8' (2,4m) LEFT ARROW	SKIP-DASH AND SOLID IN PAIRS	YELLOW WHITE	10' (3 m) LINE WITH 30' (9 m) SPACE FOR SKIP-DASH& 5½ (140) C-C BETWEEN SOLID LINE AND SKIP-DASH LINE SEE TYPICAL TWO-WAY LEFT TURN MARKING DETAIL
CROSSWALK LINES (PEDESTRIAN) A. DIAGONALS (BIKE & EQUESTRIAN) B. LONGITUDINAL BARS (SCHOOL)	2 ⌀ 6 (150) 12 (300) ⌀ 45° 12 (300) ⌀ 90°	SOLID SOLID SOLID	WHITE WHITE WHITE	NOT LESS THAN 6' (1,8 m) APART 2' (600) APART 6' (1,8 m) APART SEE TYPICAL CROSSWALK MARKING DETAILS.
STOP LINES	24 (600)	SOLID	WHITE	PLACE 4' (1,2 m) IN ADVANCE OF AND PARALLEL TO CROSSWALK, IF PRESENT. OTHERWISE, PLACE AT DESIRED STOPPING POINT, PARALLEL TO CROSSROAD CENTERLINE, WHERE POSSIBLE
PAINTED MEDIANS	2 ⌀ 4 (100) WITH 12 (300) DIAGONALS @ 45° NO DIAGONALS USED FOR 4' (1,2 m) WIDE MEDIANS	SOLID	YELLOW= TWO WAY TRAFFIC WHITE= ONE WAY TRAFFIC	11 (280) C-C FOR THE DOUBLE LINE SEE TYPICAL PAINTED MEDIAN MARKING.
GORE MARKING AND CHANNELIZING LINES	8 (200) WITH 12 (300) DIAGONALS @ 45°	SOLID	WHITE	DIAGONALS: 15' (4,5 m) C-C (LESS THAN 30MPH (50 km/h)) 25' (8 m) C-C 30MPH (50 km/h) TO 45MPH (70 km/h) 30' (9 m) C-C (OVER 45MPH (70 km/h))
RAILROAD CROSSING	24 (600) TRANSVERSE LINES; "RR" IS 6' (1,8 m) LETTERS; (6 (400) LINE FOR "X"	SOLID	WHITE	SEE STATE STANDARD 780001 AREA OF: "R"=3,6 SQ. FT. (0,33 m²) EACH "X"=54,0 SQ. FT. (5,0 m²)
SHOULDER DIAGONALS (REQUIRED FOR SHOULDERS ≥ 8')	12 (300) ⌀ 45°	SOLID	WHITE - RIGHT YELLOW - LEFT	50' (15 m) C-C (LESS THAN 30MPH (50 km/h)) 75' (25 m) C-C 30 MPH (50 km/h) TO 45MPH (70 km/h) 150' (45 m) C-C (OVER 45MPH (70 km/h))
U TURN ARROW	SEE DETAIL	SOLID	WHITE	16.3 SF
2 ARROW COMBINATION LEFT AND U TURN	SEE DETAIL	SOLID	WHITE	30.4 SF

FOR FURTHER DETAILS ON PAVEMENT MARKING REFER TO STANDARD SPECIFICATIONS FOR ROAD AND BRIDGE CONSTRUCTION AND STATE STANDARD 780001.

All dimensions are in inches (millimeters) unless otherwise shown.

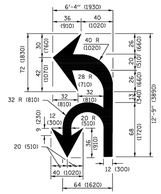

COMBINATION LEFT AND U-TURN

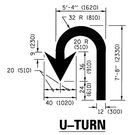

U-TURN

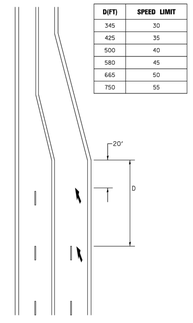

D(FT)	SPEED LIMIT
345	30
425	35
500	40
580	45
665	50
750	55

LANE REDUCTION TRANSITION

✳ LANE REDUCTION ARROWS REQUIRED AT SPEEDS OF 45 MPH OR GREATER OR WHEN SPECIFIED IN PLANS.

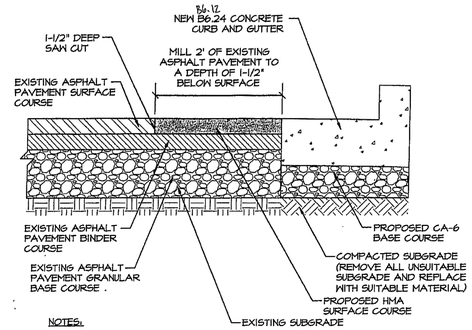

NOTES:
1. EXISTING PAVEMENT SECTION IS SHOWN FOR REFERENCE ONLY.
2. ALL ASPHALT PAVEMENT MILLINGS SHALL BE DISPOSED OF BY THE CONTRACTOR.
3. BITUMINOUS TACK COAT SHALL BE APPLIED AT A RATE OF 0.1 GALLONS PER SQUARE YARD TO BOTH THE EXISTING AND PROPOSED ASPHALT BINDER COURSE PRIOR TO NEW HMA SURFACE COURSE INSTALLATION.

DETAIL -
NOT TO SCALE

IDOT - PAVEMENT PATCHING AT CURB & GUTTER REMOVAL DETAIL
N.T.S.

FILE NAME = 20R0573-DTLS-01 - IDOT 06	USER NAME =	DESIGNED - GA	REVISED -
		CHECKED - WD	REVISED -
	PLOT SCALE =	DRAWN - ND	REVISED -
	PLOT DATE = 01-07-21	CHECKED - AG	REVISED -

STATE OF ILLINOIS
DEPARTMENT OF TRANSPORTATION

DISTRICT ONE
TYPICAL PAVEMENT MARKINGS

SCALE: | SHEET NO. 14 OF 19 SHEETS | STA. | TO STA.

F.A. RTE.	SECTION	COUNTY	TOTAL SHEETS	SHEET NO.
		WILL	19	14
	TC-13	CONTRACT NO. 61J100		
FED. ROAD DIST. NO.	ILLINOIS	FED. AID PROJECT		

NO.	REVISIONS	DATE	BY
1	REVISED PER CITY	11/26/24	INS
2	REVISED PER IDOT & CITY	03/07/25	INS
3	REVISED PER CITY	04/10/25	JTA
4	REVISED PER CITY	05/14/25	JTA
5	REVISED PER SITE CHANGES	07/07/25	JTA

Kimley»Horn
© 2024 KIMLEY-HORN AND ASSOCIATES, INC.
570 LAKE COOK ROAD, SUITE 200
DEERFIELD, IL 60015
PHONE: 847.520.9200
WWW.KIMLEY-HORN.COM

SCALE: AS NOTED
DESIGNED BY: JTA
DRAWN BY: TVC
CHECKED BY: INS

Casey's

IDOT CONSTRUCTION DETAILS

CASEY'S
NAPERVILLE #6531
20 E. OGDEN AVE
NAPERVILLE, IL 60563

ORIGINAL ISSUE: 10/01/2024
KHA PROJECT NO. 168865042

SHEET NUMBER
C-611

Drawing name: K:\DHS_LDEV\168865042_Casey's_6531_Naperville_IL\2 Design\CAD\FileSheets\C-600 IDOT CONSTRUCTION DETAILS.dwg C-611 Jul 03, 2025 12:20pm by: Jake.Antony
This document, together with the concepts and designs presented herein, as an instrument of service, is intended only for the specific purpose and client for which it was prepared. Reuse of and improper reliance on this document without written authorization and adaptation by Kimley-Horn and Associates, Inc. shall be without liability to Kimley-Horn and Associates, Inc.