Created: 3/31/2026
Last revised: 7/8/2026

PROPERTY ADDRESS:
27W240 AND 27W280 BAUER ROAD
NAPERVILLE, IL 60563

P.I.N.s
07-12-214-013
07-12-209-024

RETURN TO/PREPARED BY:
CITY OF NAPERVILLE
CITY CLERK'S OFFICE/
COMMUNITY SERVICES DEPARTMENT
400 SOUTH EAGLE STREET
NAPERVILLE, IL 60540

ANNEXATION AGREEMENT
FOR BAUER ROAD DUPLEXES

THIS ANNEXATION AGREEMENT ("**Agreement**") is entered between the CITY OF NAPERVILLE, an Illinois municipal corporation and home rule unit of local government under the statutes and Constitution of the State of Illinois, with offices at 400 South Eagle Street, Naperville, Illinois 60540, (hereinafter referred to as the "**CITY**") and Hawkeye Property Holdings LLC with offices at 522 N Washington Street, Naperville, IL 60563 (hereinafter referred to as the "**OWNER AND DEVELOPER**"). CITY AND OWNER AND DEVELOPER are together hereinafter referred to as the "**parties**" and sometimes individually as "**party**".

RECITALS

1. **WHEREAS**, the OWNER AND DEVELOPER is the owner of record of all of the real property legally described on **EXHIBIT A** and depicted on **EXHIBIT B** which property is contiguous to the CITY and not within the corporate limits of any municipality (hereinafter referred to as the "**SUBJECT PROPERTY**"); and

EXHIBIT C

2. **WHEREAS**, the OWNER AND DEVELOPER has signed and filed a Petition with the Naperville City Clerk for Annexation; Zoning to TU (Transitional Use District) upon annexation; approval of a preliminary/final plat of subdivision for Bauer Road Duplexes in order to subdivide the SUBJECT PROPERTY into three parcels (Lot 1, Lot 2, and Lot 3) to allow for the construction of three duplexes buildings; and a variance to Section 6-2-10:5 (Accessory Buildings, Structures and Uses of Land) to permit a maximum rear yard coverage of 45% instead of 25%; and

3. **WHEREAS**, all notices, publications, public hearings and all other matters attendant to such Petition for Annexation and Zoning, have been given, held or performed as required by statute or the CITY'S ordinances, regulations, and procedures; and

4. **WHEREAS**, the CITY'S corporate authorities have considered the annexation of the SUBJECT PROPERTY and have determined the Petition for Annexation and Zoning to be in order; and

5. **WHEREAS**, the OWNER AND DEVELOPER proposes that the SUBJECT PROPERTY be developed pursuant to the TU (Transitional Use) zoning classification(s) specified in the CITY'S Zoning Ordinance, and the terms and conditions set forth and referenced herein; and

6. **WHEREAS**, in addition to the matters specified above, the parties hereto have considered all other matters and hereby agree that the development of the SUBJECT PROPERTY for the uses permitted in the TU (Transitional Use) Zoning District of the CITY'S Zoning Ordinance and in accordance with the terms and conditions of this Agreement will inure to the benefit and improvement of the CITY and its residents, will promote the CITY'S sound planning and development, and will otherwise enhance and promote the general welfare of the CITY'S residents; and

7. **WHEREAS**, the CITY and the OWNER AND DEVELOPER have determined that the development of the SUBJECT PROPERTY should proceed as conveniently as possible and be subject to the ordinances, codes and regulations of the CITY, now in force and effect and as amended from time to time, unless specifically amended as part of the terms and conditions contained in this Agreement.

NOW THEREFORE, in consideration of the premises and the mutual promises contained herein, the parties agree that:

GENERAL CONDITIONS FOR

THE ANNEXATION OF THE SUBJECT PROPERTY

G1.0 RECITALS.

G1.1 The above-stated Recitals are a material part of this Agreement and are hereby incorporated in this Subsection G1.1 by reference.

G2.0 ANNEXATION AND ZONING.

G2.1 The SUBJECT PROPERTY shall be zoned as set forth in the Recitals and in the Special Conditions below.

G2.2 If this Agreement and the Ordinance approving this Agreement, and those ordinances pertaining to the SUBJECT PROPERTY which were approved by the CITY concurrently with this Agreement, are not recorded with the Office of the Recorder in the county in which the SUBJECT PROPERTY is located within the timeframe set forth in said Ordinance and ordinances, said Ordinance and ordinances, and all exhibits thereto, including but not limited to this Agreement, shall be automatically null and void without further action being taken by the City. OWNER AND DEVELOPER shall defend, indemnify, and hold the CITY and its officers, agents, and employees harmless for any error or omission in recording or for failure to timely record.

G2.3 Notwithstanding the area, lot, yard, and height standards contained in the Naperville Zoning Code for the zoning classification granted pursuant to this Agreement, after the fifth (5th) year after this Agreement is approved, if the SUBJECT PROPERTY is developed with any residential uses, the SUBJECT PROPERTY may only be developed with uses which comply with the density limitations specified in the then-current zoning classification applicable to the SUBJECT PROPERTY.

G3.0 ANNEXATION FEES.

G3.1 The OWNER AND DEVELOPER have paid all applicable annexation fees specified in Section S2.0 in accordance with Section 1-9E-1 of the Naperville Municipal Code.

G4.0 PARK DISTRICT ANNEXATION.

G4.1 The OWNER AND DEVELOPER have filed concurrently herewith a petition executed by OWNER AND DEVELOPER to annex the SUBJECT PROPERTY to the Naperville Park District. Said petition is conditional and not effective until annexation of the SUBJECT PROPERTY to the City of Naperville.

G5.0 TRANSPORTATION IMPACT FEES – INTENTIONALLY OMITTED.

G6.0 SIDEWALKS AND OTHER TRANSPORTATION RELATED PUBLIC IMPROVEMENTS.

G6.1 Prior to recordation of a Final Plat of Subdivision for any portion of the SUBJECT PROPERTY, the OWNER AND DEVELOPER shall, at their sole cost and expense, and at the discretion of the City Engineer:

1. construct sidewalks along the entire frontage of the SUBJECT PROPERTY adjacent to public right-of-way, as approved by the City Engineer; or
2. pay to the CITY the estimated cost to construct sidewalks along the entire frontage of the SUBJECT PROPERTY adjacent to public right-of-way. Upon payment, OWNER AND DEVELOPER shall have no further obligation to construct said sidewalk.

G7.0 UTILITY LINES AND EASEMENTS.

G7.1 The OWNER AND DEVELOPER shall grant to the CITY, at no cost to the CITY, any easements within the SUBJECT PROPERTY which the CITY may determine are necessary for the purposes of constructing, installing, replacing and maintaining sanitary sewers, water mains, electric service facilities, and other utilities necessary or incidental to service the SUBJECT PROPERTY.

G7.2 The CITY shall allow the OWNER AND DEVELOPER to use appropriate easements obtained by the CITY from other parties for the purpose of providing sanitary sewers, water mains and other utilities to service the SUBJECT PROPERTY.

G8.0 WATER SUPPLY AND DISTRIBUTION SYSTEM AND SANITARY SEWER COLLECTION SYSTEM.

G8.1 The OWNER AND DEVELOPER shall be solely responsible for the cost and expense incurred to extend the CITY'S water distribution system and sanitary sewer collection system to the SUBJECT PROPERTY. Payment shall be due at the time a building permit is issued if the CITY constructs and installs the proposed extension or any portion thereof.

G8.2 The CITY shall permit the connection of the structures reasonably contemplated to be built on the SUBJECT PROPERTY to the CITY'S water supply and distribution system and sanitary sewer collection system, and shall supply water and collection facilities thereto to the same extent as may be supplied to other structures and areas within the CITY.

G8.3 The OWNER AND DEVELOPER shall be responsible for the cost of all water lines and sanitary sewer lines and related appurtenances located on the SUBJECT PROPERTY.

G8.4 The OWNER AND DEVELOPER shall also be responsible to pay for all infrastructure availability charges, connection fees and user fees for the CITY'S water distribution system and sanitary sewer collection system as set forth in the CITY'S ordinances, rules, and regulations.

G9.0 WASTEWATER TREATMENT PLANT CAPACITY.

G9.1 The CITY guarantees that at the time building permits are requested, sufficient wastewater treatment plant capacity shall exist to provide complete and adequate wastewater treatment services for the SUBJECT PROPERTY without payment of any fees other than those specified in Subsection G9.2 of this Agreement.

G9.2 The OWNER AND DEVELOPER shall pay all applicable wastewater infrastructure availability charges, connection fees and customary wastewater user fees in accordance with Title 8 of the Naperville Municipal Code, as amended and any rules and regulations promulgated pursuant to Title 8.

G10.0 UTILITY OVERSIZING.

G10.1 The OWNER AND DEVELOPER shall construct and install at its sole cost and expense all water and sanitary sewer lines shown on the approved final engineering plans submitted for development of the SUBJECT PROPERTY.

G10.2 The CITY shall pay for oversized water or sanitary sewer lines constructed as required by the CITY in accordance with the provisions of this Section to provide for increased capacity, not merely to compensate for slope differential.

G10.3 Upon installation and acceptance by the CITY of said oversized lines, for residential lines, the CITY shall reimburse the OWNER AND DEVELOPER for the difference between the cost to construct an eight (8") inch line and the cost to construct the oversized line. For non-residential lines, the CITY shall reimburse the OWNER AND DEVELOPER for the difference between the cost to construct a twelve (12") inch line and the cost to construct the oversized line.

G10.4 All such oversized lines shall be constructed and installed in strict accordance with the provisions of Section 7-3-6 of the Naperville Municipal Code (Cost Sharing Policy), as amended.

G11.0 UTILITY REBATES, SPECIAL CONNECTION FEES, RECAPTURE FEES, SPECIAL ASSESSMENTS OR SPECIAL SERVICE AREAS TAXES.

G11.1 OWNER AND DEVELOPER shall pay any and all existing Utility Rebates, Special Connection Fees, Recapture Fees, Special Assessments, or Special Service Area Taxes when due as specified in Section S3.0.

G11.2 OWNER AND DEVELOPER shall further pay any and all future Utility Rebates, Special Connection Fees, Special Assessments, Recapture Fees, or Special Service Area Taxes, which may be properly and legally approved, established, or levied in the future. Notwithstanding the foregoing, this provision does not abrogate the right of any property owner to contest any Special Assessment or Special Service Area Tax.

G11.3 The sum of the monies to be paid pursuant to 70 ILCS 705/20(e)(1)-(5) as a result of disconnection of the SUBJECT PROPERTY from a fire protection district shall be the sole responsibility of the OWNER AND DEVELOPER which responsibility shall be deemed fulfilled upon payment of said sum to the CITY. Payment in full shall be paid prior to recordation of the ordinance approving annexation of the Subject Property to the CITY and prior to recordation of this Agreement. Failure or oversight to collect said sum shall not release the OWNER AND DEVELOPER from liability therefore. This provision shall survive the expiration or termination of this Agreement.

G11.4 The provisions of this Section G11.00 and each subpart hereof shall survive the expiration or termination of this Agreement.

G12.0 ELECTRICAL UTILITY SERVICE.

G12.1 The CITY shall connect the structures reasonably contemplated to be built on the SUBJECT PROPERTY to the CITY'S electrical utility system, and shall supply electrical service to those structures to the same extent service is provided on a regular basis to CITY'S other electric customers.

G12.2 The OWNER AND DEVELOPER shall accept all electrical power and energy required for the SUBJECT PROPERTY from the CITY'S electrical utility system at the time such service is available.

G12.3 The OWNER AND DEVELOPER shall pay all applicable connection fees, and costs related to on-site electrical distribution facilities and customary user fees in accordance with Title 8 of the Naperville Municipal Code.

G13.0 REFUSE AND WEED CONTROL.

G13.1 During all phases of construction, OWNER AND DEVELOPER shall provide a sufficient number of construction-sized dumpsters to contain all trash and debris generated throughout the entire area of the project.

G13.2 OWNER AND DEVELOPER shall prevent such containers from overflowing and shall prevent debris from blowing from the site by having the containers emptied as soon as reasonably possible once they are filled.

G13.3 During all phases of construction, OWNER AND DEVELOPER shall regularly cut all weeds and grass in excess of eight (8") inches high on the site and on the right-of-way adjacent to the site.

G14.0 CHANGES TO ORDINANCES AND REGULATIONS.

G14.1 If during the first five (5) years of the term of this Agreement, the provisions of the existing Naperville Zoning Code as it relates to the SUBJECT PROPERTY are amended to impose more stringent requirements in the subdivision, development, or construction on the SUBJECT PROPERTY, then such more stringent requirements shall not be effective as applied to the SUBJECT PROPERTY unless such change is agreed to by the parties hereto. This provision shall not apply to amendments to the Naperville Municipal Code related to conditional uses other than those conditional uses already approved by the Naperville Plan Commission for the SUBJECT PROPERTY.

G14.2 Except as provided in Subsections G14.2.1 and G14.2.2 and G14.2.3 of this Section, if, during the first two (2) years of the term of this Agreement, the provisions of CITY ordinances or regulations are amended or modified to impose more stringent requirements for the subdivision, or construction of the site development improvements for the SUBJECT PROPERTY than were in effect as of the date of approval of this Agreement, which improvements are specified in the submitted and approved Final Engineering Plans, such amendments or modifications shall not be effective as applied to the SUBJECT PROPERTY, unless such amendments are agreed to by the parties *or* such amendments are adopted to protect the health or safety of the CITY'S residents.

G14.2.1 Any ordinances, standards, or regulations which are the subject of the CITY'S Flood Plain or Stormwater Ordinances for either DuPage or Will County shall be exempt from the provisions of subsection G14.2.

G14.2.2 Any CITY ordinances establishing the payment of subdivision, or development fees, or any taxes, dedication requirements, or reimbursement for costs which may be applicable to the SUBJECT PROPERTY shall be exempt from the provisions of subsection G14.2.

G14.2.3 Any CITY Building, Fire or Life Safety Codes or ordinances or regulations approved after the date of approval of this Agreement shall be exempt from the provisions of G14.2

G14.3 If, during the term of this Agreement, any existing, amended, modified or new ordinances, codes or regulations affecting the zoning, subdivision, development, construction of any improvements, buildings, appurtenances, or any other development of any kind or character upon the SUBJECT PROPERTY, other than those upon which site plan approval may be based, are amended or modified to impose less restrictive requirements on development or construction upon properties situated within the CITY'S boundaries, then the benefit of such less restrictive requirements shall inure to the benefit of the OWNER AND DEVELOPER, and anything to the contrary contained herein notwithstanding, the OWNER AND DEVELOPER may proceed with development or construction upon the SUBJECT PROPERTY pursuant to the less restrictive amendment or modification applicable generally to all properties within the CITY.

G15.0 EXISTING STRUCTURES.

G15.1 At the time this Agreement is fully executed by the parties hereto, where there are any structures on the SUBJECT PROPERTY:

G15.1.1 A City of Naperville street address shall be assigned to the SUBJECT PROPERTY in accordance with Section 9-2-2 of the Naperville Municipal Code, as amended from time to time within thirty (30) days after this Agreement is fully executed by the parties hereto.

G15.1.2 Any existing structures on the SUBJECT PROPERTY shall be fully accessible for emergency vehicles, including two (2) points of access, and any "Special Conditions for the Annexation of The SUBJECT PROPERTY" set forth below ("Special Conditions").

G15.2 At the time this Agreement is fully executed by the parties hereto, any existing structures on the SUBJECT PROPERTY which fail to conform to the requirements of the CITY'S duly adopted Building and Fire Prevention Codes, as amended from time to time, shall be brought into conformity with such requirements pursuant to any Special Conditions set forth below.

G16.0 EFFECT OF THIS AGREEMENT.

G16.1 Except as provided in Section G14.0 of this Agreement, if any relevant existing CITY resolution, ordinance, regulations, or interpretation thereof, is inconsistent with or conflicts with any provision of this Agreement, then the provisions of this Agreement shall supersede the terms of said inconsistent resolutions, ordinances, or regulations as they may be applicable to the SUBJECT PROPERTY.

G17.0 NO DISCONNECTION OR DEANNEXATION.

G17.1 Neither OWNER AND DEVELOPER nor any of their successors in interest shall file, cause to be filed, or take any action that would result in the disconnection or deannexation of the SUBJECT PROPERTY from the CITY during the term of this Agreement.

G18.0 MODIFICATIONS TO THIS AGREEMENT.

G18.1 If the OWNER AND DEVELOPER or the CITY wish to modify this Agreement, the CITY shall hold the necessary public hearings.

G18.2 Such hearings shall be held and an approval granted or denial given without unreasonable delay after the request is made.

G18.3 This Section shall not be construed to require the CITY to modify this Agreement.

G18.4 Any such amendment or modification may be made only as to a portion of the SUBJECT PROPERTY, or as to the provisions applying exclusively thereto, and may be without the consent of the owners of other portions of the SUBJECT PROPERTY not affected by the amendment or modification.

G19.0 BINDING EFFECT AND TERM.

G19.1 The parties intend that the terms and conditions of this Agreement shall be a covenant running with the land and shall be recorded against the title of the SUBJECT PROPERTY in the Office of the Recorder of the county in which the SUBJECT PROPERTY is located, and shall be binding upon and inure to the benefit of the parties hereto and all, grantees, successors in interest, assignees, heirs, executors, or lessees (whether their interest is in the SUBJECT PROPERTY as a whole or in any portion or aspect thereof), and upon any successor CITY officials and successor municipalities for a period of ten (10) years from the EFFECTIVE DATE of this Agreement.

G19.2 The zoning classification for the SUBJECT PROPERTY established by this Agreement shall survive the expiration or termination of this Agreement unless changed in accordance with applicable law.

G19.3 Any obligation owed by OWNER AND DEVELOPER for payment or reimbursement of monies provided for herein shall survive the termination or expiration of this Agreement.

G19.4 Any obligations to be performed hereunder by OWNER AND DEVELOPER shall survive the expiration or termination of this Agreement.

G20.0 CONTINUING RESPONSIBILITY.

G20.1 Except as otherwise provided herein, if the OWNER AND DEVELOPER sells or conveys all or any portion of the SUBJECT PROPERTY during the term of this Agreement, all of the OWNER AND DEVELOPER'S obligations specified in this Agreement shall devolve upon and be assumed by such purchaser, grantee, or successor in interest, and the OWNER AND DEVELOPER shall be released from such obligations, provided the conditions of subsection G20.2 of this Agreement have been met.

G20.2 No sale or conveyance shall be effective to release the OWNER AND DEVELOPER from the obligations imposed by this Agreement until the purchaser or grantee has posted good and sufficient surety, as determined by the CITY, to secure the performance of all of the OWNER AND DEVELOPER'S obligations contained in this Agreement and as required by CITY ordinance, policy, or regulation.

G20.3 Any provision contained in this Agreement which provides for payment or reimbursement of money to the CITY, and/or which provides for the dedication or conveyance of property to the CITY, shall survive the expiration or termination of this Agreement.

G21.0 SEVERABILITY.

G21.1 If any of the provisions of this Agreement are determined by a court of competent jurisdiction to be invalid, such provisions shall be deemed to be stricken, and such adjudication shall not affect the validity of the remainder of the terms of this Agreement as a whole or of any section, subsection, sentence or clause not adjudged to be invalid.

G21.2 The invalidity of any such provision shall not affect any zoning classification for the SUBJECT PROPERTY that has been approved by the CITY pursuant to the provisions of the CITY'S ordinances and regulations. Any change to such zoning classification shall take place only in accordance with applicable statutes and ordinances.

G22.0 NOTICES.

G22.1 Any notice or demand hereunder from one party to another party or to an assignee or successor in interest of either party or from an assignee or successor in interest of either party to another party, or between assignees or successors in interest of either party shall be in writing and shall be deemed duly served if mailed by prepaid registered or certified mail addressed to the parties specified in Section S4.0 or any individual or entity substituted according to subsection G22.2 of this Agreement.

G22.2 The parties, or any assignee or successor in interest, may substitute names and addresses for notices as appropriate.

G23.0 GOVERNING LAW AND VENUE.

G23.1 This Agreement shall be governed by the laws of the State of Illinois both as to interpretation and performance, and any legal proceeding of any kind arising from this Agreement shall be filed in the Circuit Court for the Eighteenth Judicial Circuit, DuPage County, Illinois.

G24.0 FORCE MAJEURE.

G24.1 Subject to the provisions of G24.2 whenever a period of time is provided for in this Agreement for either the CITY or OWNER AND DEVELOPER to do or perform any act or obligation, neither party shall be liable for any delays or inability to perform due to causes beyond the control of said party such as war, riot, strike or lockout by or against either party's own employees or suppliers, unavoidable casualty or damage to personnel, materials or equipment, pandemics, systemic supply-chain interruptions, fire, flood, storm, earthquake, tornado or any act of God ("Events of Force Majeure").

G24.2 Provided, however, that said time period shall be extended for only the actual amount of time said party is directly delayed by one or more Events of Force Majeure. Except as to a strike or lockout by or against either party's own employees or suppliers, an act or omission shall not be deemed to be beyond OWNER AND DEVELOPER'S control if committed, omitted or caused by OWNER AND DEVELOPER, OWNER AND DEVELOPER'S employees, officers or agents or a subsidiary, affiliate or parent of OWNER AND DEVELOPER or by any corporation or other business entity that holds a controlling interest in OWNER AND DEVELOPER, whether held directly or indirectly.

G25.0 ENFORCEABILITY.

G25.1 This Agreement shall be enforceable by any of the parties hereto by any appropriate action at law or in equity to secure the performance of the covenants and terms of this Agreement including but not limited to enforcement of any violation hereof as an ordinance violation which may be prosecuted in accord with the Naperville Municipal Code as amended from time to time. In the event that the CITY seeks enforcement of any aspect of this Agreement in a court of competent jurisdiction, and prevails in whole or in part in such action, the OWNER AND DEVELOPER shall reimburse the CITY for its costs and expenses, including but not limited to reasonable attorneys' fees (in-house or outside counsel) within thirty (30) days of receipt of an invoice therefor.

G26.0 CHALLENGE TO ANNEXATION.

G26.1 If the annexation of the SUBJECT PROPERTY is challenged in any court of legal jurisdiction, the parties to this Agreement agree to cooperate to defend the validity of said annexation. OWNER AND DEVELOPER agrees to hold the CITY harmless and to reimburse the CITY for any and all expenses incurred by the CITY for said defense including but not limited to

reimbursement for any services of outside legal counsel. If the annexation of the SUBJECT PROPERTY is challenged and is held to be invalid: (a) any real estate taxes which have been paid to the CITY shall not be rebated to the OWNER AND DEVELOPER, or its successors and assigns; and (b) the CITY shall enter into a separate written service agreement with the OWNER AND DEVELOPER, or its successor and assigns, so as to provide utility service to the SUBJECT PROPERTY in accordance with the general terms of this Agreement to the extent permitted by law.

G27.0 TIMING OF GRANTS OF PROPERTY INTERESTS.

G27.1 When any dedication of right-of-way, grant of easement, or other dedication or grant of property interests to the CITY is provided for in this Agreement, said dedication or grant shall occur prior to, or simultaneously with, the recording of any final plat of subdivision or issuance of any permit, whichever occurs first.

G27.2 Failure to comply with the timing requirements set forth in this Section shall not relieve the OWNER AND DEVELOPER of the obligations set forth in this Section, and the provisions of this Section shall survive the expiration or termination of this Agreement.

G28.0 NON-WAIVER OF RIGHTS.

G28.1 No failure of either Party to exercise any power given to it hereunder or to insist upon strict compliance by the other party with its obligations hereunder, and no custom or practice of the Parties at variance with the terms hereof, nor any payment under this Agreement shall constitute a waiver of either party's right to demand compliance with the terms hereof.

G29.0 CAPTIONS AND PARAGRAPH HEADINGS.

G29.1 Captions and paragraph headings are for convenience only and are not a part of this Agreement and shall not be used in construing it.

G30.0 ENTIRE AGREEMENT.

G30.1 This Agreement sets forth all the covenants, conditions and promises between the Parties with regard to the subject matter set forth herein and there are no covenants, promises, agreements, conditions or understandings between the Parties, either oral or written, other than those contained in this Agreement.

G31.0 AUTHORIZATIONS.

G31.1 If this Agreement is signed by other than the OWNER AND DEVELOPER, the OWNER AND DEVELOPER'S authorized representatives who have executed this Agreement warrant that they have been lawfully authorized by the OWNER AND DEVELOPER to execute this Agreement on its behalf. The Mayor and City Clerk warrant that they have been lawfully authorized to execute this Agreement. If OWNER AND DEVELOPER is an entity and not one or more individuals, the OWNER AND DEVELOPER shall deliver to the CITY within ten (10) days of the EFFECTIVE DATE on page 1 of this Agreement copies of all articles of incorporation, bylaws, resolutions, ordinances or other documents which evidence their legal authority to execute this Agreement.

G32.0 SURETY.

G32.1 All public improvements required to be done by the OWNER AND DEVELOPER for any phase of the SUBJECT PROPERTY shall be secured by a cash deposit or Letter of Credit in a form approved by the City Attorney, in an amount approved by the City Engineer, and in compliance with the Naperville Municipal Code. This provision shall apply whether or not a Letter of Credit is specified for each improvement. As to any surety or maintenance surety provided by the OWNER AND DEVELOPER to the CITY for public improvements related to development of the SUBJECT PROPERTY, OWNER AND DEVELOPER agrees that: (1) at no time shall the CITY be liable for attorneys' fees with respect thereto; (2) OWNER AND DEVELOPER shall be liable to pay the CITY'S reasonable attorneys' fees and costs (in-house or outside counsel) in enforcement thereof; and (3) the list of circumstances set forth in such surety (including any exhibit thereto) as bases for default thereunder shall entitle the CITY to draw on said surety. Notwithstanding provision of said surety, until the public improvements have been accepted by the CITY, the OWNER AND DEVELOPER shall remain obligated for completion of said public improvements and/or (at the CITY'S sole discretion) to pay any costs for said public improvements to the extent that the surety is not sufficient to pay for the costs of the public improvements, or in the event of any denial, or partial denial, of coverage by the surety, or failure of the surety to timely respond to a demand for payment. The provisions set forth in this Section G32 shall survive the expiration or termination of this Agreement.

G33.0 ACCEPTANCE OF PUBLIC IMPROVEMENTS.

G33.1 Subject to approval by the City Engineer, the CITY shall accept public improvements installed by the OWNER AND DEVELOPER on the SUBJECT PROPERTY, or within the adjacent public right-of-way, pursuant to the process set forth in Section 7-1-7 of the Naperville Municipal Code. Upon CITY acceptance thereof, the OWNER AND DEVELOPER shall post a cash deposit or letter of credit in a form and amount approved by the City guaranteeing said improvements against defects in materials or workmanship in the amount of ten percent (10%) of the estimated cost of said improvement to be effective for a period of one year from the date of acceptance.

G34.0 EXHIBITS INCORPORATED.

G34.1 All exhibits attached or referenced herein are incorporated herein by reference and made part hereof.

G35.0 AMBIGUITY.

G35.1 If any term of this Agreement is ambiguous, it shall not be construed for or against any party on the basis that the party did or did not write it.

G36.0 RECAPTURE AGREEMENTS.

G36.1 If, pursuant to the terms of this Agreement, the OWNER AND DEVELOPER installs improvements, including but not limited to water distribution system improvements, sanitary sewer collection system improvements, storm sewer system improvements, roadway improvements, or other improvements (hereinafter "Improvements") which the OWNER AND DEVELOPER and the CITY reasonably determine will benefit properties other than the SUBJECT PROPERTY, the OWNER AND DEVELOPER may submit a request to the City Engineer for the City to enter into a recapture agreement ("Recapture Agreement"). The OWNER AND DEVELOPER'S request must be accompanied by a draft of the proposed Recapture Agreement and documentation, to the satisfaction of the City Engineer, clearly demonstrating the "as built" costs of the Improvements for which recapture is sought. The proposed Recapture Agreement shall identify the benefitting properties and recapture amounts, which shall be subject to approval of the City Engineer. Subject to approval of the proposed Recapture Agreement by the City Engineer, approval of the form of the Recapture Agreement by the City Attorney, and any notice to be given to the benefiting property owners, the matter shall be scheduled for consideration by the Naperville City Council. If an ordinance approving the

Recapture Agreement is passed by City Council, the Recapture Agreement shall be recorded against the title of the benefiting properties identified in the Recapture Agreement.

G36.1.1 If a proposed Recapture Agreement and supporting documentation are not provided to the City Engineer within twelve (12) months from completion of the Improvements by the OWNER AND DEVELOPER and approval of said Improvements by the City Engineer or the City Engineer's designee, or within such other timeframe as may be agreed to in writing by the City Engineer, the CITY shall no longer have any obligation to enter into a recapture agreement for Improvements hereunder.

G37.0 DESIGNEES INCLUDED.

G37.1 Whenever the title of a position of a City employee or official is used in this Agreement relative to an action being taken or an approval being given (e.g. Zoning Administrator, City Engineer, Director of Department of Public Utilities), the individual's designee shall automatically be included therein.

G38.0 REMEDIES CUMULATIVE.

G38.1 The rights and remedies of the parties to this Agreement, whether provided by law and/or specified in this Agreement, shall be cumulative, and the specification or exercise of any one or more of such remedies shall not preclude the exercise by such party, at that time or different times, of any other such remedies as that party deems appropriate.

G39.0 ONGOING COMPLIANCE.

G39.1 Except as set forth in Section G14 and G16 hereof, in the development and operation of the SUBJECT PROPERTY, the OWNER AND DEVELOPER shall be subject to and shall comply with: (i) the terms of this Agreement; (ii) the provisions of the Naperville Municipal Code, as amended from time to time, including but not limited to Title 5 (Building Regulations) and Title 6 (Zoning Regulations); (iii) all ordinances and resolutions passed or adopted by the Naperville City Council related to the SUBJECT PROPERTY; (iv) building permits issued by the CITY for the SUBJECT PROPERTY prior to construction; and (v) all applicable laws and regulations.

G40.0 COUNTERPARTS. For convenience, this Agreement may be executed in any number of counterparts, each of which shall be deemed to be an original and all of such counterparts when taken together shall constitute but one and the same document which shall be sufficiently evidenced by any such counterpart.

SPECIAL CONDITIONS FOR THE ANNEXATION OF THE SUBJECT PROPERTY

To the extent that there is any inconsistency between the terms or conditions of the following Special Conditions and the General Conditions above, the terms and conditions set forth in the Special Conditions of this Agreement shall prevail. To the extent that provisions in the Special and General Conditions are not inconsistent, they shall be read together.

S1.0 ANNEXATION AND ZONING.

S1.1 The Zoning Classification for the SUBJECT PROPERTY determined in accordance with Title 6 of the Naperville Municipal Code shall be TU (Transitional Use) Zoning District.

S1.2 A plat of annexation prepared by Civil and Environmental Consultants, Inc., dated November 10, 2025, last revised January 22, 2026, which conforms with the statutory requirements is attached hereto and incorporated herein by reference as **EXHIBIT B.**

S2.0 ANNEXATION FEES.

S2.1 The Annexation Fee calculated in accordance with Section 1-9E-1 of the Naperville Municipal Code for the SUBJECT PROPERTY is $4,000.

S3.0 UTILITY REBATES, SPECIAL CONNECTION FEES, RECAPTURE FEES, SPECIAL ASSESSMENTS OR SPECIAL SERVICE AREAS TAXES.

S3.1 There are currently no Utility Rebates, recapture fees, special assessments, or special service areas, recorded against the SUBJECT PROPERTY.

S3.2 Notwithstanding the provisions of Section G11.3 herein, since the SUBJECT PROPERTY is located within the Naperville Fire Protection District, and prior to annexation was served by the Naperville Fire Department, the OWNER AND DEVELOPER has no obligation to make payment pursuant to 70 ILCS 705/20(e)(1)-(5).

S4.0 ADDRESSES FOR NOTICES REQUIRED BY THIS AGREEMENT.

IF TO THE CITY:

City Clerk, City of Naperville
400 South Eagle Street
Naperville, Illinois 60540

WITH COPIES TO:
City Attorney, City of Naperville
400 South Eagle Street
Naperville, Illinois 60540

IF TO THE OWNER AND DEVELOPER:
Hawkeye Property Holdings LLC
522 N Washington Street
Naperville, IL 60563

WITH COPIES TO:
Rosanova & Whitaker, Ltd.
Attn: Russ Whitaker
445 Jackson Ave, Suite 200
Naperville, IL 60540

S5.0 FIRE CODES AND REGULATIONS.

S5.1 The provisions of Section G14.0 this Agreement notwithstanding, any amendments to the CITY'S Building, Fire, or Life Safety Codes or regulations approved and enacted after the EFFECTIVE DATE of this Agreement shall be applicable to the SUBJECT PROPERTY without exception.

S6.0 EMERGENCY ACCESS.

S6.1 OWNER AND DEVELOPER agrees to construct, at OWNER AND DEVELOPER'S cost, two points of access for emergency vehicles when construction begins; said accesses will be maintained until the roadways are completed. Said emergency access shall consist of a hard surface with binder course and a minimum structural number of 2.36.

S7.0 SCHOOL AND PARK DONATIONS.

S7.1 The SUBJECT PROPERTY was previously improved with one (1) three-bedroom single-family residence. Said single-family residence has been demolished prior to annexation as approved by DuPage County. As part of the annexation request to the City of Naperville, OWNER AND DEVELOPER proposed to subdivide the SUBJECT PROPERTY into three lots in order to allow for the construction of three duplex buildings for a total of six dwelling units. Each dwelling unit will have three (3) bedrooms within each unit. Accordingly, the OWNER AND DEVELOPER shall pay the required School and Park Donations as specified as in this Section 7 and each subsection hereof.

S7.2 School Donation: $28,678.83 (based on three (3) three-bedroom duplexes with a credit for one (1) three-bedroom single family residence), in accordance with the School Donation table attached hereto and incorporated herein by reference as **EXHIBIT C** ("**School Donation Table**"). OWNER AND DEVELOPER acknowledges that the required school donation amount is calculated based on Section 7-3-5 (Dedication of Park Lands and School Sites or For Payments or Fees in Lieu Of) of the Naperville Municipal Code. OWNER AND DEVELOPER has elected to pay a cash-in-lieu fee pursuant to the "Estimated Lump Sum Payment" provisions set forth in Section 7-3-5:5.2.1 and Subsection 5:5.2.1.1 of the Naperville Municipal Code, as amended from time to time. Therefore, OWNER AND DEVELOPER shall receive a school and park donation credit for one (1) three-bedroom single family residence.

S7.3 Park Donation: $40,773.60 (based on three (3) three-bedroom duplexes with a credit for one (1) three-bedroom single family residence), in accordance with the Park Donation table attached hereto and incorporated herein by reference in **EXHIBIT D** ("**Park Donation Table**"). OWNER AND DEVELOPER acknowledges that the required park donation amount is calculated based on Section 7-3-5 (Dedication of Park Lands and School Site or For Payments or Fees in Lieu Of) of the Naperville Municipal Code. OWNER AND DEVELOPER has elected to pay a cash-in-lieu fee pursuant to the "Estimated Lump Sum Payment" provisions set forth in Section 7-3-5:5.2.1 and Subsection 5:5.2.1.1 of the Naperville Municipal Code, as amended from time to time. Therefore, OWNER AND DEVELOPER shall receive a school and park donation credit for one (1) three-bedroom single family residence.

S7.4 OWNER and DEVELOPER agrees that payment of the school and park donation amounts established herein shall not be paid under protest, or otherwise objected to, and shall be paid prior to recording the Preliminary/Final Subdivision Plat for the SUBJECT PROPERTY. OWNER and DEVELOPER further acknowledges that the school and park donation established in Section S7.2 and Section S7.3 above will be verified at the time of each building permit issuance, and if the number of bedrooms in any dwelling unit exceeds 3 bedrooms, then the permit applicant shall be charged for additional bedrooms, in accordance with the school and park donation table contained in the Naperville Municipal Code in effect at the time the building permit is issued.

S7.5 The provisions set forth in this Section 7, and each subpart hereof, shall survive the expiration or termination of this Agreement.

S8.0 SIDEWALKS.

S8.1 The OWNER AND DEVELOPER agrees to install public sidewalk, at the OWNER AND DEVELOPER'S sole cost, across the Bauer Road frontage of the SUBJECT PROPERTY prior to issuance of the final occupancy permit or within three (3) years after annexation of the SUBJECT PROPERTY or whichever is sooner. An extension of this timeframe may be granted in writing at the discretion of the City Engineer. This provision shall survive the expiration or termination of this Agreement.

S9.0 PARK DISTRICT ANNEXATION

S9.1 Notwithstanding the provisions of Section G4.0, the SUBJECT PROPERTY is currently within the boundary of the Naperville Park District; annexation to the Park District is not required.

S10.0 ROAD IMPROVEMENT FEE

S10.1 The OWNER AND DEVELOPER, will be widening the previously unimproved portion of the roadway along Bauer Road and installing curb and gutter as depicted on the Final Engineering Plans attached hereto as **EXHIBIT E** ("**Final Engineering Plans**"). The OWNER AND DEVELOPER is required to complete these improvements, at their sole cost, prior to approval of a site final inspection by the CITY. Based on the proposed improvements, a Road Improvement Fee is not required.

S11.0 TERMINATION OF THE EXISTING SEPTIC

S11.1 The SUBJECT PROPERTY is currently served by a privately owned and operated septic field. Prior to connection of any portion of the SUBJECT PROPERTY to any CITY utility, OWNER AND DEVELOPER shall provide written evidence and documentation to the satisfaction of the City's Director of the City's Department of Utilities-Water/Wastewater demonstrating that the septic field has also been terminated and capped in accordance with DuPage County Health Department regulations then in effect. Failure to comply with these requirements shall entitle the CITY to deny issuance of any building permits and occupancy permits for the SUBJECT PROPERTY. In addition, the CITY may take such other actions as it deems appropriate, including but not limited to filing ordinance violations against the OWNER AND DEVELOPER and their grantees, successors in interest, assignees, heirs, executors, or lessees. Each day such violations continue shall be deemed an ordinance violation and subject to prosecution as such. The provisions of this Section S11.1 shall survive the expiration or termination of this Agreement.

S12.0 OWNER AND DEVELOPER OBLIGATIONS

S12.1 The OWNER AND DEVELOPER of each duplex, [or in conjunction with a homeowners association ("**HOA**") which may be formed by the OWNER AND DEVELOPER, along with covenants, conditions, and restrictions to govern the HOA for the six (6) duplex units], shall be responsible to provide and pay for all exterior maintenance, landscaping, snow removal and the collection and disposal of all refuse, recyclable, and other materials for their duplex (or for all six (6) duplexes in the event an HOA exists). So long as each OWNER AND DEVELOPER or the HOA provides and pays for the collection and disposal of all refuse and recycling, the City shall not charge them for any City managed refuse and recycling services.

Pursuant to the binding effect provisions of Section G19.1 hereof, each owner of any portion of the SUBJECT PROPERTY (and any lessee, or other individual or entity bound to the provisions of this Agreement), and any HOA, shall be obligated to comply with the provisions of this Agreement, including but not limited to those set forth in Section S13 below and each subsection thereof.

S12.1.1 Written notice of the obligations set forth in S12.1 above shall be attached to the purchase and sales agreement of any portion of the SUBJECT PROPERTY.

S13.0 UNIT DESIGNS; COLORS; AND ANTI-MONOTONY.

S13.1 OWNER AND DEVELOPER shall construct three (3) duplexes on the Subject Property using the designs ("**Designs**") and approved colors including color names ("**Approved Colors**") depicted on **Exhibit F** attached hereto and made part hereof. Should OWNER AND DEVELOPER desire to revise the Designs or the Approved Colors, OWNER AND DEVELOPER shall submit their requested revisions to the Zoning Administrator and shall be required to return to the Planning and Zoning Commission for a public hearing thereon. Any costs associated with scheduling a new public hearing for that purpose shall be borne by OWNER AND DEVELOPER. Notwithstanding the foregoing, the City Zoning Administrator shall have the discretion to determine that a color not specified as an Approved Color is acceptably similar to an Approved Color to be used in place of an Approved Color.

S13.2 The provisions herein in this Section S13 and all subsections hereof, shall be binding throughout the term of this Agreement.

S14.0 EFFECTIVE DATE.

S14.1 The effective date ("**EFFECTIVE DATE**") of this Agreement shall be the date it is fully executed by the Parties hereto.

/SIGNATURES ON FOLLOWING PAGES/

IN WITNESS WHEREOF, the parties set their hands and seals as of the EFFECTIVE DATE set forth in S14.1 hereof.

CITY OF NAPERVILLE

By: _____
Scott A. Wehrli
Mayor

Attest
By: _____
Dawn C. Portner
City Clerk

State of Illinois)
)
County of DuPage)

The foregoing instrument was acknowledged before me by Scott A. Wehrli, Mayor, and Dawn C. Portner, City Clerk, this _____ day of _____, 2026.

_____
Notary Public

-seal-

OWNER AND DEVELOPER/HAWKEYE PROPERTY HOLDINGS LLC

By: CLM

[name] CHAD MEASE

[title] PRESIDENT

State of Illinois)
)
County of DuPage)

The foregoing instrument was acknowledged before me by Chad Mease, President, and _____, _____, this 10th day of July, 2026.

OFFICIAL SEAL
JOELLEN M. LEAVY
Notary Public, State of Illinois
Commission No. 909380
My Commission Expires
March 10, 2028

Joellen M. Leavy

Notary Public

-seal-

EXHIBIT C

LEGAL DESCRIPTION

LOTS 10, 11, 12, 13 AND 14 IN BLOCK 17, AND THE SOUTH 10 FEET OF THE VACATED 20 FOOT WIDE PUBLIC ALLEY, VACATED PER DOCUMENT R2004-241006, LYING IMMEDIATELY NORTH OF AND ADJOINING SAID LOT LOTS 10, 11, 12, 13 AND 14, IN NAPER VILLA MANOR, BEING A SUBDIVISION OF THE SOUTH HALF OF SECTION 1, AND IN THE SOUTH HALF OF SECTION 1 AND OF THE NORTH HALF OF SECTION 12, TOWNSHIP 38 NORTH, RANGE 9 EAST OF THE THIRD PRINCIPAL MERIDIAN, ACCORDING TO THE PLAT THEREOF RECORDED MAY 21, 1926 AS DOCUMENT 213969, IN DUPAGE COUNTY, ILLINOIS.

ALSO, LOT 15, IN BLOCK 17, AND THE SOUTH 10 FEET OF THE VACATED 20 FOOT WIDE PUBLIC ALLEY, VACATED PER DOCUMENT R2004-241006, LYING IMMEDIATELY NORTH OF AND ADJOINING SAID LOT 15, IN NAPER VILLA MANOR, BEING A SUBDIVISION IN THE SOUTH HALF OF SECTION 1 AND IN THE NORTH HALF OF SECTION 12, TOWNSHIP 38 NORTH, RANGE 9 EAST OF THE THIRD PRINCIPAL MERIDIAN, ACCORDING TO THE PLAT THEREOF RECORDED MAY 21, 1926 AS DOCUMENT 213969, IN DUPAGE COUNTY, ILLINOIS.

ALSO, THE WEST 16.5 FEET OF VACATED PEARSON STREET (FORMERLY KNOWN AS WEBSTER STREET) VACATED PER DOCUMENT R2010-031981, LYING IMMEDIATELY EAST OF AND ADJOINING LOT 15, IN BLOCK 17, AND THE SOUTH 10 FEET OF THE VACATED 20 FOOT WIDE PUBLIC ALLEY, VACATED PER DOCUMENT R2004-241006, LYING IMMEDIATELY NORTH OF AND ADJOINING SAID LOT 15, IN NAPER VILLA MANOR, BEING A SUBDIVISION IN THE SOUTH HALF OF SECTION 1 AND IN THE NORTH HALF OF SECTION 12, TOWNSHIP 38 NORTH, RANGE 9 EAST OF THE THIRD PRINCIPAL MERIDIAN, ACCORDING TO THE PLAT THEREOF RECORDED MAY 21, 1926 AS DOCUMENT 213969, IN DUPAGE COUNTY, ILLINOIS.

PINs:
07-12-214-013 and
07-12-209-024

Commonly known as:
27w240 Bauer Rd., Naperville, IL 60563 and
27w280 Bauer Rd., Naperville, IL 60563

EXHIBIT A

PLAT OF ANNEXATION FOR
27W240 & 27W280 BAUER ROAD
NAPERVILLE, ILLINOIS

OF PART OF THE NORTH HALF OF SECTION 12, TOWNSHIP 38 NORTH, RANGE 9 EAST OF THE THIRD PRINCIPAL MERIDIAN, DUPAGE COUNTY, ILLINOIS

NORTH

AREA SUMMARY	
GROSS LOT AREA:	20,540 S.F. (0.471 ACRES)
BAUER ROAD R.O.W. AREA:	17,146 S.F. (0.394 ACRES)
TOTAL ANNEXATION AREA:	37,686 S.F. (0.865 ACRES)

PROPERTY INFORMATION

LOTS 10, 11, 12, 13, 14 AND VACATED ALLEY
P.I.N.: 07-12-214-013
ADDRESS: 27W240 BAUER ROAD, NAPERVILLE, IL 60563

LOT 15 AND VACATED ALLEY AND STREET
P.I.N.: 07-12-209-024
ADDRESS: 27W280 BAUER ROAD, NAPERVILLE, IL 60563

THIS PLAT HAS BEEN SUBMITTED FOR RECORDING AND RETURN TO:
NAME: NAPERVILLE CITY CLERK
400 SOUTH EAGLE STREET
NAPERVILLE, IL 60540

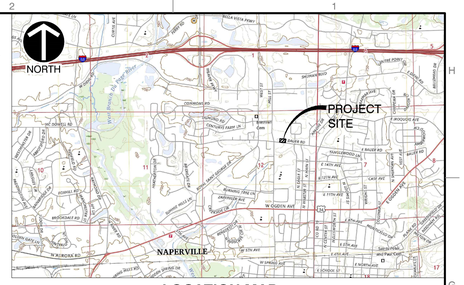

LOCATION MAP
N.T.S.
MAP PROVIDED BY USGS DATED 2024

SURVEYOR'S NOTES:

1. DISTANCES ARE MARKED IN FEET AND DECIMAL PLACES THEREOF. NO DIMENSION SHALL BE ASSUMED BY SCALE MEASUREMENT HEREON. DISTANCES AND/OR BEARINGS SHOWN IN PARENTHESIS (456.67') ARE RECORD OR DEED VALUES, NOT FIELD MEASURED.
2. THE PROPERTY SHOWN HEREON IS SUBJECT TO MATTERS OF TITLE, WHICH MAY BE REVEALED BY A CURRENT TITLE REPORT. THERE MAY ALSO BE ADDITIONAL TERMS, POWERS, PROVISIONS AND LIMITATIONS CONTAINED IN AN ABSTRACT DEED, LOCAL ORDINANCES, DEEDS, TRUSTS, COVENANTS OR OTHER INSTRUMENTS OF RECORD. EXISTING EASEMENTS AND SETBACKS HAVE BEEN SHOWN BASED ON FIDELITY NATIONAL TITLE INSURANCE WITH POLICY NUMBER 27512-235173998 DATED JUNE 9, 2025, AND CHICAGO TITLE INSURANCE COMPANY ORDER NUMBER 25006646NP DATED JULY 8, 2025.
3. BEARINGS SHOWN HEREON ARE REFERENCED TO THE ILLINOIS STATE PLANE COORDINATE SYSTEM, EAST ZONE. THESE BEARINGS HAVE BEEN ESTABLISHED UTILIZING A REAL TIME KINEMATIC (RTK) GLOBAL NAVIGATION SATELLITE SYSTEM (GNSS) AND ARE BASED ON THE NORTH AMERICAN DATUM OF 1983 (2011 ADJUSTMENT).
4. CIVIL & ENVIRONMENTAL CONSULTANTS, INC. IS AN ILLINOIS PROFESSIONAL DESIGN FIRM, LICENSE NUMBER 184.000402, EXPIRES/RENEWS APRIL 30, 2027.
5. THERE ARE NOT ELECTORS THAT RESIDE ON THE PROPERTY HEREBY ANNEXED.

CITY COUNCIL CERTIFICATE

STATE OF ILLINOIS }
COUNTY OF DUPAGE } SS

APPROVED AND ACCEPTED BY THE MAYOR AND CITY COUNCIL OF THE CITY OF NAPERVILLE, ILLINOIS, AT A MEETING HELD

THE _____ DAY OF _____, A.D., 2026.

BY:_____
MAYOR

ATTEST:_____
CITY CLERK

DUPAGE COUNTY RECORDER'S CERTIFICATE

STATE OF ILLINOIS }
COUNTY OF DUPAGE } SS

THIS INSTRUMENT_____, WAS FILED FOR RECORD IN THE RECORDER'S OFFICE OF DUPAGE COUNTY, ILLINOIS,

ON THE _____ DAY OF _____, 2026.

AT_____O'CLOCK_____M.

_____
RECORDER OF DEEDS

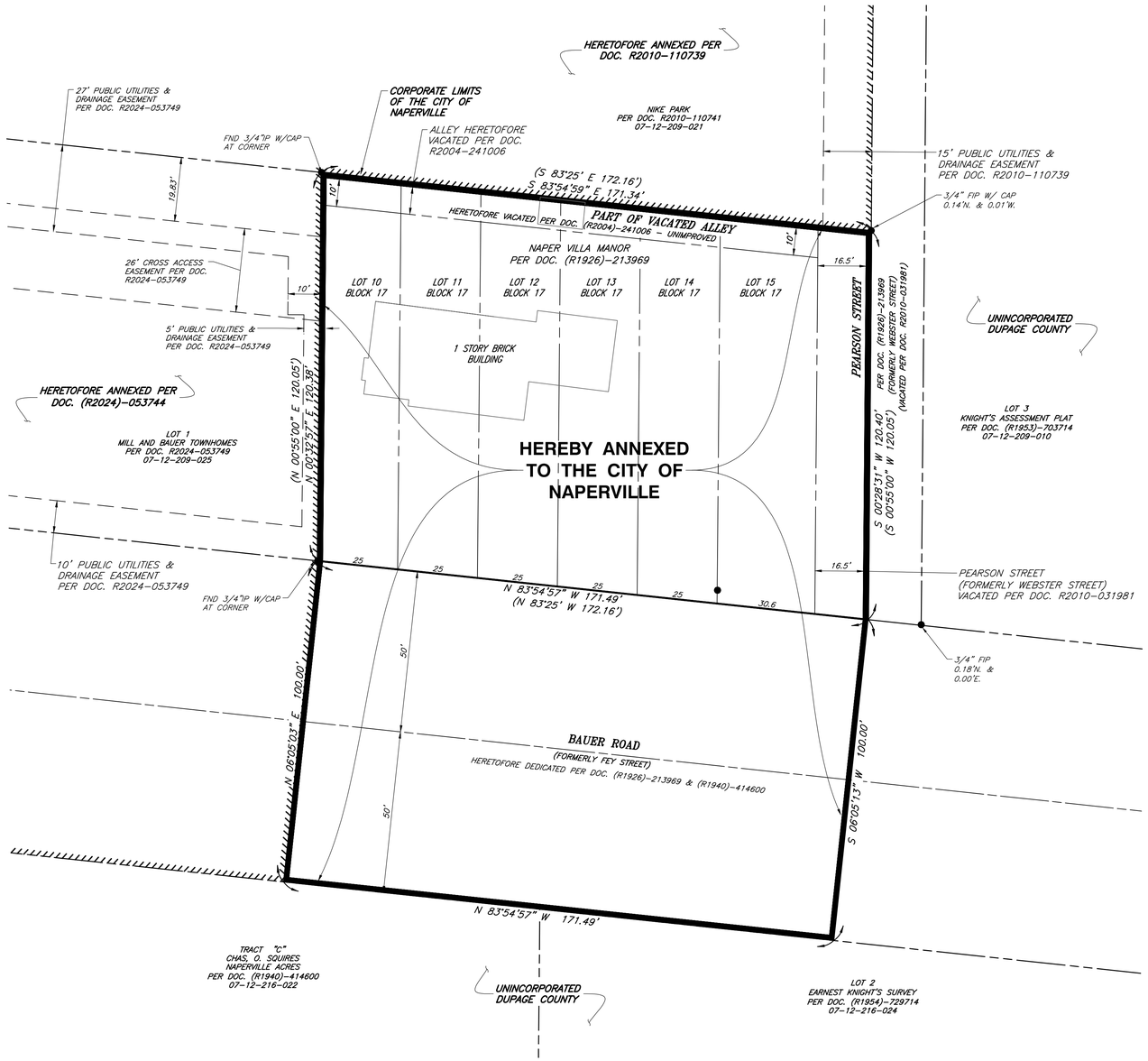

LEGAL DESCRIPTION OF PROPERTY TO BE ANNEXED

LOTS 10, 11, 12, 13 AND 14 IN BLOCK 17, AND THE SOUTH 10 FEET OF THE VACATED 20 FOOT WIDE PUBLIC ALLEY, LYING IMMEDIATELY NORTH OF SAID LOTS 10, 11, 12, 13 AND 14, IN NAPER VILLA MANOR, BEING A SUBDIVISION OF THE SOUTH HALF OF SECTION 1, AND THE NORTH HALF OF SECTION 12, TOWNSHIP 38 NORTH, RANGE 9 EAST OF THE THIRD PRINCIPAL MERIDIAN, ACCORDING TO THE PLAT THEREOF RECORDED MAY 21, 1926 AS DOCUMENT 213969, IN DUPAGE COUNTY, ILLINOIS.

ALSO, LOT 15, IN BLOCK 17, AND THE SOUTH 10 FEET OF THE VACATED 20 FOOT WIDE PUBLIC ALLEY, VACATED PER DOCUMENT R2004-241006, LYING IMMEDIATELY NORTH OF AND ADJOINING SAID LOT 15, IN NAPER VILLA MANOR, BEING A SUBDIVISION IN THE SOUTH HALF OF SECTION 1, AND IN THE NORTH HALF OF SECTION 12, TOWNSHIP 38 NORTH, RANGE 9 EAST OF THE THIRD PRINCIPAL MERIDIAN, ACCORDING TO THE PLAT THEREOF RECORDED MAY 21, 1926 AS DOCUMENT 213969, IN DUPAGE COUNTY, ILLINOIS.

ALSO, THE WEST 16.5 FEET OF VACATED PEARSON STREET (FORMERLY KNOWN AS WEBSTER STREET) VACATED PER DOCUMENT R2010-031981, LYING IMMEDIATELY EAST OF AND ADJOINING LOT 15, IN BLOCK 17, AND THE SOUTH 10 FEET OF THE VACATED 20 FOOT WIDE PUBLIC ALLEY, VACATED PER DOCUMENT R2004-241006, LYING IMMEDIATELY NORTH OF AND ADJOINING SAID LOT 15, IN NAPER VILLA MANOR, BEING A SUBDIVISION IN THE SOUTH HALF OF SECTION 1, AND IN THE NORTH HALF OF SECTION 12, TOWNSHIP 38 NORTH, RANGE 9 EAST OF THE THIRD PRINCIPAL MERIDIAN, ACCORDING TO THE PLAT THEREOF RECORDED MAY 21, 1926 AS DOCUMENT 213969, IN DUPAGE COUNTY, ILLINOIS.

TOGETHER WITH THAT PART OF BAUER ROAD (FORMERLY KNOWN AS FEY STREET) HERETOFORE DEDICATED PER DOCUMENTS 213969 AND 414600 LYING IMMEDIATELY SOUTH OF AND ADJOINING LOTS 10, 11, 12, 13, 14 AND 15 IN BLOCK 17 AND THE WEST 16.5 FEET OF VACATED PEARSON STREET (FORMERLY KNOWN AS WEBSTER STREET) IN NAPER VILLA MANOR SUBDIVISION RECORDED AS DOCUMENT 213969, IN DUPAGE COUNTY, ILLINOIS, EXCEPTING THEREFROM THAT PART, IF ANY, PREVIOUSLY ANNEXED.

SURVEYOR'S CERTIFICATE

STATE OF ILLINOIS }
COUNTY OF DUPAGE } S.S.

I, TIMOTHY J. MURPHY, A PROFESSIONAL LAND SURVEYOR, HEREBY CERTIFY THAT THIS PLAT WAS PREPARED BY CIVIL & ENVIRONMENTAL CONSULTANTS, INC., UNDER MY SUPERVISION FOR THE EXCLUSIVE USE OF THE CLIENT NOTED HEREON FOR ANNEXING THE HEREIN DESCRIBED PROPERTY TO THE CITY OF NAPERVILLE, ILLINOIS.
GIVEN UNDER MY HAND AND SEAL AT NAPERVILLE, ILLINOIS,

THIS ____ DAY OF _____, 2026.

_____
TIMOTHY J. MURPHY
PROFESSIONAL LAND SURVEYOR NUMBER 035-002870.
LICENSE EXPIRES/RENEWS NOVEMBER 30, 2026.
***HAND SIGNATURE ON FILE**

LEGEND:

- PROPERTY LINE
- ADJACENT PROPERTY LINE
- BUILDING SETBACK LINE
- RIGHT-OF-WAY CENTERLINE
- EXISTING EASEMENT
- PROPOSED EASEMENT
- EXISTING CORPORATE LIMITS OF WHEATON
- ANNEXATION BOUNDARY
- MONUMENTATION FOUND

ABBREVIATIONS

P.U. & D.E.	PUBLIC UTILITIES & DRAINAGE EASEMENT
FIP	FOUND IRON PIPE
FIR	FOUND IRON ROD
PIN	PERMANENT INDEX NUMBER

CITY PROJECT NUMBER: DEV-0162-2025

SCALE IN FEET
0 20 40

REVISION RECORD

NO	DATE	DESCRIPTION
1	01/22/2026	REVISED PER CITY OF NAPERVILLE COMMENTS, DATED 12/12/2025

Civil & Environmental Consultants, Inc.
1230 East Diehl Road
Suite 200
Naperville, IL 60563
Ph: 630.963.6026
www.cecinc.com

PREPARED FOR:
REDSTART CONSTRUCTION, INC.
522 NORTH WASHINGTON STREET
NAPERVILLE, ILLINOIS 60563

DRAWN BY:	ET	CHECKED BY:	DRAFT	APPROVED BY:	DRAFT
DATE:	NOVEMBER 10, 2025	DWG SCALE:	1" = 20'	PROJECT NO:	347-703

PLAT OF ANNEXATION
27W240 & 27W280 BAUER ROAD
NAPERVILLE, ILLINOIS 60563

DRAWING NO.: **SV01**
SHEET 1 OF 1

P:\347-2001\347-7031\-Survey\dwg\SV01-PLAT OF ANNEXATION\347703-SV01-PLAT OF ANNEXATION.dwg\SHEET 11 LS(1)\22/2026 - tim.murphy - LP: 1/22/2026 11:11 PM

EXHIBIT B

School Donation Worksheet

Name of Subdivision Bauer Road Duplexes

	Land	Cash	
School Donation =	**0.0901**	**$28,678.83**	= Total Land x $318,300.00

=Round (((Total Elementary Pop. x 0.0231) + (Total Jr. High Pop. x 0.0208) + (Total High School Pop x 0.0267)),4)

	Type of Unit	Pre-School 0 - 4 Yrs		Elementary Grades K-5		Junior High Grades 6-8		High School Grades 9-12		Adults 18-up		Total per Unit	
	Detached Single-family												
	2-bedroom	0.120	0.000	0.411	0.000	0.138	0.000	0.222	0.000	1.856	0.000	2.746	0.000
5	3-bedroom	0.268	1.340	0.486	2.430	0.153	0.765	0.135	0.675	1.913	9.565	2.955	14.775
	4-bedroom	0.371	0.000	0.702	0.000	0.259	0.000	0.242	0.000	1.985	0.000	3.532	0.000
	5-bedroom	0.386	0.000	0.590	0.000	0.236	0.000	0.242	0.000	2.191	0.000	3.645	0.000
	Attached Single-Family												
	1-Bedroom										0.000		0.000
	2-Bedroom	0.206	0.000	0.084	0.000	0.057	0.000	0.030	0.000	1.318	0.000	1.697	0.000
	3-Bedroom	0.214	0.000	0.104	0.000	0.039	0.000	0.050	0.000	1.966	0.000	2.374	0.000
	4-Bedroom	0.183	0.000	0.271	0.000	0.106	0.000	0.105	0.000	2.102	0.000	2.767	0.000
	Apartments												
	Efficiency									1.400	0.000	1.400	0.000
	1-Bedroom	0.058	0.000	0.032	0.000	0.012	0.000	0.013	0.000	1.653	0.000	1.710	0.000
	2-Bedroom	0.129	0.000	0.064	0.000	0.031	0.000	0.038	0.000	1.744	0.000	2.007	0.000
	3-Bedroom	0.199	0.000	0.115	0.000	0.073	0.000	0.083	0.000	2.005	0.000	2.475	0.000
	People Produced		1.340		2.430		0.765		0.675		9.565		14.775

# of Students Generated = 3.870

EXHIBIT C

Date prepared:

Park Donation Work Sheet

Name of Subdivision **Bauer Road Duplexes**

	Land	Cash	
Park Donation =	**0.1260**	**$40,773.60**	= Land Donation x $323,600.00

=Round((Total People Produced x 0.0086),4)

	Type of Unit	Pre-School 0 - 4 Yrs		Elementary Grades K-5		Junior High Grades 6-8		High School Grades 9-12		Adults 18-up		Total per Unit	
	Detached Single-family												
	2-bedroom	0.127	0.000	0.327	0.000	0.102	0.000	0.118	0.000	1.779	0.000	2.453	0.000
5	3-bedroom	0.244	1.220	0.440	2.200	0.179	0.895	0.177	0.885	1.892	9.460	2.930	14.650
	4-bedroom	0.348	0.000	0.522	0.000	0.235	0.000	0.265	0.000	2.116	0.000	3.486	0.000
	5-bedroom	0.333	0.000	0.533	0.000	0.262	0.000	0.279	0.000	2.344	0.000	3.750	0.000
	Attached Single-Family												
	1-Bedroom										0.000		0.000
	2-Bedroom	0.072	0.000	0.091	0.000	0.044	0.000	0.080	0.000	1.610	0.000	1.897	0.000
	3-Bedroom	0.157	0.000	0.178	0.000	0.060	0.000	0.113	0.000	1.746	0.000	2.253	0.000
	4-Bedroom	0.217	0.000	0.358	0.000	0.154	0.000	0.198	0.000	2.127	0.000	3.053	0.000
	Apartments												
	Efficiency									1.210	0.000	1.210	0.000
	1-Bedroom	0.015	0.000	0.033	0.000	0.013	0.000	0.013	0.000	1.691	0.000	1.764	0.000
	2-Bedroom	0.037	0.000	0.063	0.000	0.028	0.000	0.030	0.000	1.748	0.000	1.906	0.000
	3-Bedroom	0.037	0.000	0.152	0.000	0.091	0.000	0.083	0.000	2.330	0.000	2.692	0.000
	People Produced		1.220		2.200		0.895		0.885		9.460		14.650

Date Prepared:

EXHIBIT D

FINAL ENGINEERING PLANS
BAUER ROAD DUPLEXES
NAPERVILLE, ILLINOIS 60563

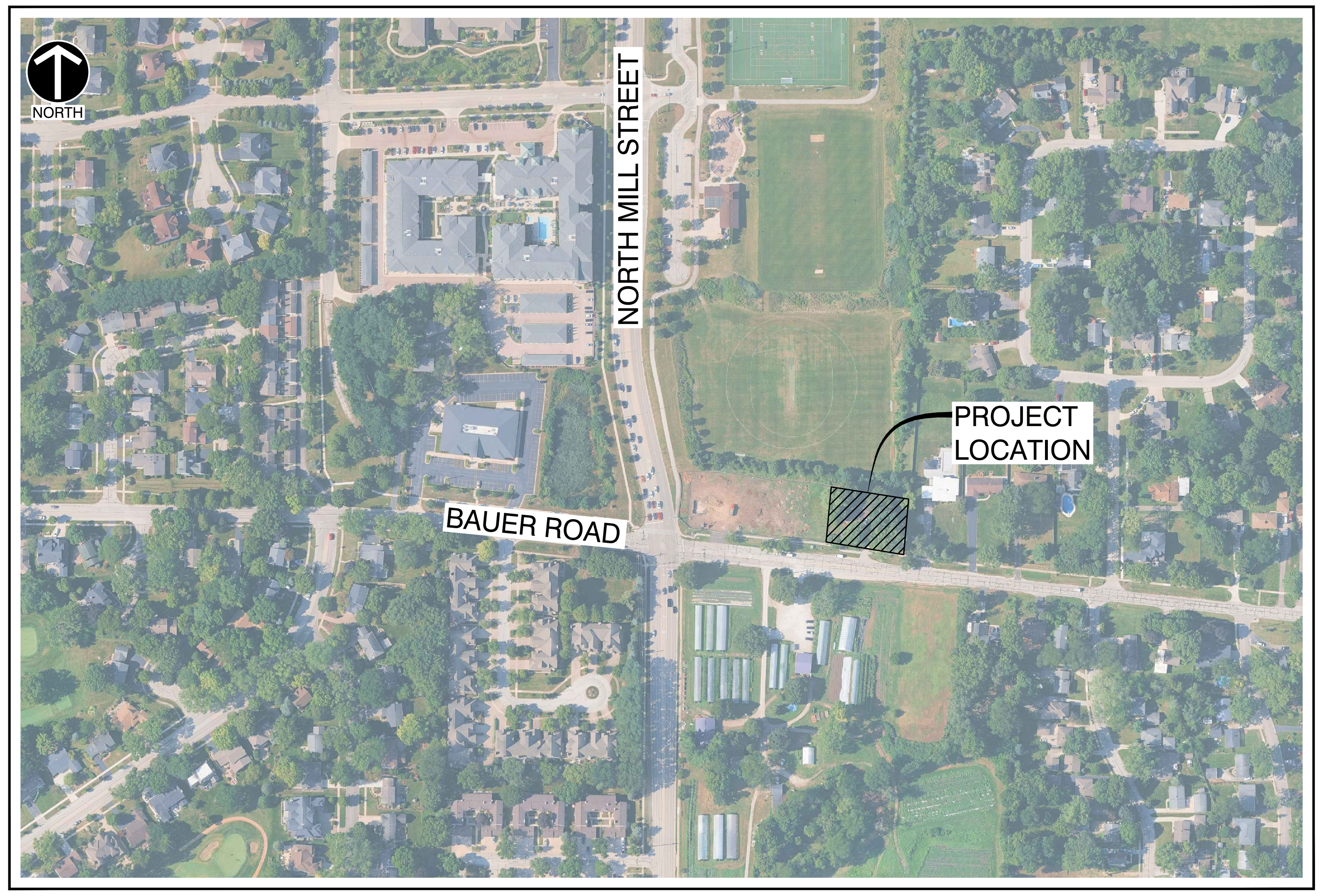

SITE MAP
BASE IMAGE FROM GOOGLE EARTH
DATED JUNE 2024
SCALE 1" = 300'

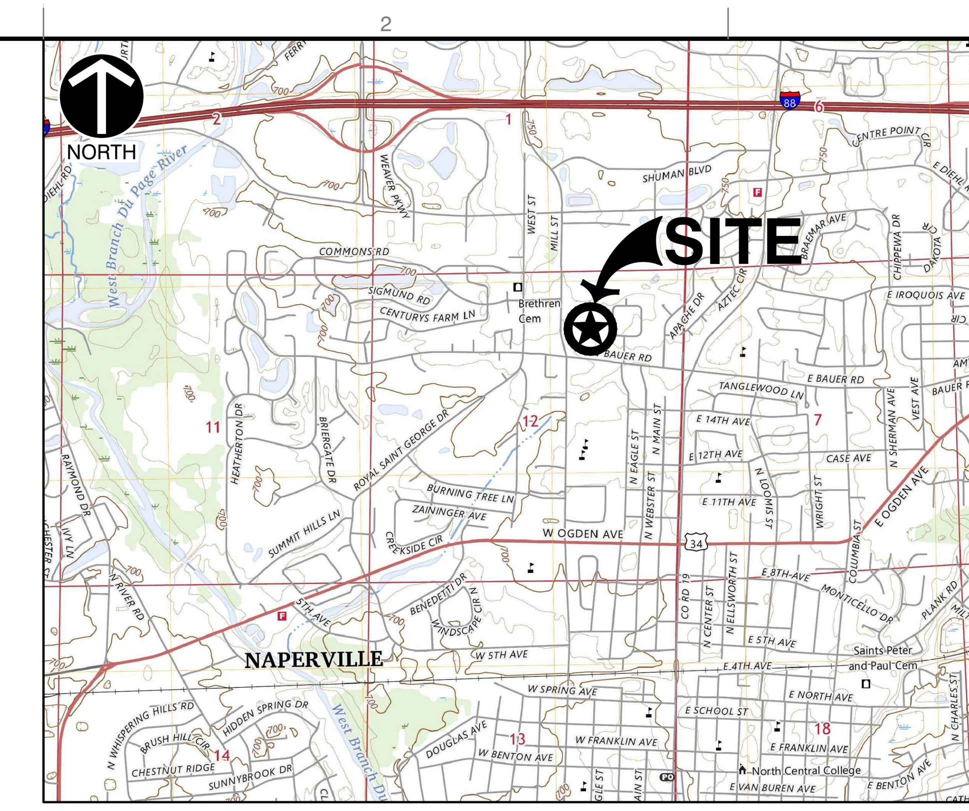

VICINITY MAP
BASE MAP IMAGE PROVIDED BY U.S. GEOLOGICAL SURVEY
ARLINGTON HEIGHTS QUADRANGLE, DATED 2021
NOT TO SCALE

LEGEND

PROPOSED / EXISTING / DESCRIPTIONS

- BOUNDARY PROPERTY LINE
- PROPERTY LINE
- RIGHT-OF-WAY
- UNDERLYING PROPERTY LINE
- CENTER LINE
- EASEMENT LINE
- SETBACK LINE
- SECTION LINE
- INDEX (MAJOR) CONTOUR (715)
- INTERMEDIATE (MINOR) CONTOUR (711)
- FENCE LINE
- WOOD FENCE LINE
- CURB
- EDGE OF PAVEMENT
- EDGE OF GRAVEL
- PAVEMENT SHOULDER
- STORM PIPE (ST)
- DOWNSPOUT SERVICE LINE
- WATER LINE (W)
- SANITARY SEWER LINE (SAN)
- PROPOSED FORCEMAIN (FM)
- GAS LINE (G)
- OVERHEAD WIRE (OH-W / OH-E)
- ELECTRIC LINE (E)
- CABLE LINE (C)
- FIBER OPTIC LINE (FO)
- TELEPHONE LINE (T)
- GUIDE RAIL
- TREELINE
- PROPOSED TRENCH BACKFILL
- PROPOSED CONCRETE
- PROPOSED PAVEMENT
- PROPOSED RIPRAP
- PROPOSED STRIPING
- BUILDING
- PROPOSED SLOPE LABEL (5.00%)
- PROPOSED SPOT ELEVATION (595.68)
- TOP OF WALL ELEVATION (000.00TW)
- BOTTOM OF WALL ELEVATION (000.00BW)
- TOP OF CURB ELEVATION (000.00TC)
- FLOWLINE ELEVATION (000.00FL)
- SANITARY MANHOLE
- CLEANOUT
- FLARED END SECTION
- STORM MANHOLE
- STORM CATCH BASIN (ROUND LID)
- STORM CATCH BASIN (CURB LID)
- STORM CURB INLET
- STORM INLET (CIRCULAR)
- STORM INLET (SQUARE)
- STORM BEEHIVE INLET
- STORM DRAIN OR DOWNSPOUT
- WATER VALVE VAULT
- WATER VALVE BOX
- FIRE HYDRANT
- ELECTRIC CONTROL CABINET (ABOVE GRADE)
- ELECTRIC HANDHOLE
- TRANSFORMER
- ELECTRIC METER
- LIGHT STANDARD
- UTILITY POLE
- TRAFFIC MANHOLE
- TELEPHONE PULL BOX (FLUSH WITH GRADE)
- TELEPHONE BOX/CABINET (ABOVE GRADE)
- CABLE MANHOLE
- FIBER OPTIC BOX/CABINET (ABOVE GRADE)
- FIBER OPTIC MANHOLE
- GAS LINE MARKER
- MANHOLE (UNKNOWN)

BENCHMARKS:

REFERENCE:

1. BERNTSEN MONUMENT IN 6" PVC PIPE WITH BMAC 6 ALUMINUM ACCESS COVER AT THE NORTHWEST CORNER OF 5TH AVENUE AND MILL STREET. (CITY OF NAPERVILLE BENCHMARK #1506)

   ELEVATION=690.61 (NAVD88)

SITE:

2. CUT CROSS AT EAST END OF CURB SOUTH SIDE OF BAUER ROAD, 116'± WEST OF THE EAST PROPERTY LINE OF SUBJECT SITE EXTENDED.

   ELEVATION=719.55

3. MAGNAIL IN WEST EDGE OF ASPHALT PATH EAST SIDE OF MILL ROAD, 29'± NORTH OF THE NORTH PROPERTY LINE OF SUBJECT SITE.

   ELEVATION=717.60

SHEET LIST TABLE

SHEET NUMBER	SHEET TITLE
C000	COVER SHEET
C001	SITE SPECIFICATIONS - 1
C002	SITE SPECIFICATIONS - 2
C003	SITE SPECIFICATIONS - 3
C100	EXISTING CONDITIONS
C101	DEMOLITION AND STORMWATER POLLUTION & PREVENTION PLAN
C200	DIMENSION PLAN
C300	GRADING PLAN
C400	UTILITY PLAN
C800	DETAILS - 1
C801	DETAILS - 2
C802	DETAILS - 3

PROJECT TEAM

OWNER

REDSTART CONSTRUCTION, INC.
522 NORTH WASHINGTON STREET
NAPERVILLE, ILLINOIS 60563
PH: (630) 201-7306
CONTACT: CHAD MEASE - PRESIDENT

ARCHITECT

MEYER DESIGN
2368 CORPORATE LANE
NAPERVILLE, ILLINOIS 60563
PH: (630) 389-0594
CONTACT: STEVE MEYER

CIVIL ENGINEER

CIVIL & ENVIRONMENTAL CONSULTANTS, INC.
1230 EAST DIEHL ROAD, SUITE 200
NAPERVILLE, ILLINOIS 60563
PH: (630) 963-6026
FX: (630) 963-6027
CONTACT: JIM CANEFF, P.E.

LANDSCAPE ARCHITECT

WESTWOOD ENVIRONMENTAL LLC
1N617 ARBOR AVENUE
WEST CHICAGO, ILLINOIS 60185
PH: (630) 774-2561
CONTACT: CRAIG HERNAN, RLA

STATE OF ILLINOIS }SS
COUNTY OF DUPAGE }

I, JAMES G. CANEFF, AN ILLINOIS PROFESSIONAL ENGINEER, HEREBY CERTIFY THAT THESE PLANS HAVE BEEN PREPARED BY CIVIL & ENVIRONMENTAL CONSULTANTS, INC., ILLINOIS LICENSED PROFESSIONAL DESIGN FIRM NO. 184.004002, LICENSE EXPIRES APRIL 30, 2027, UNDER MY PERSONAL DIRECTION FOR THE EXCLUSIVE USE OF THE CLIENT NOTED BELOW. REPRODUCTION OR USE BY THIRD PARTIES IS STRICTLY PROHIBITED WITHOUT THE WRITTEN PERMISSION OF THE UNDERSIGNED.

GIVEN UNDER MY HAND AND SEAL THIS 27TH DAY OF APRIL, 2026.

James G. Caneff

ILLINOIS LICENSED PROFESSIONAL ENGINEER NO. 46225
REGISTRATION VALID THROUGH NOVEMBER 30, 2027
(NOT VALID WITHOUT ORIGINAL SIGNATURE)

©COPYRIGHT 2026 CIVIL & ENVIRONMENTAL CONSULTANTS, INC. ALL RIGHTS RESERVED.

JAMES G. CANEFF
062-046225
REGISTERED PROFESSIONAL ENGINEER
STATE OF ILLINOIS

811 Know what's below. Call before you dig.

ILLINOIS LAW REQUIRES ANYONE DIGGING TO CALL JULIE AT 1-800-892-0123 AT LEAST 48 HOURS/TWO WORKING DAYS PRIOR TO THE START OF EXCAVATION AND THE PROJECT MUST BEGIN WITHIN 14 CALENDAR DAYS FROM THE CALL.

CITY PROJECT NUMBER DEV-0162-2025

REVISION RECORD

NO	DATE	DESCRIPTION
1	01/16/2026	REVISED PER CITY OF NAPERVILLE REVIEW COMMENTS DATED 12/12/2025
2	03/13/2026	REVISED PER CITY OF NAPERVILLE REVIEW COMMENTS DATED 02/26/2026
3	04/27/2026	REVISED PER CITY OF NAPERVILLE REVIEW COMMENTS DATED 04/13/2026

ENGINEERING, SURVEYING AND LANDSCAPE ARCHITECTURE IN THE STATE OF NORTH CAROLINA WILL BE PROVIDED BY CEC ENGINEERING AND LANDSCAPE ARCHITECTS OF NC, PLLC. SERVICES IN PUERTO RICO WILL BE PROVIDED BY CEC ENGINEERS & CONSULTANTS, LLC. LANDSCAPE ARCHITECTURAL SERVICES IN THE STATE OF OHIO WILL BE PROVIDED BY CEC LANDSCAPE ARCHITECTS, LLC.

CEC
Civil & Environmental Consultants, Inc.
1230 East Diehl Road
Suite 200
Naperville, IL 60563
Ph: 630.963.6026
www.cecinc.com

REDSTART CONSTRUCTION, INC.
BAUER ROAD DUPLEXES
27W240 BAUER ROAD
NAPERVILLE, ILLINOIS 60563

COVER SHEET

DATE:	OCTOBER 21, 2025	DRAWN BY:	ET
DWG SCALE:	NOT TO SCALE	CHECKED BY:	MAJ
PROJECT NO:	347-703	APPROVED BY:	*JGC

DRAWING NO.: C000
SHEET 1 OF 12

EXHIBIT E

PROJECT TECHNICAL SPECIFICATIONS

1. GENERAL NOTES

A. DEFINITIONS
(1) Whenever in these Project Technical Specifications the following terms are used, the intent and meaning shall be interpreted as follows:
(a) Governing Agency: Government or regulatory entity with authority to implement and enforce specific laws, permit requirements, or construction requirements. City of Naperville Standard Specifications for Construction and Standard Details are available online at https://www.naperville.il.us/projects-in-naperville/standard-specifications-for construction/.
(b) Owner: Entity or individual for whom the project is being performed.
(c) Contractor: Entity or individual responsible for performing construction activities and furnishing all labor, materials, equipment and other incidental work necessary for the successful completion of the project and for carrying out all duties and obligations imposed by the contract.
(d) Engineer: Licensed professional engineering entity, or licensed professional engineer and/or authorized agent(s), who represents the Owner during the construction phase of the project work.
(e) Geotechnical Engineer: Licensed professional engineering entity, or licensed professional engineer and/or authorized agent(s), who, in representing the Owner, is involved with the principles, properties and behavior of earth materials with regard to the project work.
(f) Project Drawings / Plans: The drawings that define the required site development activities and improvements.
(g) IDOT Standard Specifications: The current edition of the Illinois Department of Transportation's (IDOT) "Standard Specifications For Road & Bridge Construction" including all applicable current supplemental specifications and special provisions.

B. GOVERNING REGULATIONS
(1) All project activities and improvements shall be in accordance with the Governing Agency regulations. In the event of conflict with these Project Technical Specifications, or the indicated Reference Specifications, the Governing Agency regulations shall apply.

C. REFERENCE STANDARDS AND SPECIFICATIONS
(1) Site development activities and improvements, including site preparation and demolition, earthwork, sanitary sewers, storm drainage, water supply, pavement, lighting, landscape improvements, and erosion/sediment control measures shall be in accordance with the Reference Specifications indicated throughout these Project Technical Specifications. All Reference Specifications shall be incorporated into and made a part of the Project Technical Specifications. When the Reference Specifications conflict with Project Technical Specifications, Project Technical Specifications shall govern.

D. CONTRACT GENERAL CONDITIONS
(1) These Project Technical Specifications supplement the engineering plans, the Agreement between Owner and Contractor, and other supplemental documents that comprise the overall project Contract. These Project Technical Specifications address the technical requirements of the project design as indicated on the Project Drawings (Plans). Unless specifically addressed in the Plans or these Project Technical Specifications, general conditions such as bid items, quantities, unit prices, terms of payment, change management, construction schedule, submittals, and other conditions are defined in the Agreement between Owner and Contractor.
(2) The Contractor shall be responsible for complying with applicable Federal, State, and local requirements, together with exercising precaution at all times for the protection of persons (including employees) and property. It is the sole responsibility of the contractor to initiate, maintain, and supervise all safety requirements, precautions, and programs in connection with the work.
(3) The Contractor shall indemnify and hold harmless the Owner and Engineer for any and all injuries and/or damages to personnel, equipment, and/or existing facilities occurring in the course of the site improvement construction work described in the Plans and these Project Technical Specifications.
(4) The Contractor shall obtain all required construction permits in accordance with local, state, and federal regulations.
(5) The Contractor shall guarantee all materials and workmanship for a period of 1 year following final acceptable by the Owner and the Governing Agencies.

E. QUALITY CONTROL OF MATERIALS
(1) Materials shall be inspected, sampled, and tested before, during, and after they are incorporated into the work. The timing of these activities shall be as appropriate for the materials being placed and the properties (composition, gradation, density, strength, compaction, etc.) being examined. The requirements for quality testing are specified within the applicable sections of these Project Technical Specifications.
(2) Materials not conforming to the requirements of the Project Technical Specifications at the time they are used or installed will be considered unacceptable and shall be removed and replaced with acceptable materials properly installed in place at the Contractor's expense.
(3) When material test results are not within specification tolerances, the supplier shall make appropriate adjustments at its source to correct the issue.
(4) Material inspections, sampling, and testing shall be performed by an independent testing agency/laboratory with suitable capabilities and experience. The testing entity shall be retained by Contractor or Owner, as required or as specified in the Contract Documents.

2. EXISTING CONDITIONS & SITE PREPARATION

A. EXISTING CONDITIONS
(1) Existing conditions as depicted on the Plans are general and illustrative in nature. It is the responsibility of the Contractor to examine the site and be familiar with existing conditions prior to initiating construction. If conditions are encountered, before or during construction, that are significantly different than those shown on the Plans, Contractor shall notify the Engineer immediately.
(2) It is not the Engineer's intent that any single plan sheet in the Plans fully depicts all work associated with the project. The Contractor shall be familiar with all sheets in the Plans for construction. Contractor shall similarly be familiar with all structural, architectural, mechanical, electrical, or other plans, as necessary, for the construction of the overall project.
(3) Contractor shall protect all property corner pins, permanent monuments, and permanent benchmarks during construction. If disturbed, Contractor shall have items reset by a licenses surveyor at Contractor expense.
(4) Contractor shall protect all existing utilities, structures, and features to remain. Any items to remain that have been disturbed or damaged as a result of construction shall be repaired or replaced at Contractor expense.

B. EXISTING UTILITIES
(1) Underground utility information shown on the Plans may be based upon a combination of topographic survey data, field observations, historical utility maps, Owner-provided information, or other available data for the Site. The Plans constitute a representation of utility locations from best known information available to the Engineer. There is no guarantee that the utilities shown comprise all such utilities in the area, either in service, or abandoned.
(2) Contractor shall be responsible for contacting all agencies, utility companies, and pipeline companies known or suspected to have buried cable, duct, sewer, pipes, etc., which may conflict with the project improvements to determine the location and depth of the existing utilities.
(3) If conflicts occur after the existing utility conditions have been determined by field investigations, Contractor shall immediately notify Engineer and either:
(a) Adjust the location and depth of the proposed improvements as directed by Engineer in cooperation with the Owner, or
(b) If relocation of proposed improvements is not feasible, Contractor shall work with Owner and Engineer to make arrangements with the affected utility companies to have their utilities protected or relocated.
(4) All utility disconnection, removal, relocation, cutting, capping, and/or abandonment shall be coordinate with the appropriate utility company / agency.

C. EROSION / SEDIMENTATION CONTROL
(1) Erosion/sedimentation control measures, as indicated on the Plans and as required elsewhere in these Project Technical Specifications, shall be employed during the course of construction operations and until suitable ground covers are established on all construction site areas.
(2) Erosion/sedimentation control measures shall be properly installed and functional prior to any earth disturbing activities.

D. CONSTRUCTION ACCESS
(1) Construction ingress-egress shall be limited to defined connections to adjacent driveways and public roadways, and as indicated on the plans and as required elsewhere in these Project Technical Specifications.

E. TRAFFIC CONTROL
(1) The Contractor shall provide necessary traffic control for work performed in active transportation areas, including any specific traffic control requirements as indicated on the Plans.

F. TEMPORARY CONSTRUCTION FENCING
(1) Temporary construction fences shall be installed where indicated on the Plans and where required by the Engineer to restrict access to and from certain areas. Such fences shall be maintained during construction and removed when all work activities are completed.
(2) Temporary construction fences shall consist of 48-inch-high plastic fabric, metal fabric, or wood lathe fence material (approved by the Engineer, prior to placement) attached to suitable metal posts that are set at 6-foot (or less) intervals and anchored at least 18 inches into the ground.
(3) Temporary chain link construction fences shall be provided where indicated on the Plans.

G. TREE AND LANDSCAPE PROTECTION
(1) Highly visible temporary fences shall be placed around trees and landscape areas designated for protection. Vehicles, equipment, and material storage shall not be allowed within the protection zone.
(2) Vehicle and equipment parking and material storage shall not be permitted within the drip line of any tree, even if the tree is not enclosed in a protective barrier. Vehicles and equipment shall avoid travel within the drip line of trees whenever possible.
(3) Overhanging tree branches within the construction zone that are expected to come in contact with construction equipment shall be properly removed (sawcut) prior to construction in the area. Engineer approval is required before a branch is removed.
(4) Roots of trees that are to be preserved shall be pruned (cut) where indicated on the Plans or required by the Engineer. Tree roots shall be cut with appropriate root pruning equipment to a depth of 24 inches (minimum) before construction begins. The cut shall be made approximately 12 inches closer to the tree than the construction limit (edge of excavation).

H. MATERIAL DISPOSAL
(1) All demolition waste and construction debris shall become the property of the Contractor unless otherwise stated in the Agreement between Owner and Contractor.
(2) The following shall be removed from the construction site and properly disposed of in a legal manner. Unless otherwise stated in the Agreement between Owner and Contractor, the cost of removal and disposal shall be included in the fixed or unit prices for the various contract pay items and no additional payment will be allowed therefor.
(a) All surplus excavated materials.
(b) Construction and demolition debris such as building materials, asphalt and concrete pavement materials, culvert and sewer pipe, utility and drainage structures, retaining walls (concrete, stone and timber), trees, shrubs, and miscellaneous landscape features removed during the installation of the project improvements.
(3) If Contractor intends to dispose of generated construction / demolition debris materials or excavated soils at a regulated clean construction / demolition debris (CCDD) or uncontaminated soil fill operation, the contractor shall be responsible for taking all actions and preparing all documents required by 35 Illinois Administrative Code 1100 prior to transport of the materials / soil to the disposal facility. Materials and soils that do not meet CCDD and uncontaminated soil constituent limit requirements shall be disposed of at a permitted landfill facility. The cost of testing and documentation to evaluate the materials / soils and determine proper disposal requirements shall be as defined in the Agreement between Owner and Contractor.
(4) See Earthwork Operations specification section for additional requirements.

3. EARTHWORK OPERATIONS

A. GENERAL
(1) Except where modified by the following Project Technical Specifications, all earthwork operation and compaction requirements shall be in conformance with the material, installation and testing requirements of the IDOT Standard Specifications.
(2) Earthwork shall include site clearing, tree and hedge removal, topsoil and rootmat stripping and stockpiling, earth and fill material excavation, construction of embankments and slopes, placement and compaction of non-structural fill areas, pavement areas, and structural fill areas, removal and disposal of surplus and unsuitable excavated materials, topsoil placement, and final shaping and trimming to the lines and grades indicated on the Plans.
(3) Prior to commencement of earthwork operations, Contractor shall notify any Utility Protection Service or other Governing Agency, as may be required.

B. SITE CLEARING
(1) All construction site features and items such as structures, foundations, fences, pavements, rubbish/debris, trees, shrubs, and surface vegetation shall be removed where necessary and as indicated on the Plans for the construction of the project improvements.
(2) No tree, shrub, or surface vegetation shall be removed unless it is marked for removal or the Engineer specifically authorizes its removal.
(3) When indicated on the Plans, brush, shrubs, branches and small trees shall be shredded or chipped using suitable mechanical equipment. The resulting material shall be stockpiled on-site, as directed by the Engineer, for the Owners' future use. Tree trunks, branches, and removed stumps too large to be chipped shall be removed from the site and disposed of.
(4) Tree stumps shall be removed by excavation or grinding to a depth of not less than 12 inches below ground surface. Material resulting from stump grinding shall be spread on the ground and excavated as part of topsoil or rootmat stripping.
(5) All items and materials not specifically required to remain on-site shall be removed from the site and disposed of in a legal manner.

C. TOPSOIL AND ROOTMAT REMOVAL
(1) Existing topsoil shall be removed from proposed pavement and building areas, non-structural fill areas, and structural fill areas. Sufficient existing topsoil shall be stockpiled for future use as topsoil replacement. When approved by Geotechnical Engineer, stripped topsoil may be used as non-structural fill to design elevations. Topsoil not used for replacement or for non-structural fill shall be removed from the site and legally disposed of, unless directed by Owner to stockpile on-site for future use. Stockpile locations shall be as authorized by Owner.
(2) Topsoil supplied from off-site sources shall be natural, fertile agricultural soil material capable of sustaining vigorous plant growth. It shall contain not less than 4% nor more than 10% organic matter, as determined in accordance with AASHTO T194. It shall contain not less than 12% nor more than 50% clay and the sand content shall not exceed 55%, both as determined in accordance with AASHTO T88. The pH shall be between 5.0 and 8.0. Topsoil material shall be relatively free from large roots, sticks, weeds, brush, stones larger than 1-inch in diameter, or other litter or waste products. It shall be a loamy mixture having at least 90% passing the No. 10 sieve.
(3) Within proposed pavement and building areas where there is no existing topsoil, the surface layer of organic material (friable soil containing roots or other vegetative matter) shall be removed before starting fill and compaction operations. Such removed material may be used as non-structural fill. If this material is not used as non-structural fill, it shall be removed from the site and legally disposed of.

D. EXCAVATION
(1) Existing earth and fill materials within the project construction limits shall be excavated as necessary to establish the elevations, contours, and drainage patterns indicated on the Plans. Excavated materials classified by Geotechnical Engineer as suitable structural fill material shall be used to construct compacted subgrades within the project building and pavement areas. Excess materials not needed for filling or for the construction of berms or embankments shall be removed from the site and legally disposed of, unless directed by the Engineer or Owner to stockpile on-site for future use. Stockpile locations shall be as authorized by the Owner.
(2) Rock materials within the project construction limits shall be excavated to a minimum of 6 inches below subgrade levels of proposed pavements and pipe bedding. Rock materials shall be removed to a minimum of 18 inches below building and structure foundations. Rock materials shall be defined as boulders one cubic yard or greater in volume and all materials in ledges, bedded deposits, and conglomerate deposits that exhibit the physical characteristics of rock, as determined by Geotechnical Engineer. Excavated rock materials not used for filling or for the construction of berms or embankments shall be removed from the site and disposed of, unless directed by the Engineer or Owner to stockpile on-site for future use. Stockpile locations shall be as authorized by the Owner.
(3) Excavated materials classified by the Geotechnical Engineer as unstable or unsuitable for structural fill purposes and not needed for non-structural fill, shall be removed from the site and legally disposed of, unless directed by the Engineer or Owner to stockpile on-site for future use. Stockpile locations shall be as authorized by the Owner.
(4) Excavations shall be maintained in a well-drained condition at all times. Temporary drainage (dewatering) facilities shall be provided where surface runoff is not possible or effective. Such facilities shall be operated during the entire course of earthwork operations. Dewatering facilities shall include appropriate erosion and sediment control measures, as indicated elsewhere in these Project Technical Specifications. Unless otherwise stated in the Agreement between Owner and Contractor, the cost of temporary drainage facilities and dewatering activities shall be considered incidental to the various pay items of the work.

E. FILL PLACEMENT
(1) Before placing any fill within pavement or structural areas, the existing subgrade shall be compacted as indicated in the "Compaction" section of these Project Technical Specifications. Pavement subgrade areas shall be proof-rolled to check for soft, unstable, or otherwise unsuitable materials and approved by a Geotechnical Engineer prior to paving operations. Where possible, proof-rolling shall be accomplished with at least four passes of a fully loaded tandem axle dump truck. Below-grade footing or foundation areas shall be inspected by a Geotechnical Engineer prior to foundation installation. Soft, unstable, or otherwise unsuitable materials shall be removed and replaced as directed by Geotechnical Engineer.
(2) Structural fill materials shall be soil materials that can be compacted to develop a stability satisfactory to the Geotechnical Engineer. Structural fill materials shall not contain frozen material or any material which, by decay or otherwise, might result in site or foundation settlement.
(3) Material Types For Structural Fill Purposes:
(a) Suitable Fine-Grained Soils - Soil materials that comply with ASTM D2487 Soil Classification Group CL and meet the following requirements:
(i.) Laboratory maximum dry density when determined in accordance with ASTM D698.
(ii.) Plasticity Index greater than 12.
(iii.) Liquid Limit less than 45.
(iv.) Particle size distribution with greater than 50% passing the No. 200 sieve.
(b) Suitable Coarse-Grained Soils - Soil materials that comply with ASTM D2487 soil classification groups GW, GP, GM, SW, SP and SC.
(c) Bituminous concrete and granular base materials removed from existing pavement areas may be used as structural fill, subject to gradation, placement, and compaction control by Geotechnical Engineer.
(d) Impervious clay layers (liners) shall be constructed of fine-grained soils within the CL classification that have a Plastic Index greater than 15 and a moisture content greater than optimum and are free of stones bigger than 1 inch average size.
(4) Unsuitable Fill - Soil materials that are not in conformance with the stated criteria for structural fill material shall not be used as structural fill.
(5) Installed fill layers softened or otherwise damaged by rain, ponded water, or construction activities shall be scarified, dried, and recompacted, or removed and replaced. This work, even if performed after lift or fill acceptance, shall be incidental to the various pay items of the work.
(6) Unsuitable Subgrade Conditions:
(a) Within areas of new or reconstructed pavements, specific requirements for removal and remedial procedures shall be as directed by Geotechnical Engineer. Soft or otherwise unacceptable subgrade materials shall typically be removed to a depth where the minimum in situ unconfined compressive strength is 2.0 tsf and the in situ moisture content is no more than 3 percentage points above the optimum moisture content per ASTM D1557. When the depth of unsuitable material is excessive and does not warrant complete removal, remedial procedures will typically require partial removal of unsuitable subgrade material, placement of a geotextile fabric (MIRAFI 600X or approved equal), and sufficient aggregate fill (IDOT CA-1 or alternate acceptable granular material) to the required subgrade level. Depths of unsuitable subgrade removal will be as directed by the Geotechnical Engineer. Alternative procedures may be required depending on the conditions encountered.
(b) Removal of unsuitable materials and installation of replacement fill material under and adjacent to proposed buildings and structures shall be as specified by Geotechnical Engineer.
(c) Payment for removal and replacement of unacceptable materials and the installation of geotextile fabric and aggregate fill shall be as indicated in the agreement between Owner and Contractor. Such payment shall include all work necessary for removal and disposal of unsuitable materials, supply and placement of fabric and aggregate materials, supply, placement and compaction of additional structural fill material, if required, and any dewatering required during these activities.
(7) Where necessary, structural fill materials shall be placed and compacted under proposed pavements, buildings, and structures. Compacted structural fill shall be placed to required subgrade elevations.
(8) Unsuitable materials may be placed within non-structural fill areas only where fill is required to obtain final subgrade levels. If borrow pits are used to obtain structural fill material, unsuitable materials may be used to bring the borrow areas to grade. Placement of such materials shall be limited to areas and depths authorized by the Geotechnical Engineer. If sufficient acceptable placement areas are not available, remaining unstable and unsuitable materials shall be removed from the site and legally disposed of.
(9) If necessary, Contractor shall provide sufficient suitable structural fill material from off-site sources as necessary to complete earthwork operations to the required levels and elevations indicated on the Plans. Structural fill materials shall be in conformance with the stated criteria for structural fill. Contractor shall provide the Geotechnical Engineer access to the proposed off-site sources to take samples and evaluate materials.

F. FILL COMPACTION
(1) Fill materials shall be placed in layers (lifts) and compacted in accordance with the following specified requirements. Lift thickness shall not exceed 8 inches (loose condition) and the fill material (when compacted) shall have a moisture content within the limits of -1 to +3 percentage points of optimum value. Specific lift thickness and moisture content shall be as determined by the Geotechnical Engineer to obtain the required compaction and strength of material in place.
(2) Cohesive soils and well-graded aggregate mixtures shall be sampled and tested to determine the laboratory maximum density and optimum moisture content (control values) of the material. The test method shall be the ASTM Standard as indicated below.
(3) Free-draining cohesionless soils and aggregate mixtures shall be sampled and tested to determine the laboratory relative density (control value) of the material.
(4) Laboratory density and moisture tests shall be performed to determine the control values for each type and source of material to be used. One test of laboratory maximum density and optimum moisture content shall be performed for each 300 cubic yards of fill and backfill material, and when any change in material occurs that may affect the maximum density or optimum moisture content values.
(5) Aggregate supplier shall provide a written certification that the aggregate gradation and quality conforms to the project requirements. If a certification is not provided, gradation and quality tests shall be performed for each 300 cubic yards of stockpiled or in-place source material.
(6) Non-Structural Areas: The top 6 inches of existing subgrade and all layers of cohesive soil and well-graded granular fill materials shall be compacted to at least 90% maximum dry density, as determined by the Standard Proctor Method (ASTM D698). Free-draining aggregate and soil materials (ASTM D4253 & D4254) shall be placed and compacted as specified by the Geotechnical Engineer.
(7) Pavement Areas: The top 6 inches of existing subgrade and all layers of cohesive soil and well-graded granular fill materials shall be compacted to at least 95% maximum dry density, as determined by the Standard Proctor Method (ASTM D698). Free-draining aggregate and soil materials (ASTM D4253 & D4254) shall be placed and compacted as specified by Geotechnical Engineer.
(8) Building Areas: The top 6 inches of existing subgrade and all layers of cohesive soil and well-graded granular fill materials shall be compacted to at least 95% maximum dry density, as determined by the Standard Proctor Method (ASTM D698). Free-draining aggregate and soil materials (ASTM D4253 & D4254) shall be placed and compacted as specified by Geotechnical Engineer.
(9) Impervious Clay Liners: All layers of clay fill material shall be compacted to at least 92% maximum dry density, as determined by the Standard Proctor Method (ASTM D698).
(10) Soil and aggregate fill materials compacted in place shall be field tested to determine in-place density and moisture values. A nuclear density gauge shall be used in accordance with ASTM D6938 to measure in-place density/moisture values of cohesive soils and well-graded aggregate materials, unless Geotechnical Engineer determines other testing equipment is more suitable for the type of material being tested. The dry unit weight of the in-place compacted material shall be compared to its control value to determine the percent compaction achieved.
(11) Frequency of fill material moisture content and compaction tests shall be as follows, unless otherwise adjusted by Geotechnical Engineer.
(a) When using materials from exposed stockpile, excavation, or borrow area sources, a minimum of two moisture content tests per day shall be performed for each type and source of material being placed during stable weather. During unstable weather, moisture content tests shall be performed as determined by Geotechnical Engineer.
(b) Within pavement areas, one in-place density test shall be performed for each 6,000 square feet, or fraction thereof, of each lift of material placed during each day.
(c) Under building/structure ground slabs and mat foundations, one in-place density test shall be performed for each 3,000 square feet, or fraction thereof, of each lift of material placed during each day.
(d) Under building/structure wall footings, one in-place density test shall be performed for each 100 lineal feet, or fraction thereof, of each lift of material placed during each day.
(e) Under building/structure column footings, one in-place density test shall be performed for each footing, of each lift of material placed during each day.

G. MOISTURE CONTROL
(1) Where the subgrade, or other layer of soil, must be moisture-conditioned before compaction, the top 12 inches of the material shall be scarified or disked and then dried or moistened as required to achieve compaction. Water shall be applied uniformly in a manner that prevents free water from appearing on the surface during, or subsequent to, compaction operations. Material that is too wet to air dry and compact to the specified density shall be removed and replaced.

H. GRADING TOLERANCES
(1) Surface elevations shall be within the following indicated tolerances.
(a) Under vehicle, pedestrian, and drainage control pavements, and building floor slabs: -0.08 to +0.04
(b) Drainage swales and stormwater basins: -0.10 to +0.10
(c) Embankments and slopes other than (b) above: -0.15 to +0.15
(2) Unless otherwise noted, grades and contours shown on the Plans are final topsoil and pavement surface elevations. All excavated and filled areas not within the limits of buildings, structures, or pavements shall be graded to 6 inches below the indicated elevations to allow for topsoil placement, unless otherwise indicated on the Plans.

I. RESTORATION
(1) Previously prepared earth subgrade areas that are damaged by soil erosion or construction activities shall be repaired and graded to design contours and elevations before placement of pavement materials or topsoil.
(2) Areas not otherwise subject to disturbance that are damaged by movement or storage of construction vehicles, equipment, or materials, or other construction activities such as the discharge of water from the construction site, shall be restored to original conditions.

J. TOPSOIL PLACEMENT
(1) Topsoil shall be placed on all of the following areas. Minimum topsoil depth shall be 6 inches unless otherwise indicated on the Plans. Topsoil placement shall include grading and shaping to required final contours and elevations.
(a) All project grass, landscape, or other vegetated areas indicated on the Plans.
(b) All unpaved offsite areas damaged by installation of project associated utilities or pavements.
(c) All unpaved offsite areas disturbed by project associated activities.
(2) Within new wetland areas, topsoil shall be placed in a manner to minimize compaction of the material. Minimum lift thickness shall be 12 inches unless otherwise indicated on the Plans. The placed material shall be disked or tilled to a depth of at least 8 inches. Once the topsoil is placed, no vehicles except the disking/tilling equipment shall be allowed on the material.
(3) If required or as indicated on the Plans, Contractor shall obtain and provide necessary topsoil material from off-site sources (any stockpiled topsoil on the site shall also be used). The suitability of material supplied by Contractor shall be as defined elsewhere in these Earthwork Specifications. Contractor shall provide the Geotechnical Engineer access to proposed off-site sources to take samples and evaluate the materials.

K. DISPOSAL OF MATERIALS
(1) Surplus soil materials remaining after completion of fill placement and construction of berms shall be removed from the site and disposed of in legal manner, unless directed by the Owner to stockpile on-site for future use. Stockpile locations shall be as authorized by the Owner.
(2) Removal and disposal of existing utility pipes and structures, construction debris, or other obstructions which interfere with proposed construction and which are not indicated in the Agreement between Owner and Contractor as a separate pay item shall be considered incidental to the earthwork operations.
(3) Contractor shall be responsible for finding locations and obtaining approvals for the off-site disposal of demolition and construction debris, rubbish, pavement materials, shrubs, trees, and surplus, unsuitable excavated soil materials. Owner shall be advised, in writing, of the specific locations of all off-site disposal sites.

4. SANITARY SEWERS, STORM DRAINAGE AND WATER SUPPLY SYSTEMS

A. GENERAL
(1) REFERENCE SPECIFICATIONS
(a) Sanitary sewers, storm drainage, and water supply improvements shall be constructed in accordance with the material, installation and testing requirements of the "Standard Specifications for Water and Sewer Main Construction in Illinois," current edition; except where said requirements are modified by these Project Technical Specifications.
(b) References to "IDOT" requirements or standards shall mean in conformance to the material, installation, and testing requirements of the current edition of the IDOT Standard Specifications.
(2) UNSUITABLE SOIL CONDITIONS
(a) When unsuitable soil conditions are encountered under pipes or structures that require the removal of unsuitable materials below the depth of the standard bedding, the Contractor shall replace the material removed with granular material approved by the Geotechnical Engineer. Depth and extent of removal shall be as determined by the Geotechnical Engineer.
(b) Unless defined otherwise in the Agreement between Owner and Contractor, payment for unsuitable soil removal shall be made at the contract unit price per cubic yard of soil removed and replaced with granular material. Unless defined otherwise in the Agreement between Owner and Contractor, the cost of removing and disposing of the unsuitable material and supplying and placing the granular fill and any dewatering required during these activities shall be considered incidental to the various pay items of the work.
(3) PIPE BEDDING, HAUNCH SUPPORT & INITIAL BACKFILL
(a) Concrete pipe, clay pipe, ductile iron pipe, cast iron pipe, and other types of pipe classified as rigid shall be placed on a 4-inch layer of compacted granular bedding material. This granular material shall also be placed on each side of the pipe (haunch support) from the top of bedding up to the horizontal midpoint of the pipe. Granular bedding and haunch material shall consist of graded crushed stone 1/4 inch to 3/4 inch in size (IDOT equivalent CA-11), unless otherwise specified on the Plans.
(b) Thermoplastic pipe (e.g., PVC and HDPE), corrugated metal pipe, and other types of pipe classified as flexible shall be supported with granular bedding, haunching, and initial backfill in accordance with ASTM D2321, except as hereby modified. Class I embedment material (angular graded stone) 1/4 inch to 3/4 inch in size (IDOT equivalent CA-11) shall be used as bedding, haunching, and initial backfill material and initial backfill material shall be installed to 12 inches above the top of the pipe.
(c) Where a pipe projects from an embankment or natural ground, the last 3 feet of bedding and backfill at the pipe end shall be impervious material compacted in place.
(d) Unless otherwise stated in the Agreement between Owner and Contractor, the cost of providing and placing granular bedding, haunch support, and initial backfill material shall be included as part of the fixed price or unit prices for sewer / culvert or main construction of the sizes and types specified.
(4) GRANULAR BACKFILL
(a) Selected granular material shall be used to backfill excavated trenches under all existing and proposed vehicle pavements and sidewalks, trenches with edges closer than 2 feet from edges of existing and proposed vehicle pavements and sidewalks, and where specifically indicated on the Plans. Selected granular material for backfilling trenches shall be IDOT Gradation CA-6, unless otherwise indicated.
(b) Selected granular backfill material placed in trenches under existing and proposed pavements shall be placed in uniform layers not exceeding 6 inches (loose measured) and compacted with mechanical equipment to 95% of the standard proctor density in accordance with the applicable AASHTO or ASTM requirements.
(5) STRUCTURE ADJUSTMENT
(a) Adjustments may be necessary to ensure that frames and grates match the elevation of the surrounding pavement or ground surface. Preformed adjusting rings of the proper dimensions needed to mate the frame to the precast structure shall be used. No more than 12 inches of vertical adjustment may be made using the minimum practical number of individual rings.
(b) All rings shall be High Density Polyethylene Plastic (HDPE), Recycled Rubber, High Density Expanding Polystyrene, Expanded Polypropylene (EPP), or other material as approved by the City Engineer. Precast concrete rings, bricks, rocks, shims, or concrete blocks will not be allowed. Tapered adjusting rings shall be required when the frame will need to match the slope of the roadway.
(c) A resilient, flexible, non-hardening, preformed bituminous mastic material, Conseal 102B or approved equal, shall be used between the cone or top barrel section of the structure and the adjusting rings. A thick bead of non-hardening elastomeric joint sealant conforming to ASTM C-920, Type S, Grade NS, shall be applied between all individual rings, and between the adjusting rings and the frame. The sealant or mastic material shall be applied in such a manner that no surface water or ground water inflow can enter the structure.
(d) All storm sewer structure frames without inside flanges shall be shaped with hydraulic cement or elastomeric joint sealant to form a fillet to the structure or adjusting rings and to maintain water-tightness.
(e) Frame adjustments shall be completed in accordance with Sections 602 and 603 of Standard Specifications for Road and Bridge Construction, prepared by the Illinois Department of Transportation, latest edition, except as noted herein.
(f) Structure adjustments shall be included in the prices of the utility structures being installed or modified and will not be paid for separately.
(6) MARKER POSTS
(a) Sewer and water main structures, valve boxes, and the end location of sewer stubs and building services shall be marked with a 4 x 4 x 8′ wood post. Four feet of the post shall stand aboveground. The top 6 inches of the post shall be painted to identify the type of utility (sanitary - orange; storm - yellow; water - blue).
(b) Providing and installing marker posts shall be incidental to the cost of sewer and water main construction.

B. SEPARATION OF WATER MAINS AND SEWERS
(1) HORIZONTAL SEPARATION
(a) Water mains shall be located at least 10 feet horizontally (edge to edge) from existing or proposed sanitary sewers and storm sewers.
(b) Water mains may be located closer than 10 feet to a sewer when:
(i.) Local conditions prevent a lateral separation of 10 feet and
(ii.) The bottom of the water main is at least 18 inches above the top of the sewer and
(iii.) The water main is either in a separate trench or in the same trench on an earth shelf located to one side of the sewer.
(c) When it is impossible to meet (i) or (ii) above, the sewer shall be encased in a water-tight pipe or constructed of pressure pipe meeting water main standards. The sewer shall also be pressure tested to maximum expected surcharge head before backfilling.
(d) These requirements shall also apply to water service lines.
(2) VERTICAL SEPARATION
(a) Whenever a water main crosses a sanitary sewer or a storm sewer, the water main shall be separated from the sewer so that the bottom of the water main is at least 18 inches above the top of the sewer. This vertical separation shall be maintained for that portion of the water main located within 10 feet horizontally (measured perpendicular, either direction) of the O.D. of the sewer crossed.
(b) Whenever the required 18-inch vertical separation cannot be maintained between a sewer and a water main, the water main shall be protected by means of one of the following methods:
(i.) Construct the sewer of pressure pipe meeting water main standards for a distance of 10 feet each side (measured perpendicular) of the O.D. of the water main.
(ii.) Install either the sewer or water main within a watertight casing pipe for a distance of 10 feet each side of the crossing (measured perpendicular to the line not provided with the casing pipe). Seal both ends of the casing with hydraulic grout.
(iii.) The method to be used at each specific location shall be as indicated on the Plans. In the event that a clearance problem is not discovered until after construction is underway, Engineer shall determine which method to use.
(c) A vertical separation of 18 inches between the bottom of the sewer and the top of the water main shall be maintained wherever a water main crosses under a sewer.
(d) Construction requirements (regarding vertical separation, materials and structural support) at sewer-water main crossings shall be in conformance with the Standard Specifications for Water and Sewer Main Construction in Illinois.
(e) These requirements shall also apply for water service lines.

C. SANITARY SEWERS SYSTEMS
(1) See City of Naperville Department of Public Utilities (DPU) Water/Wastewater General Notes.

D. STORM DRAINAGE SYSTEMS
(1) See City of Naperville - Transportation, Engineering, and Development (TED) Business Group Plan Notes for Development Projects.

E. WATER SUPPLY SYSTEMS
(1) See City of Naperville - Department of Public Utilities (DPU) Water/Wastewater General Notes.

5. PAVEMENT CONSTRUCTION

A. GENERAL
(1) All roadway, driveway, parking area, storage area, and sidewalk pavements (including curbs and shoulders) shall be constructed in accordance with the material and installation requirements of the current edition of the IDOT Standard Specifications, except where said requirements are modified by the following Project Technical Specifications.
(2) Pavement markings and markers, and traffic control signs and devices, shall be provided, installed, and removed in accordance with the requirements of the IDOT Standard Specifications, except where said requirements are modified by the following Project Technical Specifications.

B. PAVEMENT REPLACEMENT/REPAIR
(1) Existing pavements removed for excavation purposes or damaged by construction operations shall be removed and replaced in conformance to the material and construction requirements of the IDOT Standard Specifications and the requirements of the subsequent portions of this specification section.

REVISION RECORD

NO	DATE	DESCRIPTION
1	01/19/2026	NO REVISIONS THIS SHEET
2	03/17/2026	NO REVISIONS THIS SHEET
3	04/27/2026	NO REVISIONS THIS SHEET

ENGINEERING, SURVEYING AND LANDSCAPE ARCHITECTURE IN THE STATE OF NORTH CAROLINA WILL BE PROVIDED BY CEC SURVEYING AND LANDSCAPE ARCHITECTS OF NC, PLLC. SERVICES IN PUERTO RICO WILL BE PROVIDED BY CEC ENGINEERS & CONSULTANTS, LLC. LANDSCAPE ARCHITECTURE SERVICES IN THE STATE OF OHIO WILL BE PROVIDED BY CEC LANDSCAPE ARCHITECTS, LLC.

Civil & Environmental Consultants, Inc.
1230 East Diehl Road
Suite 200
Naperville, IL 60563
Ph: 630.963.6026
www.cecinc.com

REDSTART CONSTRUCTION, INC.
BAUER ROAD DUPLEXES
27W240 BAUER ROAD
NAPERVILLE, ILLINOIS 60563

SITE SPECIFICATIONS - 1

DATE:	OCTOBER 21, 2025	DRAWN BY:	ET
DWG SCALE:	NOT TO SCALE	CHECKED BY:	MAJ
PROJECT NO:	347-703		
APPROVED BY:	*JGC		

DRAWING NO.: **C001**
SHEET 2 OF 12

EXHIBIT E

P:\340-000\347-703\-CADD\Dwg\CV01-FINAL ENGINEERING\347703-CV01-C001-C003.dwg{C001} LS:(4/27/2026 - etrebicko) - LP: 4/27/2026 12:32 PM

(2) Asphalt and concrete pavements shall be sawcut prior to excavation. Damaged or jagged pavement edges shall be neatly sawcut and removed prior to installing new pavement.
(3) Replacement material types and thickness shall be as indicated on the Plans.
(4) Pavement repair limits shall be as indicated on the Plans. Pavement repairs outside of these limits shall be at the Contractor's expense.

C. SUBGRADE PREPARATION
(1) Prior to placement of pavement material, all subgrade areas shall be proof-rolled to check for possible unsuitable or unstable soil conditions. Proof-rolling shall be witnessed by the Geotechnical Engineer. Should unsuitable or unstable material be encountered within pavement areas, unsuitable/unstable material shall be removed to a depth as described in the Earthwork Section of these Project Technical Specifications. Such materials shall be replaced with suitable structural fill material and compacted in place as specified by Geotechnical Engineer. When complete removal of the unsuitable material is not warranted or feasible, remedial procedures (as required by Geotechnical Engineer) shall be used.
(2) Installed structural fill and excavated subgrade damaged by construction traffic, ponded water, or other causes within Contractor's control shall be replaced or repaired at Contractor's sole expense.

D. PAVEMENT MATERIALS
(1) Various pavement types, materials, and thicknesses shall be as indicated on the Plans.
(2) Aggregate base courses shall be Aggregate, Type B (100% crushed). Aggregate gradation shall be CA-6, except where permeable base course material gradation is specified on the Plans. Aggregate materials shall conform to IDOT Specifications Article 1004.04, except that the use of crushed concrete shall not be allowed.
(3) Permeable base course material shall be Aggregate, Type C (100% crushed). Aggregate gradation shall be CA-7, except where alternate material gradation is specified on the Plans. Aggregate materials shall conform to IDOT Specifications Article 1004.04, except that the use of crushed concrete shall not be allowed.
(4) Hot-mix asphalt (HMA) pavement materials and mixtures shall be in accordance with Sections 406, 407, 1030 and 1031 of the IDOT Standard Specifications.
(5) HMA Mixture Requirements

Item	Mixture	AC Type	Voids
Surface Course	HMA, Mix D, N50	PG 64-22	4%
Binder Course	HMA, IL-19, N50	PG 64-22	4%

(6) Aggregate materials shall meet or exceed the following strength requirements:
Aggregate, Type B (100% crushed) 80 IBR
Granular Material, Type B 30 IBR
(7) Binder and surface course mixtures may contain reclaimed asphalt pavement (RAP) material resulting from the cold milling or crushing of existing hot-mix asphalt (HMA) pavements. Use of RAP material in new pavement courses shall be in conformance with applicable IDOT requirements.
(8) Bituminous prime coats shall be in accordance with IDOT Specifications Article 406.05. Application rates shall be as follows with the required rate to be as specified by Engineer:
HMA binder or base - 0.05 to 0.10 gallons/S.Y.
Aggregate base - 0.25 to 0.50 gallons/S.Y.
(9) Portland cement concrete (PCC) for curbing, vehicle pavements, sidewalks and support slabs on-grade shall conform to IDOT requirements (3500 psi at 14 days, 5% to 8% air-entrainment) and shall be properly cured in-place. Vehicle pavements shall be Class PV. Curbing, sidewalks and support slabs shall be Class SI.
(10) PCC curbing shall have expansion joints complete with dowel bars (AASHTO M227), dowel bar assemblies and preformed joint filler (AASHTO M213). PCC curbing shall contain continuous reinforcing bars (AASHTO M31).
(11) Sub-base material under PCC pavements and curbing shall be Subgrade Granular Material, Type B (100% crushed).
(12) PCC pavements other than sidewalks shall be provided with contraction, construction, and isolation joints complete with load transfer dowel assemblies, tie bars, and joint material (poured sealer, preformed filler, or elastomeric compression seal) as indicated on the Plans. Joint components, materials, and construction shall be in conformance to applicable IDOT Standard Specifications and IDOT Standard 420001.
(13) Welded wire fabric shall be placed in PCC pavements where indicated on the Plans. Welded wire fabric shall conform to the requirements of AASHTO M55.
(14) Where indicated on the Plans, PCC pavement shall be reinforced with polypropylene fibrillated fibers (ASTM C1116 Type 111, 4.1.3) specifically manufactured to an optimum gradation for use as concrete secondary reinforcement. Fibers shall be added to the concrete mix at the rate of 1.5 pounds per cubic yard. Mixing times and speeds shall be as specified in ASTM C94.

E. PAVEMENT MATERIAL QUALITY CONTROL
(1) Hot Mix Asphalt Pavement
(a) The HMA supplier shall provide a written certification that the HMA material conforms to the Project Technical Specifications.
(b) Specified in-place percent compaction values shall be based on the representative laboratory densities provided by the HMA supplier for the various HMA design mixes to be installed.
(c) The installation of all HMA pavement components (base, binder, and surface courses) and placement lifts shall be inspected and tested to verify compliance with the specified material compaction, temperature, and lift thickness requirements.
(d) One in-place density test, to determine in-place percent compaction, shall be performed for each 2,000 square feet, or fraction thereof, of each lift of material placed during each day.
(e) Measurements to determine HMA temperatures at time of compaction and lift thicknesses shall be performed on a periodic basis during the HMA installation operations. The number of temperature and lift measurements shall be not less than the number of density tests performed during the operations.
(f) If the Project Technical Specifications require pavement cores of the completed work, one core shall be taken for each 4,000 square feet of the installed pavement area.
(2) Portland Cement Concrete Pavement
(a) The concrete supplier shall provide a written certification that the concrete mix is in accordance with the Project Technical Specifications.
(b) Concrete delivered to the work site shall be field-tested before placement to verify that the slump, temperature, and air content values of the material complies with the Project Technical Specifications. Air content, slump, and temperature shall be performed each time a set of test cylinders is prepared. If the air content does not conform to the Project Technical Specifications, additional tests shall be performed on each truckload of concrete until the air content is determined to be within the specified tolerance range. If slump values exceed the maximum specified amount, when excessive variation in the workability of the concrete is observed, or when excessive crumbling or clumping is observed along the edges of slip-formed concrete, additional slump tests shall be performed on the same, or subsequent, truckloads until slump is determined to be within the specified tolerance range.
(c) Representative samples of the concrete mix shall be placed in a set of five standard cylinders for compressive strength testing. The cylinder sets shall be delivered to the material testing laboratory within 32 hours of taking the samples. Two cylinders shall be tested for compressive strength 7 days after the samples were taken. Two cylinders shall be tested 14 days after the samples were taken. One cylinder shall be held in reserve. A sample set (five cylinders) for strength testing shall be taken for each class of concrete not less than once a day, nor less than once for each 100 cubic yards of each class of concrete poured in place.
(d) Concrete delivered to the work site shall be subject to Governing Agency limitations for haul time and material temperature.

F. COMPACTION
(1) Aggregate base course and HMA material shall be placed in layers and compacted. Layer thicknesses shall be as indicated in the applicable IDOT Standard Specifications for the various pavement components and materials. Where layer thickness variation is permitted, thicknesses installed shall be as determined by the Geotechnical Engineer to obtain required compaction and strength of material in place.
(2) Aggregate base course and granular sub-base materials shall be compacted to not less than 95% maximum dry density determined in accordance with the Standard Proctor Method (ASTM D698).
(3) Free-draining granular materials (porous granular embankment and permeable base course material) shall be placed and compacted as specified by the Geotechnical Engineer.
(4) HMA binder and surface course mixtures, HMA base course, and HMA shoulder mixtures shall be placed and compacted in accordance with the requirements of the applicable IDOT Standard Specifications.
(5) Aggregate base course material shall be graded and compacted the same day it is placed on the subgrade.

G. GRADING AND SURFACE TOLERANCES
(1) Surface elevations of completed aggregate bases and sub-bases shall not exceed design surface elevations by more than 1/4 inch. Surface elevations less than design value shall be corrected by adding aggregate or by installing additional thickness of required HMA or PCC pavement material. Such additional HMA or PCC pavement shall be provided at Contractor's expense.
(2) Allowable final surface variations of HMA and PCC pavements (tested with a 10-foot straightedge) shall not exceed 1/4 inch, but Engineer has the right to require corrective measures when variations less than the specified tolerance cause obvious drainage problems. Corrective measures required when the allowable variation is exceeded shall be as indicated in IDOT Specifications Articles 407.09 and 420.10.

H. PAVEMENT THICKNESS TOLERANCE
(1) HMA pavements that have a thickness deficiency of more than 10% shall be removed and replaced if required by Engineer.
(2) PCC pavements (including sidewalks and slabs on-grade) that have a thickness deficiency of more than ½ inch or 10% (whichever is less) shall be removed and replaced if required by Engineer.
(3) Determination of pavement thickness shall be as indicated in IDOT Specifications Articles 407.10 (HMA) and 420.15 (PCC).
(4) Thin pavement removal and replacement shall be at Contractor's expense.

I. PC CONCRETE PROTECTIVE COAT
(1) PCC vehicle pavements and PCC sidewalks immediately adjacent to vehicle pavements shall be given a linseed oil mixture protective coat treatment (two coats, each at an application rate of not more than 50 S.Y. per gallon of mixture) in accordance with IDOT Specifications Article 420.18 and Section 1023.

J. PC CONCRETE CURING
(1) PCC pavement and sidewalks to receive a protective coat treatment shall be cured by means of Methods (1), (2), or (3) of IDOT Specifications Article 1020.13 (waterproof paper, polyethylene sheeting, or wetted burlap).
(2) Concrete surfaces not to receive such treatment can be sealed with membrane curing compound - Method (4).
(3) The curing period in all cases shall be at least 72 hours.
(4) Hot or cold weather concrete curing methods and time periods shall be in accordance with ACI 305 and ACI 306 for hot and cold weather respectively.

K. PAVEMENT MARKINGS AND MARKERS
(1) Pavement markings and markers shall be as indicated on the Plans. Parking spaces shall be defined with 4-inch-wide lines. Stop lines on private drives shall be 24 inches wide.
(2) Pavement markings on driveways and parking areas shall be of a paint suitable for such use according to IDOT Standard Specifications. Materials, installation, and equipment shall meet the requirements of IDOT Standard Specifications Section 780. Required markings shall be as indicated on the Plans.
(3) Pavement lane and auxiliary markings on public roadways shall be reflectorized thermoplastic material conforming to IDOT Standard Specifications. Materials, installation, and equipment shall meet the requirements of IDOT Standard Specifications Section 780.
(4) Pavement marking words and symbols shall conform to the dimensions and spacing specified in the Illinois Manual on Uniform Traffic Control Devices and on IDOT Standard 780001.
(5) Raised reflective pavement markers shall be provided where shown on the Plans. Marker materials and installation shall meet the requirements of IDOT Specifications Section 781.
(6) Existing markings and markers shall be removed as necessary to delineate realigned traffic lanes. Removal shall be in accordance with IDOT Specifications Section 783.

L. ACCESSIBLE PARKING SPACES
(1) Accessible parking spaces shall be in accordance with Illinois Accessibility Code requirements. Each space shall be 16 feet wide and be provided complete with a painted striped aisle (8 feet wide with diagonal 4-inch lines), a standard accessible symbol painted on the pavement, and standard post- or wall-mounted signs (R7-8 "reserved parking" with accessible symbol, R7-8a "van accessible" and R7-I101 "$250 fine").
(2) Required signs (R7-8, R7-8a and R7-I101) shall be mounted on a post or wall located at the front center of the parking space, and no more than 5 feet horizontally from the front of the space. The bottom of the lowest sign shall be a minimum of 4 feet above finished grade.
(3) Signposts shall conform to AASHTO and IDOT standards for "break-away" design.
(4) The pavement area behind the white accessible symbol shall be painted blue. The markings outlining the space and the diagonals within the access aisle of the space shall be of yellow paint.
(5) Pavement slopes across accessible parking stalls and adjoining access aisles shall be maximum 2%.

M. TRAFFIC CONTROL SIGNS
(1) Traffic control signs shall be provided as indicated on the Plans. All signs shall conform to applicable size, material, and installation requirements of the Illinois Manual of Uniform Traffic Control Devices and IDOT Specifications Section 720. Signposts shall be in accordance to IDOT Standards 720011 and 729001 and IDOT Specifications Section 729.

6. SOIL EROSION / SEDIMENT CONTROL AND SITE RESTORATION MEASURES

A. GENERAL
(1) Contractor shall take suitable and sufficient measures to control soil erosion and sedimentation due to construction and site development activities. These measures shall be in substantial conformance with the principles, practices, and standards described in the Illinois Environmental Protection Agency (IEPA) publication "Illinois Urban Manual."
(2) Specific erosion/sediment control and restoration measures shall be as indicated on the Plans, as stated in these Project Technical Specifications, and as described in the "Storm Water Pollution Prevention Plan" (SWPPP, if required) prepared for the Project.
(3) If disturbance exceeds 1 acre and a SWPPP has been prepared for the site, construction and site development work shall comply with the requirements and procedures of the NPDES (National Pollution Discharge Elimination System) Permit No. ILR10, issued by the IEPA for storm water discharge from construction site activities.
(4) Site clearing and excavation shall not proceed until a phased program for performing all required construction and restoration activities is prepared by Contractor and approved by Engineer. The purpose of this program is to control erosion and sediment problems by minimizing the extent of areas subject to erosion during construction and establishing permanent ground covers as soon as possible. The program shall include preparation of site plans indicating planned sequence and extent of specific construction and restoration areas.
(5) Contractor responsibilities shall include the maintenance and repair of all seeded, sodded, and planted surfaces until all specified vegetative covers within the project area are suitably established and erosion potential has ceased.
(6) Construction dewatering operations shall be designed and operated so that water discharged from the project site will meet State of Illinois water quality standards, as set forth in Title 35, Subtitle C, Chapter I, Part 302, Subpart B, Illinois Administrative Code.
(7) Installation and maintenance of all required erosion/sediment control and restoration measures shall be subject to inspection by the Governing Agency. Deficient conditions shall be corrected when required by the Governing Agency.

B. STABILIZATION PRACTICES
(1) Contractor shall limit removal of existing vegetated ground covers only to areas absolutely required to perform the project work. Structural sediment barriers shall be installed at the construction limits of the site as indicated on the Plans. Vegetation within areas that are protected by barrier fencing on the Plans shall not be disturbed during construction.
(2) Exposed soil surfaces shall be stabilized with vegetation and/or protective mulches or blankets. If conditions prevent effective use or placement of such measures, then the installation of structural controls such as sediment barrier fencing and sediment traps will be required.
(3) Surface stabilization measures shall be initiated immediately after earthwork operations have permanently ceased or have temporarily ceased on any portion of the site and will not resume for a period exceeding 14 calendar days. Stabilization of disturbed areas must be initiated within 1 working day of permanent or temporary cessation of earth disturbing activities and shall be completed as soon as possible but not later than 14 days from the initiation of stabilization work in an area.
(4) If construction activity is anticipated to temporarily halt for a period of less than 14 calendar days, then surface stabilization measures do not have to be initiated on that portion of the site as long as the site conforms to the erosion and sediment control requirements of the Plans, SWPPP, and ILR10 permit. Where the initiation of surface stabilization measures by the specified time after construction activity temporarily or permanently ceases is precluded by weather conditions, stabilization measures shall be initiated as soon as practicable.
(5) Temporary seeding shall be employed when necessary due to seasonal limitations or temporary work stoppages. When seasonal weather conditions prevent seeding, sodding, or planting operations, sloped surfaces shall be blanketed or mulched with suitable material as a means of temporary erosion protection.
(6) Areas with permanent vegetative cover seeding shall be protected by applied mulch or erosion control blankets.

C. SEDIMENT BARRIERS
(1) Temporary sediment barriers shall be installed where indicated on the Plans and maintained until soil surfaces have been stabilized with grass or other types of permanent cover. Such barriers shall be silt fences, compost filter socks, coir fiber logs, or other devices as indicated on the Plans.
(2) Work area perimeter temporary sediment barriers shall be installed prior to the start of site disturbance and earthwork operations.
(3) Storm sewer systems shall be installed as soon as earthwork operations permit. Drainage structures shall be graded to a subgrade level 12 inches below the structure rim to create temporary sediment traps unless otherwise indicated on the Plans.
(4) Geotextile filter fabric sediment barriers shall be installed over casting grates of drainage structures that receive surface runoff. Silt fence or compost filter sock barriers shall be placed around drainage structures where the use of filter fabric barriers over the grate is ineffective or not feasible and where silt fences or filter socks are indicated on the Plans. Structures requiring sediment barriers, and the types of barriers to be provided, shall be as indicated on the Plans.
(5) All sediment barriers shall be replaced or cleaned as necessary during construction when they become clogged or ineffective. All sediment traps shall be cleaned periodically during construction to allow them to operate effectively.

D. CONSTRUCTION INGRESS-EGRESS
(1) Construction ingress-egress shall be limited to defined paved driveway connections to adjacent public roadways or where indicated on the Plans. Construction exits shall be cleaned daily, as needed to prevent the spread of mud or debris on the public road pavement. Mud and debris shall be cleared from public roads whenever it occurs and as required by the Public Roadway Authority.
(2) Private roadways, driveways, parking lots, etc., used by construction vehicles and equipment shall be cleaned of mud and debris daily as needed to keep the pavements clean of such materials.
(3) Temporary aggregate pavements for ingress-egress of construction vehicles shall be installed where indicated on the Plans. These pavements shall be maintained and repaired by Contractor as necessary to enable use by vehicles during the entire construction project.
(4) Temporary pavement thickness, aggregate gradation, and geotextile fabric underlayment to be provided shall be as indicated on the Plans.
(5) The upper 6 inches of temporary aggregate access pavements shall be removed upon completion of construction activities and replaced with 6 inches of topsoil, graded to match the adjacent topography, and restored in accordance with the Plans.

E. WATER DIVERSION AND DEWATERING
(1) Methods for diverting water flow, controlling groundwater, and removing stormwater from work sites shall include erosion and sediment control measures as necessary to prevent erosion at pump discharge locations and to minimize the discharge of settleable solids.
(2) Stone or concrete block riprap protection, or other filtering measures, shall be provided at discharge locations when deemed necessary by Engineer.
(3) Sediment traps or water removal sump pits shall be provided when required by Engineer.

F. DUST CONTROL
(1) When dust blowing from construction sites may become a traffic hazard or a danger to the health or comfort to persons downwind, it shall be controlled either permanently or temporarily depending upon the state of development of the site. Dust control measures shall be taken when required by Governing Agency or directed by Engineer.
(2) Dust problems from active construction areas shall be kept under control by means of watering dry surfaces and/or the application of calcium chloride. Application and repetition rates shall be as necessary for effective control.
(3) When dust problems occur from disturbed areas, watering and/or calcium chloride are not effective, and weather conditions prevent effective erosion control seeding, such areas shall be stabilized by the application of chemical tackifiers such as "MARLOC" (Reclamore Co.) or "Soil Seal" (Soil Seal Corp.). Application rates and procedures shall be in accordance with manufacturer's recommendations.
(4) In the event of severe dust problems, the Governing Agency may stop such dust-producing activities until the problem is resolved.

G. SOIL STOCKPILES
(1) Soil stockpiles shall be located to prevent sediment runoff into watercourses and drainage systems, or onto adjacent roadways and properties, and, if shown, shall be placed where indicated on the Plans. Stormwater runoff from soil stockpiles shall include erosion control devices as necessary to prevent erosion or sedimentation.
(2) Soil stockpiles to remain in place more than 15 days shall be surrounded with a sediment barrier fence unless runoff from the stockpile area drains directly to a constructed sediment trap.
(3) Soil stockpiles that will remain in place longer than 60 days shall be stabilized with temporary erosion control seeding (seed and mulch) within 15 days after construction of the stockpile.

H. UNVEGETATED AREAS
(1) Unvegetated areas expected to remain unpaved or unrestored for longer than 60 days shall be stabilized with temporary erosion control seeding and mulching within 15 days after earthwork operations have ceased.
(2) If unvegetated areas are to remain unpaved or unrestored for less than 60 days, sediment barrier fences or excavated sediment traps shall be installed if Engineer determines that sediment runoff will affect adjacent areas.
(3) Unvegetated steep slopes shall be protected by hydromulching the exposed ground with a Bonded Fiber Matrix, Stabilized Fiber Matrix, or Flexible Growth Medium product (applied at rates recommended by the product manufacturer for the site conditions) when such protection is indicated on the Plans or required by Engineer. Other unvegetated steep slope protection, if required, shall be as indicated on the Plans.

I. TOPSOIL PLACEMENT AND VEGETATIVE COVER
(1) Weather conditions permitting, topsoil shall be placed and graded within each defined construction area as soon as practical upon completion of cut and fill operations within that area.
(2) Seeding, planting and erosion protection operations to establish permanent vegetative ground cover shall be performed within 1 day after topsoil placement, whenever weather conditions are adequate for such work.
(3) Temporary erosion control measures shall remain in place until upland areas are permanently vegetated whereby a minimum of 70% of every square yard seeded is covered with a uniform stand of vegetation in a live, healthy condition and erosion potential no longer exists.

J. DRAINAGE OUTLETS AND OVERFLOWS
(1) Erosion protection (stone riprap, concrete block mats, or other specified method) shall be provided at drainage pipe outlets and stormwater basin overflows immediately following installation of the outlet/overflow structures.

K. DRAINAGE CHANNELS AND SWALES
(1) Drainage channel and swales shall be stabilized and protected with the installation of aggregate trench checks, a cellular confinement system, seeding, and/or turf reinforcement mat where and as indicated on the Plans.

L. EROSION CONTROL SEEDING AND MULCHING
(1) Areas which may not be at final grade but will remain undisturbed for longer than 60 days (including soil stockpile areas) shall be seeded and/or mulched, as required by Engineer, within 15 days of stoppage of construction activities within the area.
(2) Seed mixture to be used for temporary erosion control seeding of excavated, filled, graded, or otherwise disturbed areas shall be IDOT Class 7 - 114 lbs. / acre.
(3) Seed mixtures should be applied mechanically so that the seeds are planted at a depth of 1/4 to 1/2 inch. If the seed is broadcast or hydroseeded, secondary raking or harrowing is required.
(4) Seeded areas shall be protected with a wood / cellulose fiber mulch containing a pre-blended chemical tackifier. Mulch application rate shall be 2,000 lbs. per acre (minimum). Tackifier rate shall be as recommended by the product manufacturer.
(5) When indicated on the Plans or required by Engineer, seeded slopes shall be protected by hydromulching the areas with a Bonded Fiber Matrix, Stabilized Fiber Matrix or Flexible Growth Medium product applied at a rate recommended by the product manufacturer for the site conditions. The type of product to be used shall be as indicated on the Plans or determined by Engineer. Other slope protection, if required, shall be as indicated on the Plans.
(6) When seasonal weather conditions or construction operations prevent seeding, sodding, or planting operations for a prolonged period (as determined by Engineer), exposed soil slopes shall be protected by hydromulching the areas with a Bonded Fiber Matrix, Stabilized Fiber Matrix or Flexible Growth Medium product applied at a rate recommended by the product manufacturer for the site conditions. The type of product to be used shall be as determined by Engineer.

M. PERMANENT VEGETATIVE COVERS
(1) Vegetative ground covers shall be provided, installed, and protected in accordance with the Plans.
(2) Vegetative areas (other than lawns) damaged by construction activities, but not within the Project disturbed limits, shall be seeded with IDOT Class 1B Seed Mixture (200 lbs. / acre); unless a different type of seed mixture is indicated on the Plans to match the original conditions. These seeded areas shall be protected with a wood / cellulose fiber mulch (2,000 lbs. / acre) containing a preblended chemical tackifier.
(3) Lawn areas damaged by construction activities shall be restored with turf grass sod to match original conditions.

N. EROSION CONTROL BLANKETS
(1) Seeded areas shall be covered with erosion control blankets where indicated on the Plans and where specifically required by Engineer. These blankets shall be placed within 24 hours of seeding.
(2) Erosion control blankets shall be of one or more of the following types and shall be as specified on the Plans or in these Project Technical Specifications. Installation shall be in accordance with manufacturer recommendations and requirements.

Type 1: Knitted straw fiber blanket with attached photodegradable plastic top and bottom nets: North American Green S150 or equivalent.

Type 2: Mat of wood fiber material with attached photodegradable plastic top and bottom nets: American Excelsior Company Curlex II or equivalent.

Type 3: Knitted straw and coconut fiber blanket with a UV stabilized polypropylene top net and a photodegradable bottom net: North American Green SC150 or equivalent.

Type 4: Knitted coconut fiber blanket with a turf reinforcement mat of UV stabilized polypropylene material and top and bottom UV stabilized polypropylene nets: North American Green C350 or equivalent.

(3) Contractor shall be responsible for maintaining the blankets in place until a satisfactory stand of vegetation is established.

O. PERMANENT TURF REINFORCEMENT MATS
(1) As a means of permanent erosion protection, specific seeded areas shall be covered with turf reinforcement mats (polypropylene fiber matrix product) where indicated on the Plans and where required by Engineer. These mats shall be placed within 24 hours of seeding.
(2) Turf reinforcement mats shall be of one or more types (with or without netting and straw / coconut fiber blanket layers) as specified on the Plans. Installation shall be in accordance with manufacturer recommendations and requirements.
(3) Contractor shall be responsible for maintaining the mats in place until a satisfactory stand of vegetation is established

P. SODDING
(1) Grass areas removed or damaged by construction activities shall be restored with sod and maintained until the sod is knitted to the soil. Disturbed grass areas shall be sodded except where other measures are indicated on the Plans or required by Engineer.
(2) Sodding (including fertilizing) shall be in accordance with Section 252 of the IDOT Standard Specifications, as applicable to this project and as specified herein. Sod material shall be in accordance with Article 1081.03. It is specifically noted that sod grown on soil high in organic material such as peat will not be acceptable.
(3) After required topsoil has been placed and graded, the areas to be sodded shall be thoroughly tilled to a depth of at least 3 inches by disking, harrowing, or other approved methods until the condition of the soil is acceptable to Engineer. If as a result of a rain, a crust is formed over the prepared surface, the surface shall again be placed in a suitable condition for placing sod.
(4) All soil surfaces shall be moist when the sod is placed. When directed by Engineer, Contractor shall be required to apply water to dry soil surfaces at a minimum rate of one gallon per square yard immediately prior to placing the sod.
(5) Fertilizer shall be applied uniformly at a rate of 90 pounds of Nitrogen (N), 54 pounds of available Phosphoric (P_2O_5), and 36 pounds of Soluble Potash (K_2O) per acre; and shall be incorporated into the soil to a depth of at least 3 inches by disking, harrowing or other approved methods acceptable to Engineer. The incorporation of fertilizer may be a part of the tillage operation specified above.
(6) Contractor shall have complete responsibility for watering sodded areas (number, schedule, and rates of applications) as necessary to prevent death or damage of sod material due to lack of water during the time period between sod placement and when the sod becomes knitted to the soil and is growing in place.
(7) If Contractor does not water the sod within 24 hours after notification that the sod is showing damage due to lack of water, Owner reserves the right to engage another contractor to do the work and the cost thereof will be deducted from the monies payable to Contractor for the cost of sodding. Contractor will not be relieved of the responsibility for defective sod or unsatisfactory growing of sod due to the hiring of another contractor by Owner for watering the sod.
(8) If Contractor desires to use water from hydrants, it shall make application to the proper authority, and shall conform to the municipal ordinances, rules, or regulations concerning their use. Water obtained from hydrants shall be at Contractor's expense.
(9) Contractor shall be responsible for the maintenance of all areas sodded under the contract, including necessary watering and resodding, and for the satisfactory establishment of knitted sod grass on all sodded areas until final acceptance of the work. In the event that the length of time between sodding and final acceptance is insufficient for Engineer to determine that acceptable growth is established, final acceptance of the work will not be made until the following growing season or until such time that the grass cover can be appraised as satisfactory.
(10) Approval and acceptance of sodded areas will require that a minimum of 95% of the material within every square yard of sod installed be in a live, healthy condition and be firmly knitted to the soil. Defective or unacceptable sod shall be removed, replaced and watered at Contractor's expense.
(11) Only areas within the defined construction limits that are authorized for topsoil replacement will be considered for payment for sodding. All other grass areas that are damaged by construction operations shall be sodded and restored at Contractor's expense and will not be paid for separately.
(12) Unless defined otherwise in the Agreement between Owner and Contractor, this work will be paid for at the contract unit price per square yard for sodding, which price shall be payment in full for all fertilizer and sod materials and all labor and equipment necessary to perform and complete sodding operations, including watering and other maintenance activities necessary to establish a satisfactory grass cover. Fertilizer nutrients will not be paid for separately and shall be included in the contract unit price for this work.

Q. PERMANENT SEEDING
(1) Where indicated on the Plans, vegetative areas disturbed by construction activities shall be restored by the proper application of fertilizer nutrients, seed mixture, and protective mulch or blanket, and maintenance of said areas until a satisfactory stand of vegetation is established.
(2) Seeding including fertilizing and mulching shall be in accordance with Sections 250 and 251 of the IDOT Standard Specifications, as applicable to this project and as specified herein.
(3) Seed mixtures and application rates shall be as indicated on the Plans. Application rates for dormant seeding shall be at least 150% of specified rates.
(4) Contractor shall submit lists of all materials (seeds, fertilizer, mulches and blankets) and proposed application rates to Engineer for approval prior to starting any seeding work. Contractor shall also submit (to Engineer) a list of equipment to be used in performing this work, prior to starting any such work.
(5) After required topsoil has been placed and graded, the areas to be seeded shall be thoroughly tilled to a depth of at least 3 inches by disking, harrowing, or other approved methods until the condition of the soil is acceptable to Engineer. If as a result of a rain, a crust is formed over the prepared surface, the surface shall again be placed in a suitable condition for seed planting.
(6) Fertilizer shall be applied uniformly at a rate of 90 pounds each of Nitrogen (N), available Phosphoric (P_2O_5), and Soluble Potash (K_2O) per acre; and shall be incorporated into the soil to a depth of at least 3 inches by disking, harrowing or other approved methods acceptable to Engineer. The incorporation of fertilizer may be a part of the tillage operation specified above. Fertilizer nutrients and seed shall be applied in two separate operations.
(7) Seed mixture shall be applied so that the seeds are planted at a depth of ¼ to ½ inch. If the seed is placed by broadcasting or hydro-seeding rather than planted to proper depth by mechanical means, raking, harrowing or rolling with a corrugated roller shall be required.
(8) Seeded areas shall be covered with mulch products, erosion control blankets, or turf reinforcement mats within 24 hours of seeding. The methods of protection to be used shall be as indicated on the Plans.
(9) Mulching shall be by machine application of wood / cellulose fiber mulch (containing a preblended chemical tackifier) applied as a slurry of 2,000 pounds of mulch and not less than 2,000 gallons of water per acre. Mulching shall not be applied concurrently with seeding. Other mulching products and methods (such as Bonded Fiber Matrix, Stabilized Fiber Matrix and Flexible Growth Medium) shall be used where specifically indicated on the Plans.
(10) Seasonal seeding operations shall take place between March 15 and September 30 and only after specific authorization by the Engineer. Dormant seeding, if authorized, shall take place between November 1 and March 1. Seeding outside of these two time frames may be performed provided the Contractor guarantees a minimum of 75 percent growth over the entire seeded area after a period of establishment.
(11) Contractor shall have complete responsibility for watering seeded areas (number, schedule, and rates of applications) as necessary to prevent death or damage of seeds and new vegetation due to lack of water, during the time period between seeding and when the vegetation becomes rooted in the soil and is growing in place.
(12) If Contractor does not water the seed and vegetation within 24 hours after notification that the seed and vegetation are showing damage due to lack of water, Owner reserves the right to engage another contractor to do the work and the cost thereof will be deducted from the monies payable to Contractor for the cost of seeding. Contractor will not be relieved of the responsibility for defective seed or unsatisfactory growing of seed due to the hiring of another contractor by Owner for watering the seed.
(13) If Contractor desires to use water from hydrants, it shall make application to the proper authority, and shall conform to the municipal ordinances, rules, or regulations concerning their use. Water obtained from hydrants shall be at Contractor's expense.
(14) Contractor shall be responsible for the maintenance of all areas seeded under the contract, including all necessary watering, reseeding, and remulching and for the satisfactory growth of vegetation on all seeded areas until final acceptance of the work. In the event that the length of time between seeding and final acceptance is insufficient for Engineer to determine that acceptable growth is established, final acceptance of the work will not be made until the following growing season or until such time that the vegetation cover can be appraised as satisfactory.
(15) Approval and acceptance of seeded areas will require that a minimum of 80% of every square yard seeded be covered with a uniform stand of vegetation in a live, healthy condition. Reseeding, remulching, and watering of unacceptable areas shall be at Contractor's expense.
(16) Only areas within the defined construction limits that are authorized for topsoil replacement will be considered for payment for seeding. All other vegetation areas that are damaged by construction operations shall be seeded and restored at Contractor's expense.
(17) Unless defined otherwise in the Agreement between Owner and Contractor, this work will be paid for at the contract unit prices per square yard for seeding and for mulching, which prices shall be payment in full for all seed, fertilizer, and mulch materials and all labor and equipment necessary to perform and complete grass seeding and mulching operations, including watering and other maintenance activities necessary to establish a satisfactory grass cover. Fertilizer nutrients will not be paid for separately and shall be included in the contract unit price for seeding.

REVISION RECORD

NO	DATE	DESCRIPTION
1	01/19/2026	NO REVISIONS THIS SHEET
2	03/17/2026	NO REVISIONS THIS SHEET
3	04/27/2026	NO REVISIONS THIS SHEET

ENGINEERING, SURVEYING AND LANDSCAPE ARCHITECTURE IN THE STATE OF NORTH CAROLINA WILL BE PROVIDED BY CEC SURVEYING AND LANDSCAPE ARCHITECTS OF NC, PLLC. SERVICES IN PUERTO RICO WILL BE PROVIDED BY CEC ENGINEERS & CONSULTANTS, LLC. LANDSCAPE ARCHITECTURE SERVICES IN THE STATE OF OHIO WILL BE PROVIDED BY CEC LANDSCAPE ARCHITECTS, LLC.

Civil & Environmental Consultants, Inc.
1230 East Diehl Road
Suite 200
Naperville, IL 60563
Ph: 630.963.6026
www.cecinc.com

REDSTART CONSTRUCTION, INC.
BAUER ROAD DUPLEXES
27W240 BAUER ROAD
NAPERVILLE, ILLINOIS 60563

SITE SPECIFICATIONS - 2

DATE: OCTOBER 21, 2025 DRAWN BY: ET
DWG SCALE: NOT TO SCALE CHECKED BY: MAJ
PROJECT NO: 347-703
APPROVED BY: *JGC

DRAWING NO.: C002
SHEET 3 OF 12

P:\340-000\347-703\-CADD\Dwg\CV01-FINAL ENGINEERING\347703-CV01-C001-C003.dwg{C002} LS:(4/27/2026 - etrebicko) - LP: 4/27/2026 12:32 PM

EXHIBIT E

CITY OF NAPERVILLE - DEPARTMENT OF PUBLIC UTILITIES
WATER/WASTEWATER GENERAL NOTES

a. New water main valves, including pressure tap valves, adjacent to an existing water main, and existing water main valves shall only be operated by the City of Naperville, Department of Public Utilities CEE/CM Division personnel with 48-hour notice (Monday-Friday). Contact Naperville DPU-W/WW (630) 420-4122 for scheduling.

b. Any existing utility structures requiring adjustment or reconstruction shall be completed by the contractor to the satisfaction of the utility owner. Adjustments and/or reconstructions not called for on the plans shall be considered incidental to the contract. No more than a total of 12 inches of adjusting rings and/or 2 adjusting rings shall be allowed. All structure frames shall be flush with final grade.

c. Trees shall be installed a minimum of five (5) feet horizontally from underground electrical feeders, sanitary sewers, sanitary services, water mains, and water services. Trees shall be installed a minimum of ten (10) feet horizontally from utility structures and appurtenances, including, but not limited to, manholes, valve vaults, valve boxes and fire hydrants. No trees, shrubs or obstacles will be allowed 10' in front of, 5' on the sides, and 7' to the rear of the electrical transformer.

d. All retainer glands when required to restrain valves, fittings, hydrants, and pipe joints shall be mechanical joint wedge action type MEGALUG 1100 Series as manufactured by EBBA Iron, Inc. or UNI-FLANGE BLOCKBUSTER 1400 SERIES as manufactured by Ford Meter Box Co. and shall be for use on ductile iron pipe conforming to ANSI/AWWA C151/A21.51, for nominal pipe sizes 3" through 48".

e. Existing ductile iron systems for restraining push-on pipe bells shall be MEGALUG SERIES 1100HD or FORD SERIES 1390.

f. Existing ductile iron systems requiring restraint shall be MEGALUG SERIES 1100SD (split MEGALUG) for mechanical joints.

g. Ductile iron water main to be Class 52. All ductile iron pipe is to be encased in polyethylene film Polyethylene encasement to be installed in accordance with ANSI/AWWA C105/A21.5-05.

h. A set of as-built record drawing shall be given to the City of Naperville upon completion of improvements showing the elevation and location (tied to two points) of all new and existing structures including fire hydrants, valve boxes and vaults, linestop sleeves, water service corporation stops, water main fittings/bends, manholes, sanitary service wyes (measured from downstream manhole), and abandoned water or sanitary service lines. All elevations should be referenced to the same benchmark datum as the original design plans. Horizontal ties shall be referenced to lot lines, back of curb, or property corners.

i. All sanitary sewer piping shall be PVC pipe meeting the requirements of ASTM D-2241 with joints conforming to ASTM D-3139. All sanitary sewer fittings shall be PVC meeting the following requirements: 4" to 12" shall be Injection Molded Fittings meeting ASTM D-2241. Greater than 12" shall be Fabricated Fittings meeting ASTM D-2241 or C905. Minimum pressure rating shall be 150 psi.

j. The valves less than 16" shall be standard pattern, gate valves and shall have the name or mark of the manufacturer, size and working pressure plainly cast in raised letters on the valve body. Valves may be approved from one of the following manufacturers: American, Clow, Waterous or Kennedy.

k. Stainless steel nuts, bolts/T-bolts, and washers, Type 304 or better, will be required on all water main installations. This would apply to hydrants, tapping sleeves, valves, fittings, restraint, and other appurtenances buried or in valve vaults. Mechanical joints and restraint glands require 304 stainless steel T-bolts. An anti-seize compound shall be factory applied to nuts or bolts - any damage to this coating shall be repair with field applied approved anti-seize compound that is a molybdenum-base lubricant, Bostik Never-Seez or approved equal.

l. The contractor shall rotate and/or adjust any existing and/or new hydrant to the satisfaction of the Department of Public Utilities

m. Water mains shall be subjected to a hydrostatic/leakage test in accordance with Naperville Standard Specifications. Test pressure shall be no less than 150 psi for a period of 4 hours and not vary by more than + 5 psi. during the test. The test gauge shall be approved by the City and shall be glycerin or oil filled, with a range of not more than 200 psi and increments not greater than 5 psi, 4 " minimum dial size. Water recovery test shall be completed at the end of the testing period to show actual leaking and that the water main did not have too much trapped air in the tested section.

n. The City of Naperville DPU-W/WW does not guarantee that any valve or fitting in the existing water distribution system will hold against a hydrostatic/leakage test. The Contractor is solely responsible for providing an acceptable pressure test which shall include provisions around existing valves and fittings.

o. Fire hydrant should be bagged "NOT IN SERVICE" until all testing and disinfection has been completed and new water main section is service.

p. Sanitary sewer and water shall be constructed, tested, and placed into service in accordance with City of Naperville Standard Specification and Specifications for Water and Sewer Main Construction in Illinois, Latest Edition.

q. All valve boxes, vaults, hydrants, and manholes shall not be covered with construction debris and shall remain accessible to the respective utility company.

r. Water service line smaller than 3" shall be type K copper. If joints are required due to length of service, then only compression type coupling shall be permitted. No soldered or flared type joints are allowed.

s. All sanitary manholes shall be tested for leakage by vacuum testing. The manhole frame and adjusting rings shall be in place when testing. Any leaks shall be repaired from exterior of manhole - patching inside of manhole shall not be acceptable. A vacuum of 10" (254 mm) Hg shall be place on the manhole and the time shall be measured for the vacuum to drop to 9" (229 mm) Hg. The vacuum shall not drop below 9" (229 mm) Hg for the following time periods for each size of manhole:
   i. 48-inch diameter - 60 seconds
   ii. 60-inch diameter - 75 seconds
   iii. 72-inch diameter - 90 seconds
   iv. 84-inch diameter - 105 seconds
   Any manholes that fail the test shall be sealed and re-tested until acceptable.

t. The contractor shall provide internal televised inspection of all installed sanitary sewer, laterals, manholes and connections to the public system. Following completion of televising work, the contractor shall submit video recordings on DVD or flash drive along with a comprehensive televising report which will indicate the location, footages and nature of any defects. All defects shall be repaired to the satisfaction of the Water/Wastewater Utility and re-televised.

u. Contractor work hours are only allowed from 7:00 a.m. to 5:00 p.m., Monday through Saturday. No work shall be permitted on Sundays.

v. Sanitary pipes with less than 4 feet or more than 25 feet of cover shall be constructed of ductile iron piping (Class 50, minimum) and encased in polywrap.

w. All excavations more than 20 feet deep must be protected by a system designed by a registered professional engineer.

x. Contractor shall maintain 2' minimum clearance between existing utilities and new foundations and underground facilities. In areas where foundations and underground facilities are proposed adjacent to existing utilities, the contractor shall pot hole by vacuum excavation or hand excavation to locate the existing utility to verify minimum clearance requirement.

y. Fences shall be installed a minimum of 5 feet from any water or sanitary mains when running parallel with them. Where fences are installed crossing water or sanitary mains, the posts shall be located to have the main between them.

z. All brass components shall be certified to be lead free in compliance with NSF 61 and NSF 372 and identified with applicable markings.

OTHER NOTES:

A. Manholes shall be furnished with a self-sealing frame and solid cover (Neenah Foundry R-1772-CVH, East Jordan Iron Works 1022-3, or equal approved by the City Engineer) with the word "Sanitary" imprinted on the cover in raised letters (see Standard Detail SAN 3). Frames and lids shall meet or exceed AASHTO H-20 loading specifications.

B. Both the manhole frame and cover shall have machined horizontal and vertical bearing surfaces. Inverted manhole frames are not allowed.

C. Pick holes shall not create openings in the manhole cover.

D. Bolt-down frames and covers shall be Neenah Foundry R-1916-F1, East Jordan Iron Works 1040 ZPT or equal approved by the City Engineer. Frames are to be bolted to cone. Bolt-down frames shall be used where indicated on the plans.

E. Manhole frames shall be adjusted to proper grade using reinforced, precast concrete or fiberized rings. Brick or concrete blocks will not be allowed. Fiberized adjusting rings shall be required when frame will be with a roadway area. Final frame adjustment for manholes within the roadway area shall be in accordance with Sections 602 and 603 of Standard Specifications for Road and Bridge Construction, prepared by the Illinois Department of Transportation, latest edition.

F. All manhole frames and adjusting rings shall be securely sealed to the cone section or top barrel section of the manhole using resilient, flexible, non-hardening, preformed bituminous mastic material, Conseal 102 B or approved equal. The mastic shall be applied in such a manner that no surface water or ground water inflow can enter the manhole through gaps between the top barrel section or cone section and the first adjusting ring, between adjusting rings, or between the last adjusting ring and the manhole frame. Up to 12 inches (300 mm) of adjusting rings may be installed on a given manhole. No more than one 2-inch (50 mm) adjusting ring, and no more than two adjusting rings in total shall be used.

G. A continuous layer of non-hardening, preformed bituminous mastic material, Conseal 102 B or approved equal shall be applied to each manhole barrel cone and top section to provide a watertight seal.

H. All brass components shall be certified to be lead free in compliance with NSF 61 and NSF 372 and identified with applicable markings.

I. The sanitary forcemain shall be tested a minimum of one (1) hour at 1.5 times the shut off head of the pump, 2.5 times the operating pressure, or 20 psi, whichever is greatest. Allowable leakage shall be in accordance with section 41-2.14C of the Standard Specifications for Water and Sewer Construction.

TRANSPORTATION, ENGINEERING AND DEVELOPMENT BUSINESS GROUP STANDARD CONSTRUCTION PLAN NOTES FOR DEVELOPMENT PROJECTS

GENERAL NOTES

1. THE OWNER OR HIS/HER/THEIR REPRESENTATIVE IS RESPONSIBLE TO OBTAIN ANY AND ALL PERMITS REQUIRED BY APPLICABLE GOVERNMENTAL AGENCIES.

2. ALL WORK SHALL BE PERFORMED IN ACCORDANCE WITH THE CITY OF NAPERVILLE DESIGN MANUAL AND STANDARD SPECIFICATIONS (CURRENT EDITION) AND WITH THE ILLINOIS DEPARTMENT OF TRANSPORTATION'S "STANDARD SPECIFICATIONS FOR ROAD AND BRIDGE CONSTRUCTION" (CURRENT EDITION).

3. ALL CONTRACTORS DOING WORK IN THE PUBLIC RIGHT-OF-WAY MUST BE LICENSED (WHEN APPLICABLE) TO MAKE PUBLIC IMPROVEMENTS WITHIN THE NAPERVILLE CORPORATE LIMITS.

4. THE CONTRACTOR/DEVELOPER ASSUMES ALL RESPONSIBILITY AND LIABILITY FOR ANY ACTION RESULTING FROM THEIR WORK WITHIN THE PUBLIC RIGHT-OF-WAY.

5. THE CONTRACTOR/DEVELOPER SHALL INDEMNIFY AND HOLD HARMLESS THE CITY OF NAPERVILLE.

6. PRIOR TO COMMENCEMENT OF ANY OFF-SITE CONSTRUCTION, THE CONTRACTOR SHALL SECURE WRITTEN AUTHORIZATION THAT ALL OFF-SITE EASEMENTS HAVE BEEN SECURED AND THAT PERMISSION HAS BEEN GRANTED TO ENTER ONTO PRIVATE PROPERTY.

7. THE CONTRACTOR AND THEIR ON-SITE REPRESENTATIVES WILL BE REQUIRED TO ATTEND A PRE-CONSTRUCTION MEETING WITH THE CITY OF NAPERVILLE PRIOR TO ANY WORK BEING STARTED. A PRE-CONSTRUCTION MEETING WILL NOT BE SCHEDULED UNTIL THE PROJECT HAS BEEN APPROVED BY THE CITY OF NAPERVILLE DEVELOPMENT REVIEW TEAM AND THE REQUIRED SURETY HAS BEEN POSTED.

8. A MINIMUM OF 48 HOURS NOTICE SHALL BE GIVEN TO THE CITY OF NAPERVILLE TED BUSINESS GROUP (630-420-6082) PRIOR TO STARTING WORK OR RESTARTING WORK AFTER SOME ABSENCE OF WORK FOR ANY REASON.

9. IT SHALL BE THE CONTRACTOR'S RESPONSIBILITY TO ADEQUATELY IDENTIFY AND LOCATE ALL EXISTING UTILITIES PRIOR TO EXCAVATION. BEFORE STARTING CONSTRUCTION, THE CONTRACTOR SHALL CONTACT JULIE FOR THE LOCATION OF ANY AND ALL UTILITIES. THE TOLL-FREE NUMBER IS 800-892-0123. IT IS THE RESPONSIBILITY OF THE CONTRACTOR TO LOCATE ANY PRIVATE FACILITIES OR NON-JULIE MEMBER FACILITIES.

10. THE CONTRACTOR CAN SCHEDULE ALL NECESSARY SITE INSPECTIONS WITH THE CITY OF NAPERVILLE BY CALLING (630) 420-6082 BETWEEN THE HOURS OF 8:00AM AND 4:00PM (CLOSED 1:00PM TO 2:00PM DAILY) ON WEEKDAYS WHEN THE CITY IS OPEN FOR BUSINESS. THE CONTRACTOR WILL BE REQUIRED TO PROVIDE THE SITE PERMIT NUMBER FOR THE PROJECT IN ORDER TO SCHEDULE THE INSPECTION(S).

11. RECORD DRAWINGS ARE REQUIRED TO BE SUBMITTED AND APPROVED BY THE CITY OF NAPERVILLE PRIOR TO FINAL OCCUPANCY BEING GRANTED.

12. FINAL ACCEPTANCE OF PUBLIC IMPROVEMENTS SHALL BE GRANTED ONLY AFTER A FINAL INSPECTION HAS BEEN COMPLETED AND HAS REVEALED THAT ALL IMPROVEMENTS HAVE BEEN SATISFACTORILY COMPLETED IN ACCORDANCE WITH THE NAPERVILLE STANDARD SPECIFICATIONS. UTILITIES ARE NOT CONSIDERED ACCEPTED UNTIL THEY ARE FORMALLY ACCEPTED BY THE CITY COUNCIL AS REQUIRED IN ACCORDANCE WITH THE NAPERVILLE MUNICIPAL CODE.

STORM SEWER NOTES (GENERAL)

1. NO CONNECTION TO AN EXISTING PUBLIC STORM SEWER MAY BE MADE WITHOUT PERMISSION OF THE CITY ENGINEER.

2. THE CONTRACTOR SHALL REPAIR ANY EXISTING FIELD DRAINAGE TILE DAMAGED DURING CONSTRUCTION AND PROPERLY REROUTE AND/OR CONNECT SAID TILE TO THE NEAREST STORM SEWER OUTLET. ALL LOCATIONS OF ENCOUNTERED FIELD DRAINAGE TILE SHALL BE PROPERLY INDICATED ON THE CONTRACTOR'S RECORD DRAWINGS.

STORM SEWER NOTES (STORM SEWER WORK IN PLANS)

1. THE FOLLOWING MATERIALS ARE PERMITTED FOR STORM SEWER AND PIPE CULVERTS. WHERE A PARTICULAR MATERIAL IS SPECIFIED IN THE PLANS OR SPECIAL PROVISIONS, NO OTHER KIND OF MATERIAL WILL BE PERMITTED:

   a. REINFORCED CONCRETE PIPE (RCP) - REINFORCED CONCRETE PIPE SHALL CONFORM TO ASTM DESIGNATION C 76, CLASSES I, II, III, IV OR V. BITUMINOUS JOINTS SHALL CONFORM TO ASTM DESIGNATIONS C 14 OR C 76 AS MAY BE APPLICABLE. BITUMINOUS MATERIAL SHALL CONSIST OF A HOMOGENEOUS BLEND OF BITUMEN, INERT FILLER, AND SUITABLE SOLVENT APPROVED BY THE CITY ENGINEER. RUBBER GASKET JOINTS SHALL CONFORM TO ASTM C 433. REINFORCED CONCRETE PIPE SHALL ALSO BE PERMITTED AS ROUND, ELLIPTICAL, OR BOX SHAPED OR AS REINFORCED CONCRETE ARCH CULVERT.

   b. NON-REINFORCED CONCRETE PIPE - NON-REINFORCED CONCRETE PIPE SHALL BE ALLOWED FOR PIPES WITH A 10 INCH OR SMALLER DIAMETER. NON-REINFORCED CONCRETE PIPE SHALL CONFORM TO ASTM DESIGNATION C 14, CLASS 3. BITUMINOUS JOINTS SHALL CONFORM TO ASTM DESIGNATIONS C 14 OR C 76 AS MAY BE APPLICABLE. BITUMINOUS MATERIAL SHALL CONSIST OF A HOMOGENEOUS BLEND OF BITUMEN, INERT FILLER, AND SUITABLE SOLVENT APPROVED BY THE CITY ENGINEER. RUBBER GASKET JOINTS SHALL CONFORM TO ASTM C 443.

   c. DUCTILE IRON PIPE (DIP) - DUCTILE IRON PIPE SHALL CONFORM TO ANSI A 21.51 (AWWA C-151), CLASS THICKNESS DESIGNED PER ANSI A 21.50 (AWWA C-150), TAR (SEAL) COATED AND CEMENT LINED PER ANSI A 21.4 (AWWA C-104), WITH MECHANICAL OR RUBBER RING (SLIP SEAL OR PUSH ON) JOINTS. ALL DUCTILE IRON PIPE SHALL BE WRAPPED WITH POLYETHYLENE.

   d. POLYVINYL CHLORIDE PIPE (PVC) - POLYVINYL CHLORIDE (PVC) PIPE SHALL CONFORM TO ASTM D 3034, TYPE PSM. THE MINIMUM STANDARD DIMENSION RATIO (SDR) SHALL BE 26. THE PIPE SHALL BE MADE OF PVC PLASTIC HAVING A MINIMUM CELL CLASSIFICATION OF 12454-C, AND SHALL HAVE A MINIMUM PIPE STIFFNESS OF FORTY-SIX (46) LBS. PER INCH (317 KPA). JOINTS FOR PVC PIPE SHALL BE FLEXIBLE ELASTOMETRIC SEALS PER ASTM D 3212.

   e. HIGH DENSITY POLYETHYLENE PIPE (HDPE) - HIGH-DENSITY POLYETHYLENE (HDPE) PIPE SHALL CONFORM TO THE REQUIREMENTS OF AASHTO M 252 AND M 294. PIPE AND FITTINGS SHALL BE MADE FROM VIRGIN PE COMPOUNDS WHICH CONFORM TO THE REQUIREMENTS OF CELL CLASS 324420C AS DEFINED AND DESCRIBED IN ASTM D 3350. RUBBER GASKET JOINTS SHALL BE USED.

   f. FULLY GALVANIZED CORRUGATED STEEL PIPE - FULLY GALVANIZED CORRUGATED STEEL PIPE MAY BE USED FOR RESIDENTIAL DRIVEWAY CROSSINGS ONLY WHEN A DITCH SECTION IS PRESENT. THE MINIMUM CULVERT SIZE IS 12" DIAMETER.

2. BEDDING, OTHER THAN CONCRETE EMBEDMENT, SHALL CONSIST OF GRAVEL, CRUSHED GRAVEL, OR CRUSHED STONE 1/4 INCH TO 1 INCH IN SIZE. AS A MINIMUM, THE MATERIAL SHALL CONFORM TO THE REQUIREMENTS OF IDOT STANDARD SPECIFICATIONS. THE GRADATION SHALL CONFORM TO GRADATION CA-7 OR CA-11 OF THE STANDARD SPECIFICATIONS.

3. BACKFILL MATERIAL SHALL CONFORM TO THE REQUIREMENTS OF IDOT STANDARD SPECIFICATIONS. THE GRADATION SHALL CONFORM TO GRADATION CA-6 OF THE STANDARD SPECIFICATIONS. BACKFILL MATERIAL SHALL BE COMPACTED TO 95% STANDARD PROCTOR DENSITY.

4. JOINTS CONNECTING DISSIMILAR PIPE MATERIALS SHALL BE MADE WITH SEWER CLAMP NON-SHEAR TYPE COUPLINGS; CASCADE CSS, ROMAC LSS, FERNCO, INC. SHEAR RING, OR APPROVED EQUAL. WHEN AVAILABLE, A STANDARD JOINT WITH A TRANSITION GASKET MAY BE USED. THE NAME OF THE MANUFACTURER, CLASS, AND DATE OF ISSUE SHALL BE CLEARLY IDENTIFIED ON ALL SECTIONS OF PIPE. THE CONTRACTOR SHALL ALSO SUBMIT BILLS OF LADING, OR OTHER QUALITY ASSURANCE DOCUMENTATION WHEN REQUESTED BY THE CITY ENGINEER. ALL NUTS AND BOLTS FOR COUPLINGS SHALL BE STAINLESS STEEL.

5. MANHOLES FOR STORM SEWERS SHALL HAVE A MINIMUM INSIDE DIAMETER OF 48 INCHES AND SHALL BE CONSTRUCTED OF PRECAST CONCRETE UNITS IN ACCORDANCE WITH ASTM C478-05 (OR LATEST EDITION) AND SHALL CONFORM TO THE CITY OF NAPERVILLE STANDARD DETAIL. ALL MANHOLES SHALL BE WATER-TIGHT. ALL VISIBLE LEAKS SHALL BE SEALED IN A MANNER ACCEPTABLE TO THE CITY ENGINEER.

6. MANHOLES SHALL BE FURNISHED WITH A SELF-SEALING FRAME AND SOLID COVER (EAST JORDAN IRON WORKS 1022 WITH TYPE A SOLID COVER, OR APPROVED EQUAL) WITH THE WORD "STORM" IMPRINTED ON THE COVER IN RAISED LETTERS. ALL FRAMES AND LIDS SHALL MEET OR EXCEED AASHTO H-20 LOADING SPECIFICATIONS. FRAMES SHALL BE SHOP PAINTED WITH ASPHALTIC BASE PAINT. BOTH THE MANHOLE FRAME AND COVER SHALL HAVE MACHINED HORIZONTAL AND VERTICAL BEARING SURFACES. INVERTED MANHOLE FRAMES ARE NOT ALLOWED. PICK HOLES SHALL NOT CREATE OPENINGS IN THE MANHOLE COVER.

7. MANHOLE STEPS ON MAXIMUM 16 INCH CENTER SHALL BE FURNISHED WITH EACH MANHOLE, SECURELY ANCHORED IN PLACE, TRUE TO VERTICAL ALIGNMENT, IN ACCORDANCE WITH THE NAPERVILLE STANDARD DETAILS. STEPS SHALL BE COPOLYMER POLYPROPYLENE REINFORCED WITH 1/2 INCH A615/A615M-05A (OR LATEST EDITION) GRADE 60 STEEL REINFORCEMENT, MEETING OR EXCEEDING ASTM C 478-05 (OR LATEST EDITION) AND OSHA STANDARDS.

8. CATCH BASINS AND INLETS SHALL HAVE A MINIMUM INSIDE DIAMETER OF 24 INCHES AND SHALL BE CONSTRUCTED OF PRECAST CONCRETE UNITS IN ACCORDANCE WITH ASTM C478-05 (OR LATEST EDITION) AND SHALL CONFORM TO THE CITY OF NAPERVILLE STANDARD DETAIL. ALL CATCH BASINS AND INLETS SHALL BE WATER-TIGHT AT ALL POINTS BELOW GRADE. ALL VISIBLE LEAKS SHALL BE SEALED IN A MANNER ACCEPTABLE TO THE CITY ENGINEER. CATCH BASINS AND INLETS SHALL BE FURNISHED WITH A FRAME AND GRATE BASED UPON THE LOCATION OF THE INSTALLATION AS LISTED BELOW. ALL FRAMES AND

   GRATES SHALL MEET OR EXCEED AASHTO H-20 LOADING SPECIFICATIONS. FRAMES SHALL BE SHOP PAINTED WITH ASPHALTIC BASE PAINT.

   a. PAVEMENT: EAST JORDAN IRON WORKS 1022 FRAME WITH TYPE M1 RADIAL FLAT GRATE, OR APPROVED EQUAL.

   b. BARRIER CURB AND GUTTER: EAST JORDAN IRON WORKS 7220 FRAME WITH TYPE M1 GRATE AND T1 CURB BOX, OR APPROVED EQUAL.

   c. DEPRESSED CURB: EAST JORDAN IRON WORKS 5120 FRAME AND GRATE, OR APPROVED EQUAL.

   d. MOUNTABLE CURB: EAST JORDAN IRON WORKS 7525 FRAME AND GRATE, OR APPROVED EQUAL.

   e. NON-PAVED AREAS: EAST JORDAN IRON WORKS 6527 BEEHIVE GRATE, OR APPROVED EQUAL. ALTERNATELY, IN AREAS WHERE THERE IS THE LIKELIHOOD OF PEDESTRIAN TRAFFIC, EAST JORDAN IRON WORKS 1022 FRAME WITH TYPE M1 RADIAL FLAT GRATE, OR APPROVED EQUAL MAY BE USED.

9. ALL PIPE SHALL BE LAID TRUE TO LINE AND GRADE. DIRT AND OTHER FOREIGN MATERIAL SHALL BE PREVENTED FROM ENTERING THE PIPE OR PIPE JOINT DURING HANDLING OR LAYING OPERATIONS. ALL STORM SEWER PIPE TO PIPE CONNECTIONS SHALL BE SEALED WITH BUTYL MASTIC TO ENSURE WATER TIGHTNESS. LIFT HOLES TO BE SEALED USING BUTYL MASTIC AND CONCRETE PLUGS. AT NO TIME SHALL CONNECTIONS BETWEEN THE STORM SEWER AND SANITARY SEWER BE ALLOWED.

10. FOR STRUCTURES LOCATED IN PAVED AREAS, A MINIMUM OF FOUR, 2-INCH DIAMETER HOLES SHALL BE DRILLED OR PRECAST INTO THE STRUCTURE WITHIN 1 FOOT OF THE LOWEST PIPE INVERT. THE HOLES SHALL BE DISTRIBUTED EQUIDISTANT AROUND THE PERIMETER OF THE STRUCTURE. A 1-FOOT BY 1- FOOT SECTION OF UNDERDRAIN FILTER CLOTH MATERIAL SHALL BE SUFFICIENTLY FIXED TO THE OUTSIDE OF THE MANHOLE WITH MASTIC MATERIAL TO PREVENT SLIPPAGE DURING BACKFILLING.

    ADJUSTMENTS MAY BE NECESSARY TO ENSURE THAT FRAMES AND GRATES MATCH THE ELEVATION OF THE SURROUNDING PAVEMENT OR GROUND SURFACE. PREFORMED ADJUSTING RINGS OF THE PROPER DIMENSIONS NEEDED TO MATE THE FRAME TO THE PRECAST STRUCTURE SHALL BE USED. NO MORE THAN 12 INCHES OF VERTICAL ADJUSTMENT MAY BE MADE USING THE MINIMUM PRACTICAL NUMBER OF INDIVIDUAL RINGS.

    ALL RINGS SHALL BE HIGH DENSITY POLYETHYLENE PLASTIC (HDPE), RECYCLED RUBBER, HIGH DENSITY EXPANDING POLYSTYRENE, EXPANDED POLYPROPYLENE (EPP), OR OTHER MATERIAL AS APPROVED BY THE CITY ENGINEER. PRECAST CONCRETE RINGS, BRICKS, ROCKS, SHIMS, OR CONCRETE BLOCKS WILL NOT BE ALLOWED. TAPERED ADJUSTING RINGS SHALL BE REQUIRED WHEN THE FRAME WILL NEED TO MATCH THE SLOPE OF THE ROADWAY.

    A RESILIENT, FLEXIBLE, NON-HARDENING, PREFORMED BITUMINOUS MASTIC MATERIAL, CONSEAL 102 B OR APPROVED EQUAL, SHALL BE USED BETWEEN THE CONE OR TOP BARREL SECTION OF THE STRUCTURE AND THE ADJUSTING RINGS. A THICK BEAD OF NON-HARDENING ELASTOMERIC JOINT SEALANT CONFORMING TO ASTM C-920, TYPE S, GRADE NS, SHALL BE APPLIED BETWEEN ALL INDIVIDUAL RINGS, AND BETWEEN THE ADJUSTING RINGS AND THE FRAME. THE SEALANT OR MASTIC MATERIAL SHALL BE APPLIED IN SUCH A MANNER THAT NO SURFACE WATER OR GROUND WATER INFLOW CAN ENTER THE STRUCTURE.

    ALL STORM SEWER STRUCTURE FRAMES WITHOUT INSIDE FLANGES SHALL BE SHAPED WITH HYDRAULIC CEMENT OR ELASTOMERIC JOINT SEALANT TO FORM A FILLET TO THE STRUCTURE OR ADJUSTING RINGS AND TO MAINTAIN WATER-TIGHTNESS.

    FRAME ADJUSTMENTS SHALL BE COMPLETED IN ACCORDANCE WITH SECTIONS 602 AND 603 OF STANDARD SPECIFICATIONS FOR ROAD AND BRIDGE CONSTRUCTION, PREPARED BY THE ILLINOIS DEPARTMENT OF TRANSPORTATION, LATEST EDITION, EXCEPT AS NOTED HEREIN.

EROSION CONTROL AND DRAINAGE NOTES (GENERAL)

1. THE CONTRACTOR SHALL MAINTAIN PROPER DRAINAGE AT ALL TIMES DURING THE COURSE OF CONSTRUCTION AND PREVENT STORM WATER FROM RUNNING INTO OR STANDING IN EXCAVATED AREAS.

2. DURING EXTENDED DRY PERIODS, THE CONSTRUCTION AREA(S) MAY NEED TO BE WATERED DOWN TO PREVENT THE BLOWING OF SOIL FROM THE SITE.

3. DURING CONSTRUCTION, A STABILIZED CONSTRUCTION ENTRANCE SHALL BE UTILIZED TO MINIMIZE THE TRACKING OF DIRT ONTO THE PUBLIC STREETS. IT IS THE CONTRACTOR'S RESPONSIBILITY TO KEEP PUBLIC STREET PAVEMENT CLEAN OF DIRT AND DEBRIS. ANY DIRT THAT IS TRACKED ONTO THE PUBLIC STREETS SHALL BE REMOVED THE SAME DAY. IF THE AMOUNT TRACKED ON THE PUBLIC STREET IS EXCESSIVE, CLEANING MAY BE REQUIRED MORE FREQUENTLY.

EROSION CONTROL AND DRAINAGE NOTES (PROJECT SPECIFIC)

1. ALL EROSION CONTROL MEASURES SHALL BE PROPERLY INSTALLED, AS PERMITTED, PRIOR TO ANY LAND DISTURBANCE ACTIVITIES. ALL EROSION CONTROL SHALL BE MAINTAINED UNTIL TURF IS ESTABLISHED.

2. ACCEPTABLE PERIMETER EROSION CONTROL INCLUDES SILT FENCE, SILT WORM AND ANY OTHER APPLICATION APPROVED BY THE CITY ENGINEER.

3. ALL OPEN GRATE STRUCTURES SHALL HAVE EROSION CONTROL PROTECTION IN ACCORDANCE WITH THE APPROVED EROSION CONTROL PLANS. INLET BASKETS ARE THE PREFERRED METHOD; STRAW BALES SHALL NOT BE USED.

4. STOCKPILES NOT BEING DISTURBED FOR MORE THAN 14 DAYS SHALL BE SEEDED.

5. ALL EROSION CONTROL MEASURES SHALL BE INSPECTED WEEKLY, AFTER ANY 0.5 INCH RAINFALL, OR MORE FREQUENTLY AS NECESSARY TO MAINTAIN THEIR FUNCTION.

6. IT IS THE RESPONSIBILITY OF THE OWNER OR HIS DESIGNEE TO INSPECT ALL TEMPORARY EROSION CONTROL MEASURES PER THE REQUIREMENTS OF THE NPDES PERMIT AND CORRECT ANY DEFICIENCIES AS NEEDED.

GEOMETRIC AND PAVING NOTES (GENERAL)

1. THE DEVELOPER AND CONTRACTOR SHALL HAVE THE RESPONSIBILITY TO ADEQUATELY PROTECT THE PAVEMENT AND PROPERTY, CURB AND GUTTER AND OTHER RIGHT-OF-WAY IMPROVEMENTS, WHETHER NEWLY CONSTRUCTED OR EXISTING, FROM ANY AND ALL DAMAGE. SUFFICIENT MEANS SHALL BE EMPLOYED BY THE CONTRACTOR TO PROTECT AGAINST SUCH DAMAGE TO THE SATISFACTION OF THE CITY ENGINEER.

2. ANY NEW OR EXISTING IMPROVEMENTS THAT ARE DAMAGED SHALL BE REPAIRED OR REPLACED IN A MANNER THAT IS SATISFACTORY TO THE CITY ENGINEER.

3. THE CONTRACTOR AND/OR DEVELOPER SHALL SECURE ALL NECESSARY RIGHTS AND PERMISSIONS TO PERFORM ANY WORK ON PRIVATE PROPERTY NOT WITHIN THE OWNERSHIP RIGHTS OF THE DEVELOPER. THE DEVELOPER SHALL BEAR THE SOLE RESPONSIBILITY FOR DAMAGES THAT MAY OCCUR AS A RESULT OF WORK PERFORMED UNDER CONTRACTS THEY INITIATE.

4. THE CONTRACTOR/DEVELOPER WILL BE RESPONSIBLE FOR BRINGING PAVEMENTS (STREET, CURB AND GUTTER, SIDEWALK, DRIVEWAY) ON THE PROPERTY UP TO CITY STANDARDS INCLUDING ANY REPAIRS TO SUBSTANDARD PAVEMENTS THAT EXISTED PRIOR TO OR OCCURRED DURING CONSTRUCTION.

5. WHEREVER NEW WORK WILL MEET EXISTING CONDITIONS OTHER THAN LAWN AREAS, REGARDLESS OF WHETHER THE NEW OR EXISTING WORK IS ASPHALT OR CONCRETE, THE EXISTING ADJACENT SIDEWALK, DRIVEWAYS, PAVEMENT OR CURB SHALL BE NEATLY SAW CUT. THE SAW CUT SHALL BE IN A NEAT STRAIGHT LINE SUFFICIENTLY DEEP SO THAT IT RENDERS A SMOOTH VERTICAL FACE TO MATCH TO. IF THE CONTRACTOR IS NOT CAREFUL OR DOES NOT SAW DEEP ENOUGH AND THE CUT LINE BREAKS OUT OR CHIPS TO AN IMPERFECT EDGE, THEN THE EXISTING SIDE MUST BE RE-CUT SQUARE AND DONE OVER UNTIL IT IS CORRECT.

TRAFFIC CONTROL AND PROTECTION NOTES (GENERAL)

1. ALL DEVELOPERS AND CONTRACTORS SHALL PROVIDE SUITABLE TRAFFIC CONTROL FOR THEIR CONSTRUCTION ACTIVITIES IN ACCORDANCE WITH PART 6 OF THE MANUAL ON UNIFORM TRAFFIC CONTROL DEVICES (MUTCD), LATEST EDITION. TRAFFIC CONTROL MUST BE PROVIDED FOR ANY ACTIVITY THAT IMPACTS TRAFFIC FLOW. THIS INCLUDES, BUT IS NOT LIMITED TO, ROAD CLOSURES REQUIRING DETOURS, DAILY LANE CLOSURES, LONG TERM LANE CLOSURES, NARROW LANES, AND CONSTRUCTION VEHICLES ENTERING AND EXITING THE PUBLIC ROADWAY. ALL TRAFFIC CONTROL SET- UPS MAY BE INSPECTED BY THE CITY OF NAPERVILLE TO ENSURE THAT THEY ARE PROVIDING POSITIVE GUIDANCE TO MOTORISTS AND ARE NOT IN THEMSELVES PRESENTING A HAZARDOUS SITUATION. A REPRESENTATIVE OF THE DEVELOPER OR CONTRACTOR MUST PROVIDE PHONE NUMBERS AT WHICH THEY CAN BE REACHED 24 HOURS A DAY AND ON WEEKENDS SO THAT THEY CAN MAINTAIN TRAFFIC CONTROL DEVICES.

2. PEDESTRIANS MUST BE PROVIDED WITH A SAFE ALTERNATE ROUTE IF PEDESTRIAN FACILITIES ARE TO BE CLOSED AS A RESULT OF CONSTRUCTION ACTIVITIES. GUIDANCE MUST BE PROVIDED TO PEDESTRIANS SO THAT THEY MAY AVOID THE WORK ZONE. SAID PEDESTRIAN DETOUR PLAN (WITH SIGNAGE) IS TO BE REVIEWED AND ACCEPTED BY THE CITY IN WRITING, PRIOR TO THE COMMENCEMENT OF THE WORK.

3. THE CONTRACTOR SHALL EMPLOY THE APPROPRIATE METHODS OF TRAFFIC CONTROL IN ACCORDANCE WITH THE PLANS, SPECIFICATIONS AND THE MANUAL ON UNIFORM TRAFFIC CONTROL DEVICES, SUCH THAT THE SAFETY OF VEHICLES, AND PEDESTRIANS IS PRESERVED AT ALL TIMES. THE ERECTION AND MAINTENANCE OF THE TRAFFIC CONTROL DEVICES SHALL BE TO THE SATISFACTION OF THE AGENCY OF JURISDICTION AND THE CITY ENGINEER.

4. ANY TEMPORARY OPEN HOLES SHOULD BE BARRICADED AND PROTECTED IN ACCORDANCE WITH APPLICABLE STANDARDS.

5. A MINIMUM 72 HOUR NOTICE IS REQUIRED FOR TRAFFIC CONTROL THAT REDUCES THE WIDTH OF A TRAVEL LANE LESS THAN 12 FEET OR CLOSES A LANE. APPROVAL FROM THE CITY ENGINEER WILL BE REQUIRED PRIOR TO THE IMPLEMENTATION OF SUCH TRAFFIC CONTROL LAYOUT.

6. LANE CLOSURES ON ARTERIAL ROADWAYS WITHIN THE CITY OF NAPERVILLE ARE NOT PERMITTED BETWEEN THE HOURS OF 6AM-9AM AND 3PM-7PM MONDAY THROUGH FRIDAY, UNLESS OTHERWISE PERMITTED BY THE CITY ENGINEER. LANE CLOSURES ON ARTERIAL STREETS ARE PERMITTED BETWEEN 7AM AND 7PM ON WEEKENDS, UNLESS OTHERWISE PERMITTED BY THE CITY ENGINEER. ARTERIAL ROADWAYS ARE DEFINED AS BOTH MAJOR AND MINOR ARTERIAL ROADWAYS AS DESIGNATED ON THE CITY'S MASTER THOROUGHFARE PLAN, LATEST EDITION.

7. ANY WORK THAT IMPACTS A TRAFFIC LANE ON AN ARTERIAL ROADWAY REQUIRES AN ARROWBOARD AS PART OF THE TRAFFIC CONTROL.

8. AT THE END OF EACH DAY OF WORK, THE ROADWAY MUST BE COMPLETELY REOPENED TO TRAFFIC. ANY OPEN HOLES MUST BE PLATED OR COLD PATCHED; THE CITY WILL NOT ALLOW THE HOLES TO BE FILLED WITH GRAVEL.

DEPARTMENT OF PUBLIC UTILITIES - ELECTRIC GENERAL NOTES

1. CT/METER EQUIPMENT ARE LONG LEAD TIME ITEMS AND DPU-E SHALL NOT BE HELD RESPONSIBLE FOR DELAYS RESULTING FROM NON-COMPLIANT CT/METER EQUIPMENT.

2. PLEASE PROVIDE NAME AND CONTACT INFORMATION FOR ELECTRICAL CONTRACTOR FOR THIS PROJECT.

3. DPUE WILL PROVIDE, INSTALL, AND MAINTAIN THE TRANSFORMERS, ALL PRIMARY (15KV) CABLE AND CONDUIT, AND THE METERS AND INSTRUMENT TRANSFORMERS. DPUE WILL ALSO MAKE THE FINAL CONNECTIONS IN THE TRANSFORMERS ONCE THE INSPECTION IS COMPLETE AND THE BUILDING IS READY TO BE ENERGIZED.

4. THE DEVELOPER SHALL COORDINATE SITE CONSTRUCTION WITH DPU-E TO ALLOW ELECTRIC FACILITIES TO BE INSTALLED PRIOR PAVING AND CURBING. DPU-E REQUIRES 30 WORKING DAYS ADVANCE WRITTEN NOTICE PRIOR TO PAVEMENT INSTALLATION TO ALLOW FOR THE INSTALLATION OF ELECTRIC FACILITIES. GRADE ELEVATION MUST BE WITHIN 4" OF FINAL GRADING BEFORE ELECTRIC FACILITIES CAN BE INSTALLED.

5. ELECTRIC FACILITIES SHALL BE INSTALLED PURSUANT TO SECTION 8-1C-3 OF THE CITY OF NAPERVILLE MUNICIPAL CODE, WHICH REQUIRES A CONSTRUCTION FEE PAYMENT FOR INSTALLATION OF ELECTRIC FACILITIES.

6. AT ALL TIMES, THE CUSTOMER SHALL BE SOLELY RESPONSIBLE FOR MAINTAINING A SUITABLE APPROACH TO THE METER LOCATION, WITH NO OBSTRUCTIONS WITHIN FOUR (4') FEET OF THE FRONT AND TWO (2') FEET OF THE SIDES OF THE METER. PER NAPERVILLE SERVICE RULES AND POLICIES 22.2.F.

7. CLEARANCE TO TRANSFORMER PAD SHALL BE 5' FROM ALL SIDES, 10' FROM FRONT, AND THE AREA ABOVE MUST BE COMPLETELY CLEAR OF OBSTRUCTION. NO TREES, SHRUBS, OR OTHER OBSTACLES WILL BE ALLOWED WITHIN THIS AREA. TRANSFORMER PAD SHALL MAINTAIN MINIMUM CLEARANCE OF 20' FROM EGRESS POINTS. PER DPUE SPECIFICATIONS C10-2130 AND C30-0016.

8. DPU-E REQUIRES A MINIMUM 5' OF SEPARATION BETWEEN ITS ELECTRIC FACILITIES AND ANY FIRE HYDRANTS STORM DRAINS, STORM SEWERS, WATER MAINS, GAS MAINS, ETC. THAT RUN PARALLEL TO ITS FACILITIES.

9. TO HAVE AN EXISTING SERVICE DISCONNECTED CALL THE CITY DISPATCH OFFICE AT 630-420-6187. PLEASE ALLOW AT LEAST 24 HOURS' NOTICE. METERS AND METER SEALS ARE TO BE REMOVED ONLY BY DPU-E PERSONNEL. THE LOCATION AND TYPE OF NEW OR REPLACEMENT METER RELATED EQUIPMENT MUST BE PRE-APPROVED IN WRITING BY DPU-E. AN ELECTRIC SERVICE MUST BE INSPECTED BY THE DEVELOPMENT SERVICES TEAM ELECTRICAL INSPECTOR PRIOR TO CONNECTION.

10. LABEL ALL METER SOCKETS WITH THE COMPLETE ADDRESS IN 1" LETTERS USING PERMANENT STICKERS. IN MULTIPLE METER BANKS, THE COMPLETE ADDRESS MAY BE ON THE DISCONNECT SWITCH AND THE SUITE NUMBERS ON THE METER SOCKETS. THE ELECTRICAL SERVICE EQUIPMENT WILL NOT PASS INSPECTION WITHOUT APPROPRIATE ADDRESS LABELING.

11. APPROVAL OF METERING EQUIPMENT BY DPU-E DOES NOT REMOVE YOUR RESPONSIBILITY TO COMPLY WITH THE LATEST VERSION OF THE NATIONAL ELECTRICAL CODE AS ADOPTED BY THE CITY OF NAPERVILLE. DETERMINATION OF COMPLIANCE WITH THE NATIONAL ELECTRICAL CODE WILL BE MADE BY THE TRANSPORTATION, ENGINEERING AND DEVELOPMENT DEPARTMENT.

12. A CUSTOMER'S GROUNDING CONDUCTOR SHALL NOT BE CONNECTED TO DPU-E DISTRIBUTION EQUIPMENT.

13. DPU-E WILL INSTALL AND ENERGIZE ALL METERS IN A MULTIPLE METER BANK AT ONE TIME, PROVIDED ALL METER SOCKETS PASS INSPECTION. IN THE EVENT OF AN INCOMPLETE INSTALLATION, ONLY THE INSPECTED AND APPROVED EQUIPMENT SHALL BE ENERGIZED AND A METER INSTALLED. INDIVIDUAL TENANT PERMITS WILL BE REQUIRED FOR INSTALLATION OF THE OTHER METERS IN THE METER BANK.

14. DUE TO SUPPLY CHAIN ISSUES DPU-E IS EXPERIENCING LONG LEAD TIMES (+400 DAYS) ON TRANSFORMERS. PLEASE TAKE THIS INTO CONSIDERATION WHEN PLANNING CONSTRUCTION.

REVISION RECORD

NO	DATE	DESCRIPTION
1	01/19/2026	NO REVISIONS THIS SHEET
2	03/17/2026	NO REVISIONS THIS SHEET
3	04/27/2026	NO REVISIONS THIS SHEET

ENGINEERING, SURVEYING AND LANDSCAPE ARCHITECTURE IN THE STATE OF NORTH CAROLINA WILL BE PROVIDED BY CEC SURVEYING AND LANDSCAPE ARCHITECTS OF NC, PLLC. SERVICES IN PUERTO RICO WILL BE PROVIDED BY CEC ENGINEERS & CONSULTANTS, LLC. LANDSCAPE ARCHITECTURE SERVICES IN THE STATE OF OHIO WILL BE PROVIDED BY CEC LANDSCAPE ARCHITECTS, LLC.

Civil & Environmental Consultants, Inc.
1230 East Diehl Road
Suite 200
Naperville, IL 60563
Ph: 630.963.6026
www.cecinc.com

REDSTART CONSTRUCTION, INC.
BAUER ROAD DUPLEXES
27W240 BAUER ROAD
NAPERVILLE, ILLINOIS 60563

SITE SPECIFICATIONS - 3

DATE:	OCTOBER 21, 2025	DRAWN BY:	ET
DWG SCALE:	NOT TO SCALE	CHECKED BY:	MAJ
PROJECT NO:	347-703		
APPROVED BY:	*JGC		

DRAWING NO.: **C003**

SHEET 4 OF 12

EXHIBIT E

NORTH

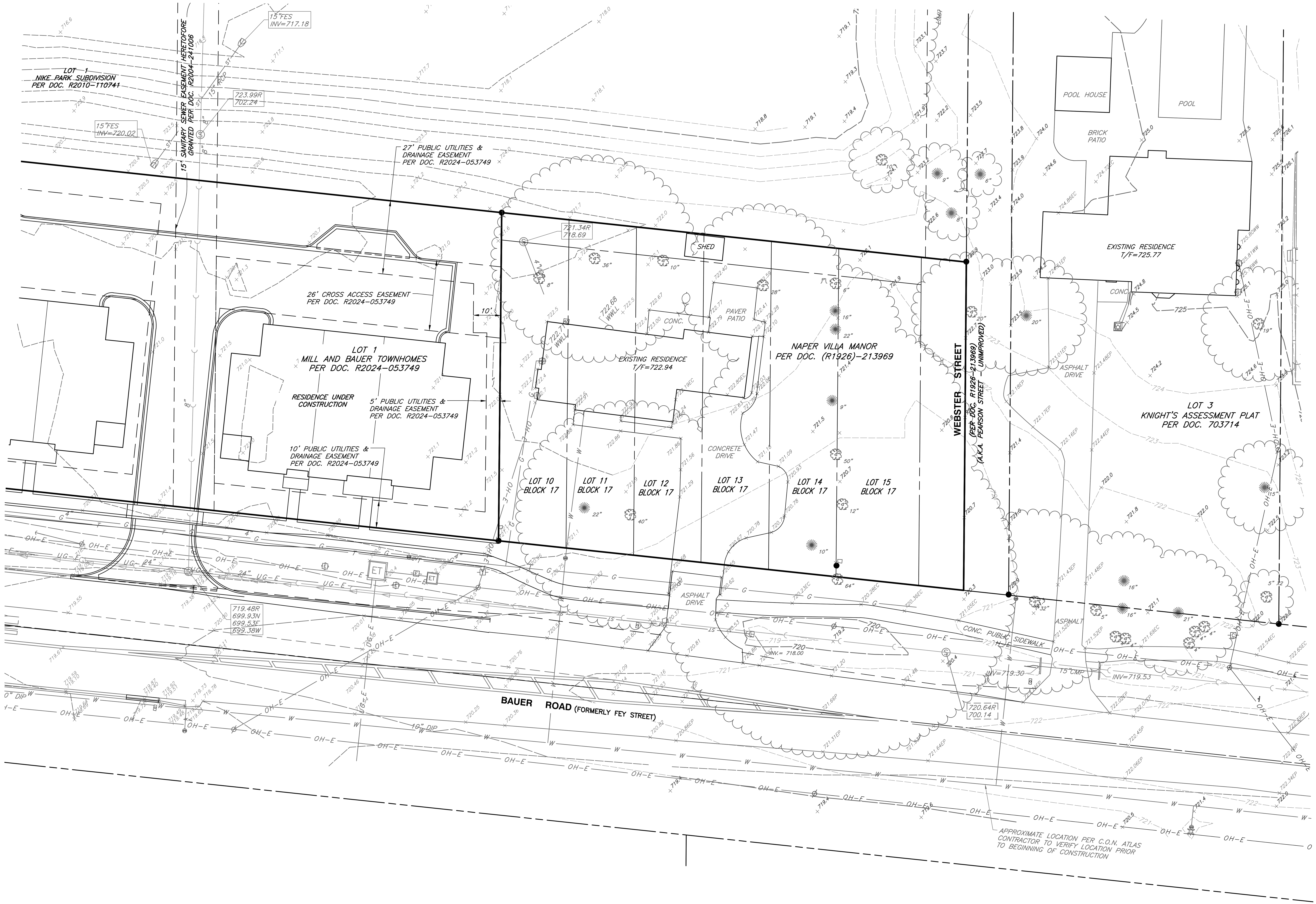

REFERENCE

1. EXISTING CONDITIONS ARE BASED UPON FIELD OBSERVATIONS MADE ON AUGUST 21, 2025 BY CIVIL & ENVIRONMENTAL CONSULTANTS, INC.
1. FIELD DATUM: ILLINOIS STATE PLANE NSRS 2011, EAST ZONE– US SURVEY FOOT CITY OF NAPERVILLE DATUM NAVD 88.
2. UNDERGROUND UTILITY INFORMATION SHOWN HEREON IS BASED UPON FIELD OBSERVATIONS, ATLAS MAPS PROVIDED BY THE CITY OF NAPERVILLE AND THOSE PUBLIC UTILITY COMPANIES OPERATING UNDER FRANCHISE OR CONTRACT WITH THE CITY OF NAPERVILLE.

SCALE IN FEET
0 20 40

REVISION RECORD

NO	DATE	DESCRIPTION
1	01/16/2026	NO REVISIONS THIS SHEET
2	03/17/2026	NO REVISIONS THIS SHEET
3	04/27/2026	NO REVISIONS THIS SHEET

ENGINEERING, SURVEYING AND LANDSCAPE ARCHITECTURE IN THE STATE OF NORTH CAROLINA WILL BE PROVIDED BY CEC ENGINEERING AND LANDSCAPE ARCHITECTS OF NC, PLLC. SERVICES IN PUERTO RICO WILL BE PROVIDED BY CEC ENGINEERS & CONSULTANTS, LLC. LANDSCAPE ARCHITECTURE SERVICES IN THE STATE OF OHIO WILL BE PROVIDED BY CEC LANDSCAPE ARCHITECTS, LLC.

Civil & Environmental Consultants, Inc.
1230 East Diehl Road
Suite 200
Naperville, IL 60563
Ph: 630.963.6026
www.cecinc.com

REDSTART CONSTRUCTION, INC.
BAUER ROAD DUPLEXES
27W240 BAUER ROAD
NAPERVILLE, ILLINOIS 60563

EXISTING CONDITIONS

DATE:	OCTOBER 21, 2025	DRAWN BY:	ET
DWG SCALE:	1" = 20'	CHECKED BY:	MAJ
PROJECT NO:	347-703	APPROVED BY:	*JGC

DRAWING NO.:
C100
SHEET 5 OF 12

EXHIBIT E

NORTH

DEMOLITION LEGEND

(shaded box)	BITUMINOUS PAVEMENT REMOVAL
(light hatch)	INDICATES CONCRETE ITEM, RETAINING/STONE WALL OR UTILITY SERVICE TO BE REMOVED
(heavy hatch)	BUILDING TO BE REMOVED
X	INDICATES NON–CONCRETE ITEM, STRUCTURE, OR TREE TO BE REMOVED
(tree symbol) P	TREES TO BE PROTECTED WITH FENCING
—— SF ——	SILT FENCE
——o——o——	CONSTRUCTION FENCE (CHAIN LINK)

DEMOLITION NOTES:

1. ALL PAVEMENTS, UTILITIES, TREES, ETC. WITHIN THE SUBJECT PROPERTY SHALL BE COMPLETELY REMOVED. REMOVAL ITEMS SHOWN OUTSIDE OF THE PROPERTY LIMITS ARE APPROXIMATE AND MAY OR MAY NOT CONSTITUTE ALL WORK NECESSARY TO CONSTRUCT THE PROJECT. REMOVAL OF PUBLIC SIDEWALKS, ROADWAYS, DRIVEWAYS, CURB & GUTTER, PUBLIC UTILITIES, ETC., SHALL BE STAGED BY THE CONTRACTOR WITH CONCURRENCE FROM THE OWNER, ENGINEER, AND THE CITY OF NAPERVILLE STAFF.
2. TRENCHES, WITHIN PROPOSED PAVED OR BUILDING PAD AREAS, RESULTING FROM THE REMOVAL OF EXISTING UTILITIES SHALL BE BACKFILLED IN ACCORDANCE WITH THE APPLICABLE REQUIREMENTS OF ART. 550.07 OF THE IDOT STANDARD SPECIFICATIONS FOR ROAD AND BRIDGE CONSTRUCTION.
3. ALL EXISTING PAVEMENT WITHIN THE CONSTRUCTION LIMITS, INCLUDING BITUMINOUS PAVEMENT, DRIVEWAYS, CONCRETE SLABS, AND SIDEWALKS SHALL BE COMPLETELY REMOVED. AGGREGATE MATERIALS APPROVED AS SUITABLE FILL BY THE SOILS ENGINEER SHALL BE SET ASIDE FOR FUTURE PLACEMENT.
4. ALL TREES, LANDSCAPE MATERIALS AND BRUSH WITHIN THE CONSTRUCTION LIMITS SHALL BE REMOVED. TREE STUMPS AND/OR ROOT BALLS SHALL BE COMPLETELY REMOVED. TREES TO REMAIN SHALL BE PROTECTED FROM CONSTRUCTION ACTIVITY. THE CONTRACTOR SHALL VISIT THE SITE PRIOR TO FINALIZING HIS BID FOR TREE REMOVAL.
5. EXISTING UTILITY LOCATIONS ARE BASED ON THE BEST AVAILABLE INFORMATION. THE CONTRACTOR IS RESPONSIBLE FOR VERIFYING ALL EXISTING UTILITY LOCATIONS PRIOR TO CONSTRUCTION. THE CONTRACTOR SHALL BE SOLELY RESPONSIBLE FOR ANY DAMAGE TO EXISTING UTILITIES THAT ARE INTENDED TO CONTINUE TO PROVIDE SERVICE WHETHER THESE UTILITIES ARE SHOWN ON THE PLANS OR NOT. THIS SHALL INCLUDE PRIVATE SERVICES AS WELL.
6. ALL DEBRIS FROM DEMOLITION SHALL BE HAULED OFF SITE AND DISPOSED OF BY LEGAL MEANS.
7. ALL WORK SHALL BE DONE IN GENERAL ACCORDANCE WITH THE STANDARDS AND REQUIREMENTS CONTAINED IN THE MUNICIPAL "SOIL EROSION AND SEDIMENTATION CONTROL" ORDINANCE. THE CONTRACTOR SHALL INSTALL THE NECESSARY EROSION AND SEDIMENTATION CONTROL DEVICES THAT WILL PROTECT THE EXISTING STORM SEWERS, PUBLIC ROADWAYS, AND ADJACENT PROPERTIES FROM SEDIMENT THAT MAY ARISE FROM THE PROPOSED DEMOLITION AND/OR CONSTRUCTION. DEVICES SHALL INCLUDE SILT FENCE, FILTER BASKETS INSERTED INTO DRAINAGE STRUCTURES, CONSTRUCTION ENTRANCE, PAVEMENT CLEANING, ETC. THE COST OF THIS WORK WILL NOT BE PAID FOR SEPARATELY BUT SHALL BE CONSIDERED INCIDENTAL TO THE CONTRACT.
8. DURING DEWATERING OPERATIONS, WATER WILL BE PUMPED INTO SEDIMENT BASINS OR SILT TRAPS. CONCRETE TRUCKS SHALL NOT BE PERMITTED TO WASH OUT OR DISCHARGE SURPLUS CONCRETE OR DRUM WASH WATER ON SITE. SPECIFIC AREAS FOR THIS ACTIVITY SHALL BE DESIGNATED BY THE CONTRACTOR AND PROVIDED WITH ADEQUATE SILTATION BASINS AND OTHER FACILITIES TO ASSURE THAT DISCHARGE IS CONTAINED AND CLEANSED BEFORE ENTERING THE RECEIVING STORM SEWER SYSTEM.
9. ALL ADJACENT STREETS SHOULD BE KEPT CLEAR OF MUD/DEBRIS. THE CONTRACTOR SHALL INSPECT THE STREETS DAILY AND CLEAN THEM AS NECESSARY.
10. A TEMPORARY CHAINLINK CONSTRUCTION FENCE AND GATE ARE SHOWN AT THE PROPOSED CONSTRUCTION ENTRANCE. THE FENCE WILL BE REMOVED AND REPLACED AS REQUIRED TO ALLOW FOR UTILITY INSTALLATIONS, ROADWAY WORK, ETC. DURING WORKING HOURS BUT SHALL BE REINSTALLED AT THE END OF EACH DAY TO PROVIDE A SECURE CONSTRUCTION SITE.
11. THE EXISTING B–BOX SHALL BE REMOVED. SHUT OFF SERVICE AT THE MAIN AND ABANDON PER CITY REQUIREMENTS.
12. EXISTING SEPTIC SYSTEM/SEPTIC FIELD (NOT SHOWN) SHALL BE ABANDONED IN ACCORDANCE WITH DUPAGE COUNTY HEALTH DEPARTMENT REGULATIONS WITH DOCUMENTATION PROVIDED TO THE CITY OF NAPERVILLE.
13. FOR COMPLETE SPECIFICATIONS FOR SEDIMENT CONTROL AND SITE RESTORATION MEASURES, SEE SHEET 3.

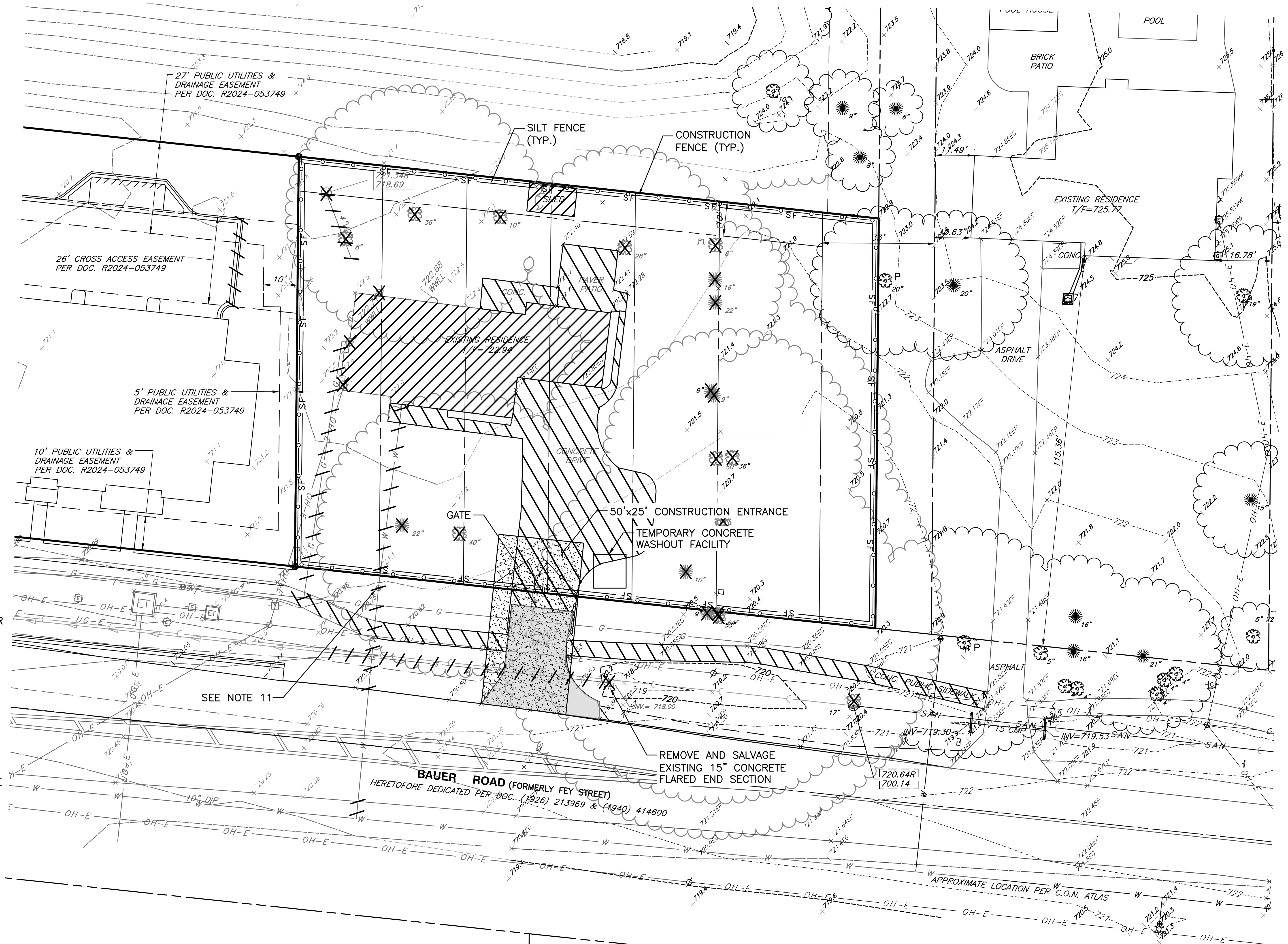

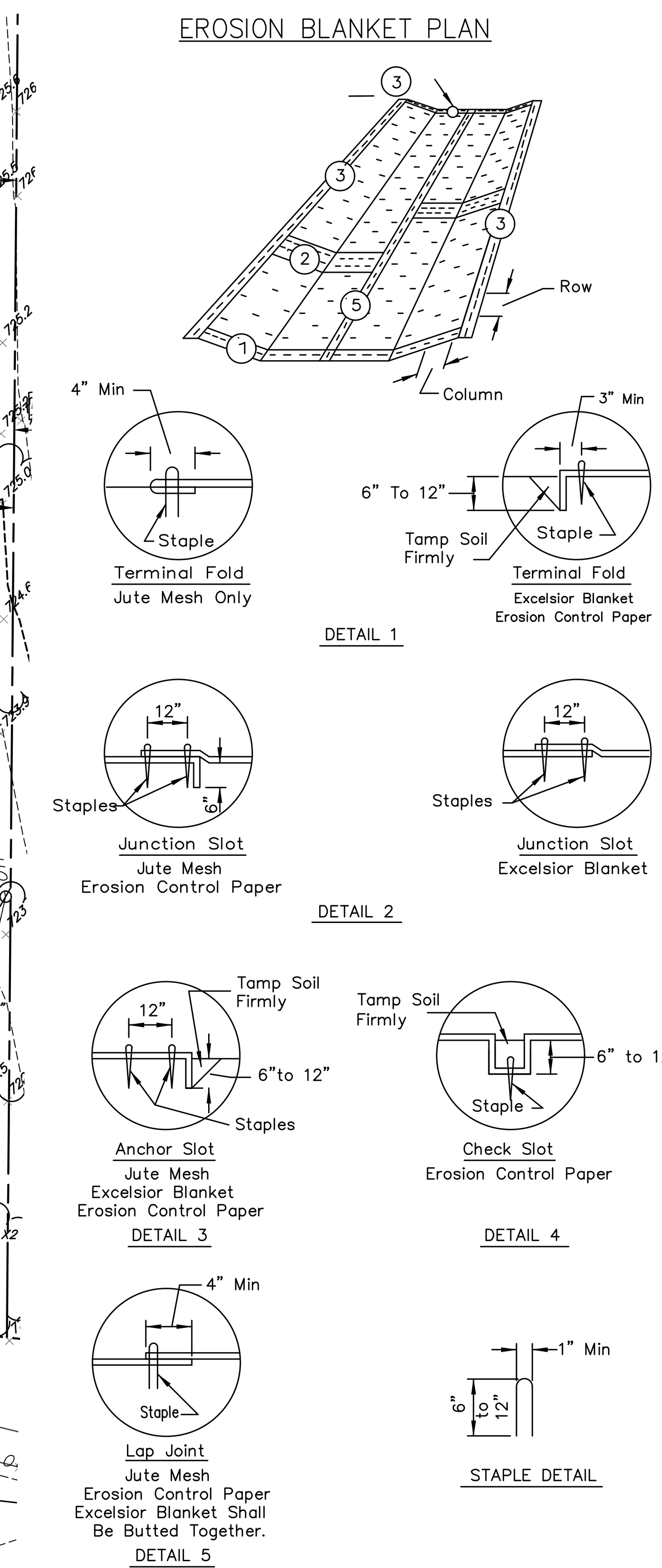

NOTES:
1. On erosion control paper, check slots, in ditch channel shall be spaced so that one occurs within each 50' on slopes of more than 4% and less than 6%. On slopes of 6% or more, they shall be spaced so that one occurs within each 25'.
2. Staples are to be placed alternately, in columns approximately 2' apart and in rows approximately 3' apart. Approximately 175 staples are required per 4'x 225' roll of material and 125 staples are required per 4'x 150' roll of material.
3. Erosion control material shall be placed loosely over ground surface. Do not stretch.
4. All terminal ends and transverse laps shall be stapled at approximately 12" intervals.

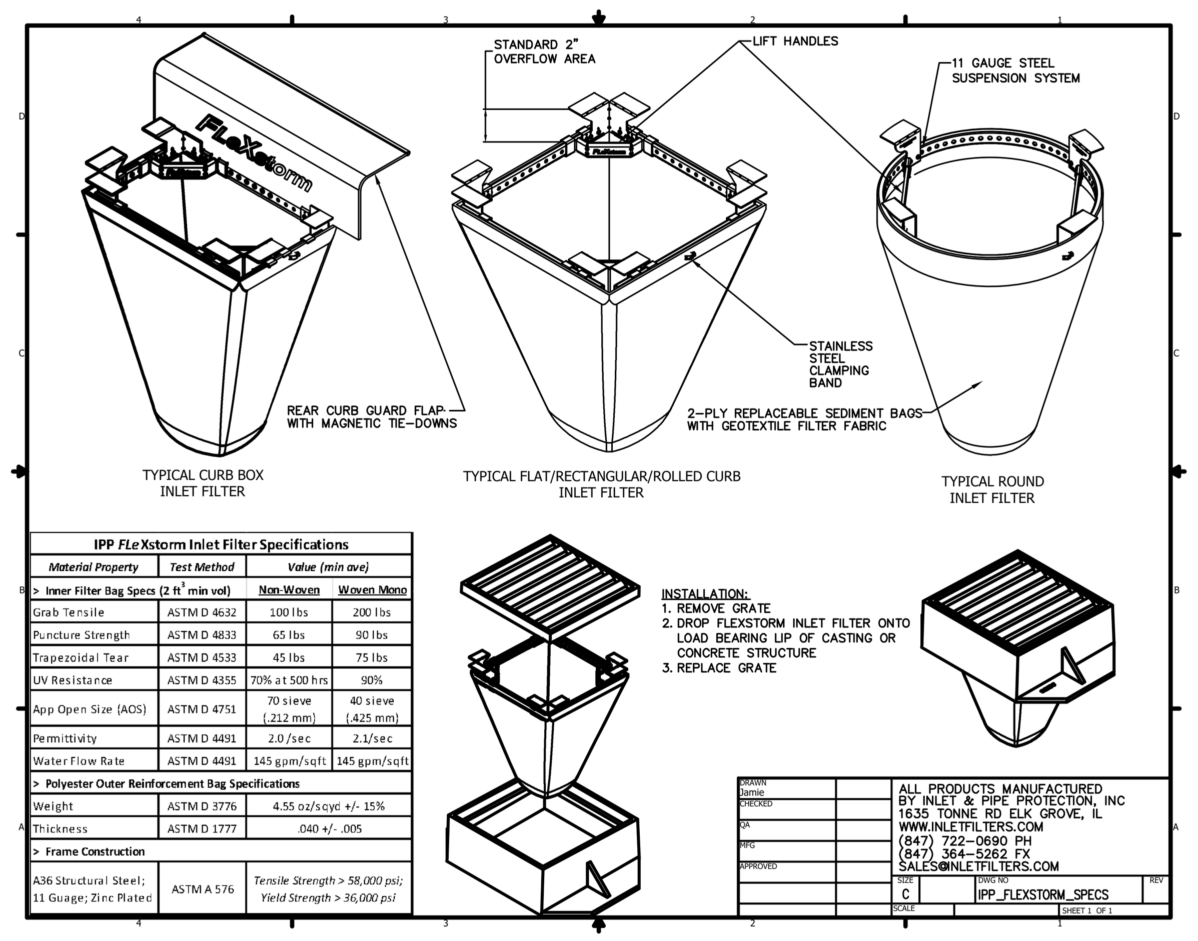

IPP FLeXstorm Inlet Filter Specifications

Material Property	Test Method	Value (min ave)	
> Inner Filter Bag Specs (2 ft³ min vol)		Non-Woven	Woven Mono
Grab Tensile	ASTM D 4632	100 lbs	200 lbs
Puncture Strength	ASTM D 4833	65 lbs	90 lbs
Trapezoidal Tear	ASTM D 4533	45 lbs	75 lbs
UV Resistance	ASTM D 4355	70% at 500 hrs	90%
App Open Size (AOS)	ASTM D 4751	70 sieve (.212 mm)	40 sieve (.425 mm)
Permittivity	ASTM D 4491	2.0 /sec	2.1/sec
Water Flow Rate	ASTM D 4491	145 gpm/sqft	145 gpm/sqft
> Polyester Outer Reinforcement Bag Specifications			
Weight	ASTM D 3776	4.55 oz/sqyd +/- 15%	
Thickness	ASTM D 1777	.040 +/- .005	
> Frame Construction			
A36 Structural Steel; 11 Guage; Zinc Plated	ASTM A 576	Tensile Strength > 58,000 psi; Yield Strength > 36,000 psi	

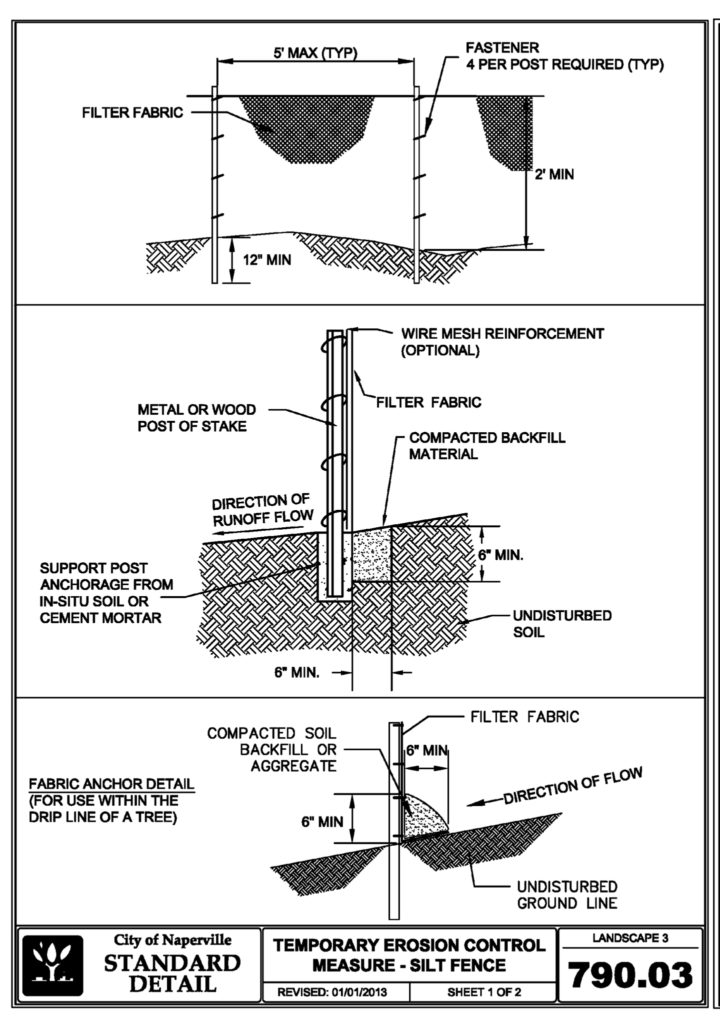

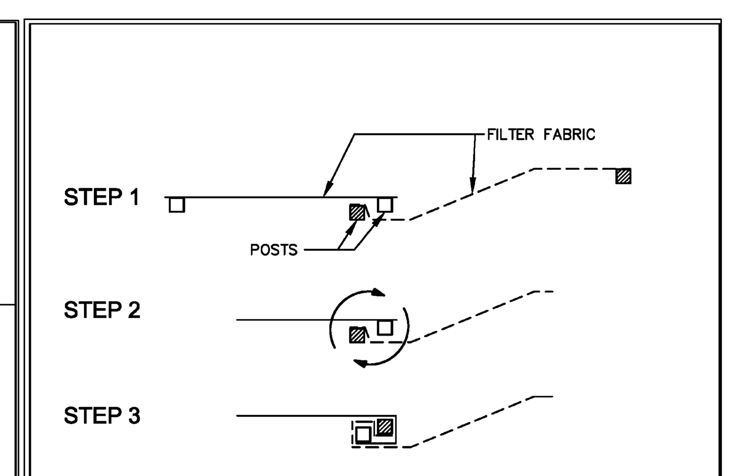

STEPS FOR THE ATTACHMENT OF TWO SILT FENCES:
1. PLACE THE END POST OF THE SECOND FENCE INSIDE THE END POST OF THE FIRST FENCE.
2. ROTATE BOTH POSTS AT LEAST 180 DEGREESIN A CLOCKWISE DIRECTION TO CREATE A TIGHT SEAL WITH THE FABRIC MATERIAL.
3. DRIVE BOTH POSTS A MINIMUM OF 18 INCHES INTO THE GROUND AND BURY THE FLAP.

NOTES:
1. TEMPORARY SILT FENCE SHALL BE INSTALLED PRIOR TO ANY GRADING WORK IN THE AREA TO BE PROTECTED. THEY SHALL BE MAINTAINED THROUGHOUT THE CONSTRUCTION PERIOD AND REMOVED IN CONJUNCTION WITH THE FINAL GRADING AND SITE STABILIZATION.
2. FILTER FABRIC SHALL MEET THE REQUIREMENTS OF MATERIAL SPECIFICATION 592 GEOTEXTILE TABLE 1 OR 2, CLASS I WITH EQUIVALENT OPENING SIZE OF AT LEAST 30 FOR NON-WOVEN OR 50 FOR WOVEN.
3. FENCE POSTS SHALL BE EITHER STANDARD STEEL POST OR WOOD POST WITH A MINIMUM CROSS-SECTIONAL AREA OF 3.0 SQ. IN.
4. DEPENDING UPON THE CONFIGURATION, ATTACH FABRIC AND WIRE MESH WITH HOG RINGS, STEEL POST WITH TIE WIRES, WOOD POST WITH NAILS.

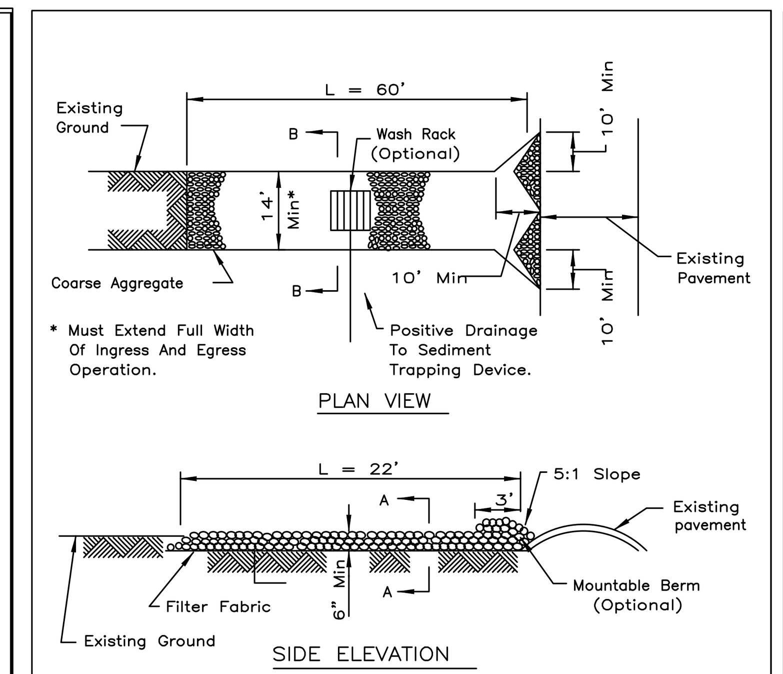

NOTES:
1. Filter fabric shall meet the requirements of material specification 592 GEOTEXTILE, Table I or 2, Class I, II or IV and shall be placed over the cleared area prior to the placing of rock.
2. Rock or reclaimed concrete shall meet one of the following IDOT coarse aggregate gradation, CA–1, CA–2, CA–3 or CA–4 and be placed according to construction specification 25 ROCKFILL using placement Method 1 and Class III compaction.
3. Any drainage facilities required because of washing shall be constructed according to manufacturers specifications.
4. If wash racks are used they shall be installed according to the manufacturer's specifications.

STABILIZED CONSTRUCTION ENTRANCE PLAN

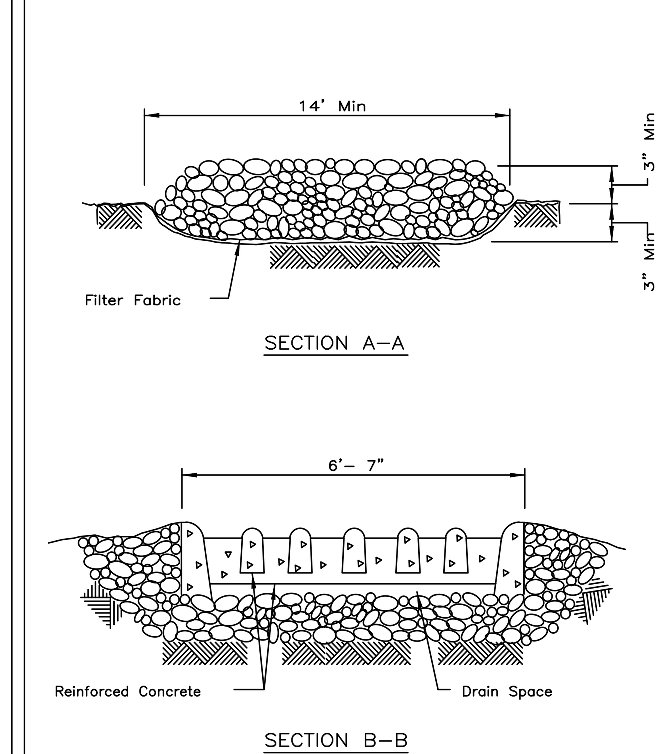

TEMPORARY CONCRETE WASHOUT FACILITY

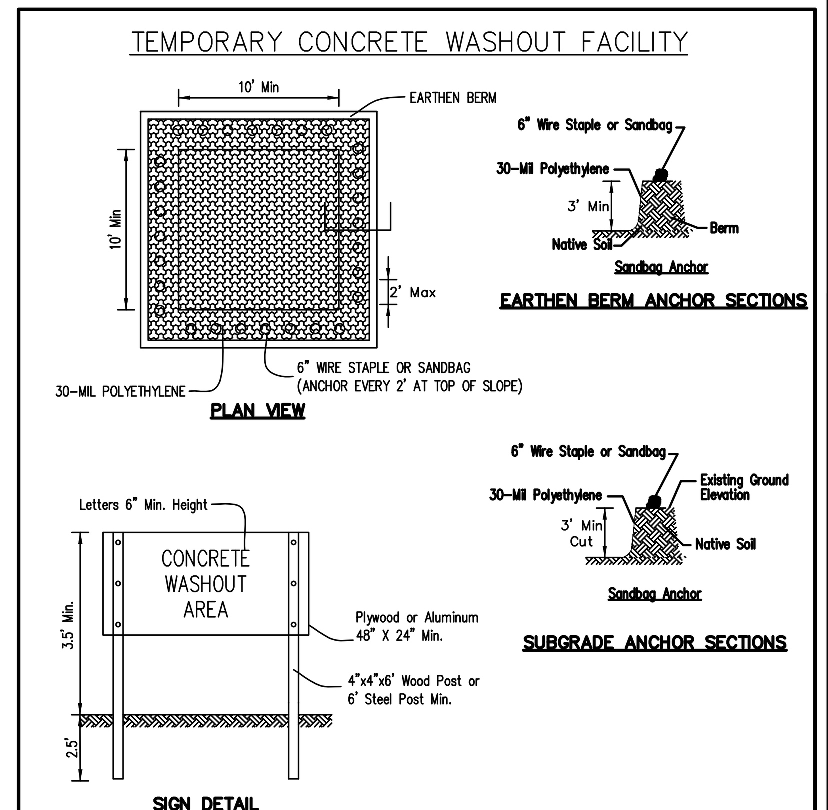

NOTES:
1. Maintaining temporary concrete washout facilities shall include removing and disposing of hardened concrete and/or slurry and returning the facilities to a functional condition.
2. Facility shall be cleaned or reconstructed in a new area once washout becomes two–thirds full.

REFERENCE

1. EXISTING CONDITIONS ARE BASED UPON FIELD OBSERVATIONS MADE ON AUGUST 21, 2025 BY CIVIL & ENVIRONMENTAL CONSULTANTS, INC.
1. FIELD DATUM: ILLINOIS STATE PLANE NSRS 2011, EAST ZONE– US SURVEY FOOT CITY OF NAPERVILLE DATUM NAVD 88.
2. UNDERGROUND UTILITY INFORMATION SHOWN HEREON IS BASED UPON FIELD OBSERVATIONS, ATLAS MAPS PROVIDED BY THE CITY OF NAPERVILLE AND THOSE PUBLIC UTILITY COMPANIES OPERATING UNDER FRANCHISE OR CONTRACT WITH THE CITY OF NAPERVILLE.

SCALE IN FEET 0 20 40

REVISION RECORD

NO	DATE	DESCRIPTION
1	01/19/2026	REVISED PER CITY OF NAPERVILLE REVIEW COMMENTS DATED 12/12/2025
2	03/17/2026	NO REVISIONS THIS SHEET
3	04/27/2026	NO REVISIONS THIS SHEET

ENGINEERING, SURVEYING AND LANDSCAPE ARCHITECTURE IN THE STATE OF NORTH CAROLINA WILL BE PROVIDED BY CEC SURVEYING AND LANDSCAPE ARCHITECTS OF NC, PLLC. SERVICES IN PUERTO RICO WILL BE PROVIDED BY CEC ENGINEERS & CONSULTANTS, LLC. LANDSCAPE ARCHITECTURE SERVICES IN THE STATE OF OHIO WILL BE PROVIDED BY CEC LANDSCAPE ARCHITECTS, LLC.

Civil & Environmental Consultants, Inc.
1230 East Diehl Road
Suite 200
Naperville, IL 60563
Ph: 630.963.6026
www.cecinc.com

REDSTART CONSTRUCTION, INC.
BAUER ROAD DUPLEXES
27W240 BAUER ROAD
NAPERVILLE, ILLINOIS 60563

DEMOLITION AND STORMWATER POLLUTION & PREVENTION PLAN

DATE:	OCTOBER 21, 2025	DRAWN BY:	ET
DWG SCALE:	1" = 20'	CHECKED BY:	MAJ
PROJECT NO:	347-703		
APPROVED BY:	*JGC		

DRAWING NO.: **C101**

SHEET 6 OF 12

P:\340-000\347-703\-CADD\Dwg\CV01-FINAL ENGINEERING\347703-CV01-C101.dwg{C101} LS:(4/27/2026 - etrebicka) - LP: 4/27/2026 12:32 PM

EXHIBIT E

N NORTH

SCALE IN FEET

0 20 40

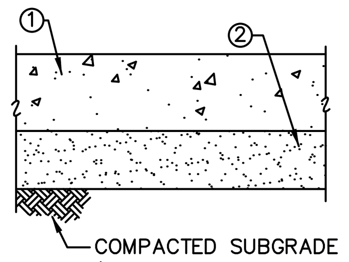

COMPACTED SUBGRADE
(95% MODIFIED PROCTOR DENSITY)

SIDEWALK

4" PORTLAND CEMENT CONCRETE, CLASS SI (BAUER ROAD)
5" PORTLAND CEMENT CONCRETE, CLASS SI (PRIVATE)
2" COMPACTED CA-6 AGGREGATE BASE COURSE (BAUER ROAD)
4" COMPACTED CA-6 AGGREGATE BASE COURSE (PRIVATE)

CONCRETE PAVEMENT
(NTS)

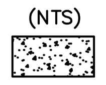

1 1/2" HOT MIX ASPHALT SURFACE COURSE, IL-9.5
(0.40 X 1.5 = 0.60)
2 1/4" (MINIMUM) HOT MIX ASPHALT BINDER COURSE IL-19.0
(0.33 X 2.25 = 0.74)
PRIME AGGREGATE @ 0.25 GAL/SY
10" AGGREGATE BASE COURSE TYPE B (CA-6)
(0.13 X 10 = 1.30)
COMPACTED SUBGRADE (95% STANDARD PROCTOR DENSITY)

STRUCTURAL NUMBER = 0.60 + 0.74 + 1.30 = 2.64

ASPHALT PAVEMENT (PRIVATE ROAD)
(NTS)

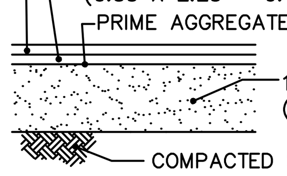

2" HOT MIX ASPHALT SURFACE COURSE, IL-9.5
(0.40 X 2 = 0.80)
5" (2 LIFTS) HOT MIX ASPHALT BINDER COURSE IL-19.0
(0.33 X 5 = 1.65)
PRIME AGGREGATE @ 0.25 GAL/SY
12" AGGREGATE BASE COURSE TYPE B (CA-6)
(0.13 X 12 = 1.56)
COMPACTED SUBGRADE (95% STANDARD PROCTOR DENSITY)

STRUCTURAL NUMBER = 0.80 + 1.65 + 1.56 = 4.01

ASPHALT PAVEMENT (BAUER ROAD)
(NTS)

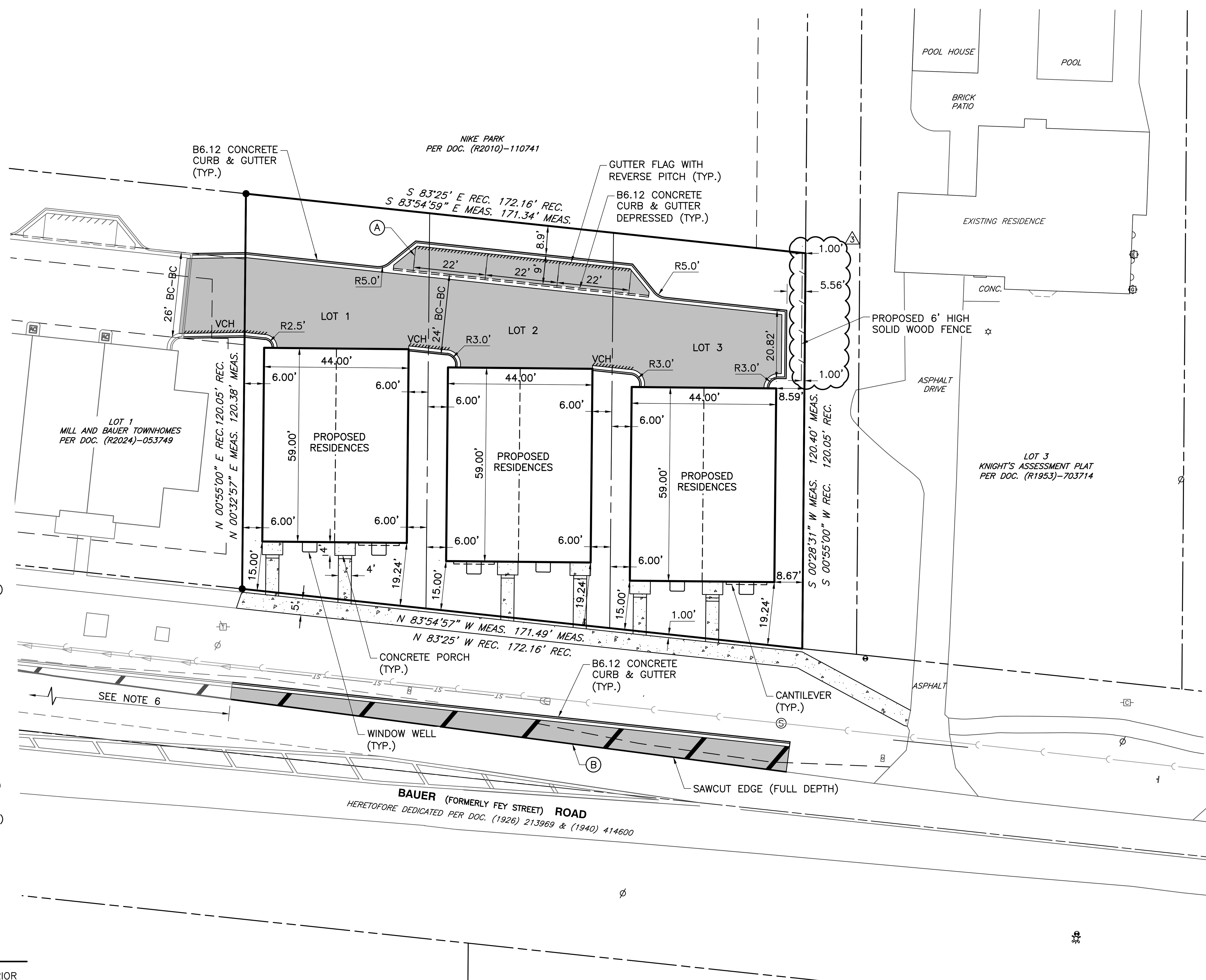

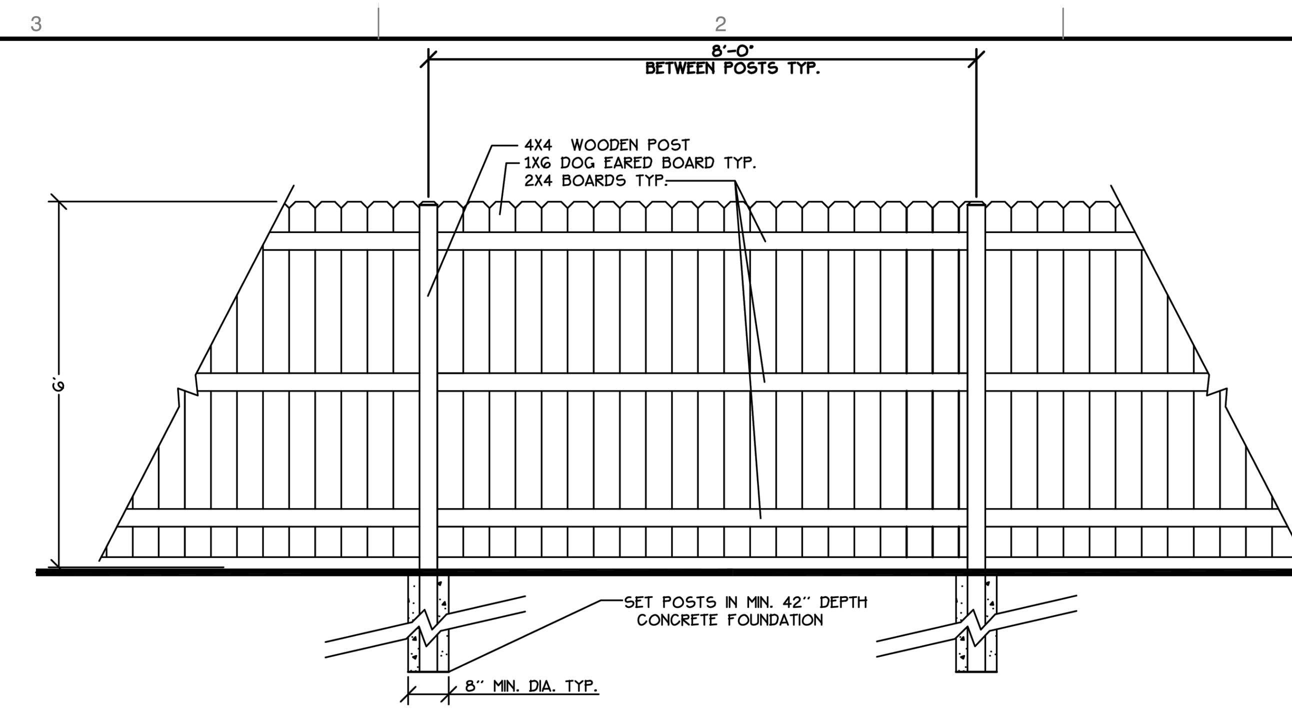

6' HIGH SOLID WOOD FENCE DETAIL
N.T.S.

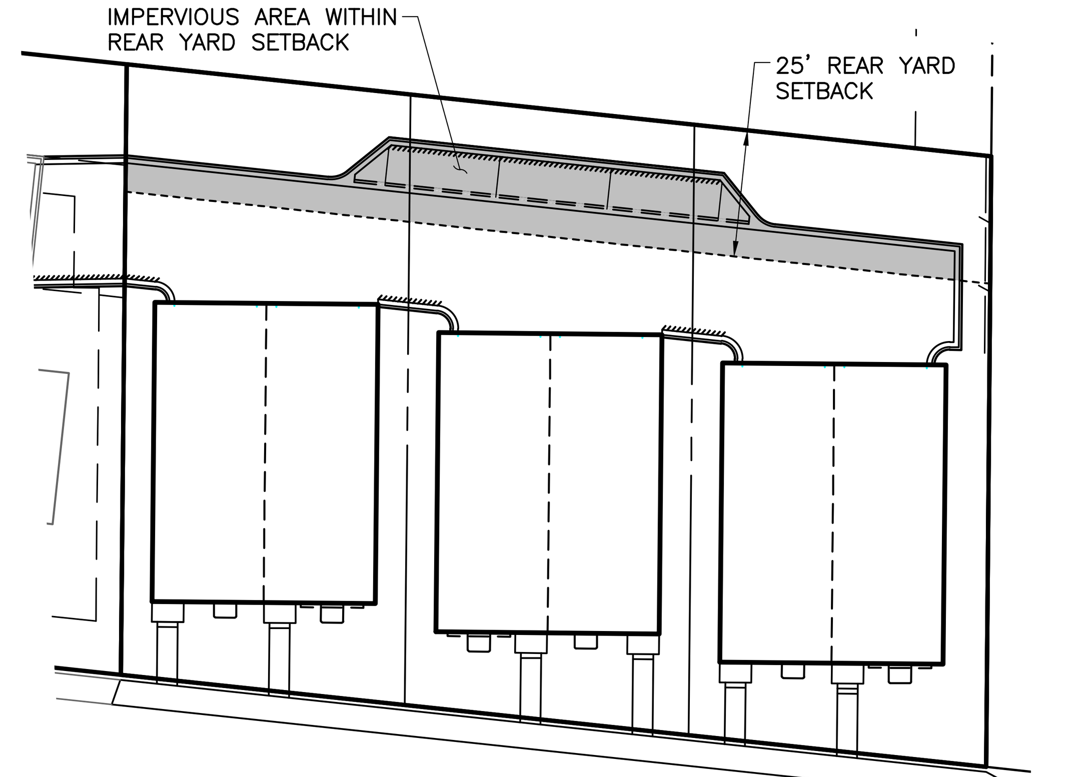

REAR YARD SETBACK COVERAGE
SCALE 1" = 30'

REAR YARD COVERAGE NOTE:

TOTAL REAR YARD AREA:	4,284 SQ. FT.
IMPERVIOUS AREA WITHIN REAR YARD SETBACK :	1,864 SQ. FT.
TOTAL PERCENTAGE COVERED:	43.5%

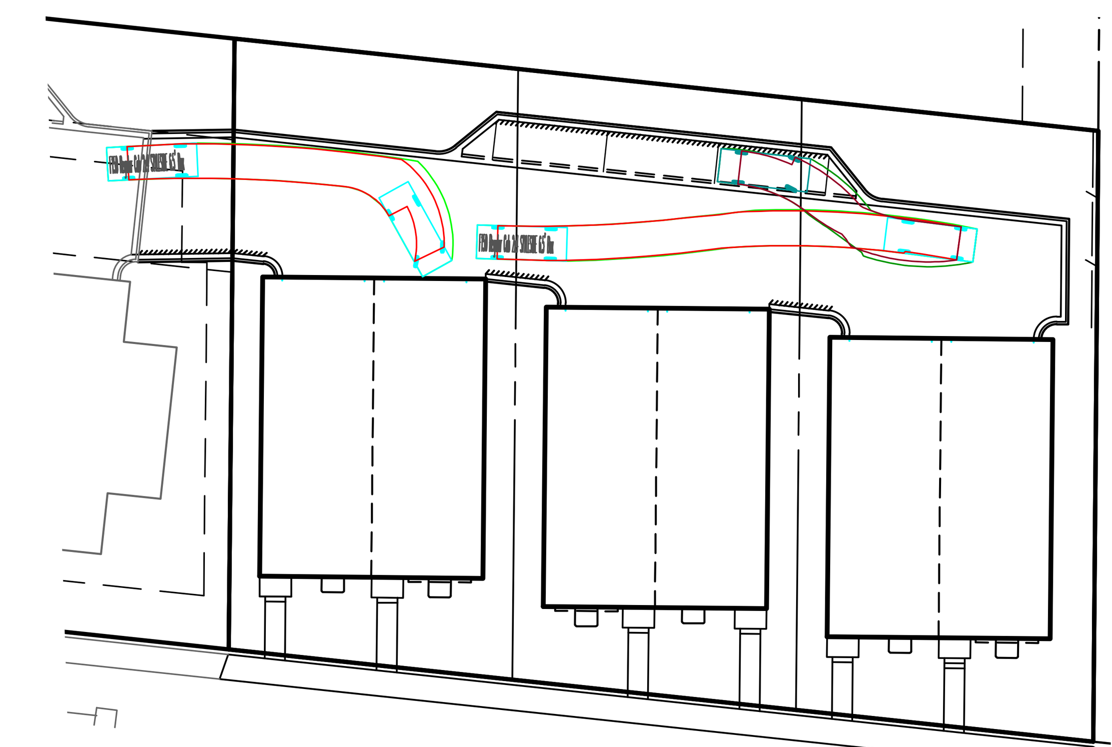

AUTOTURN EXHIBIT – GARAGE AND PARALLEL PARKING
SCALE 1" = 30'

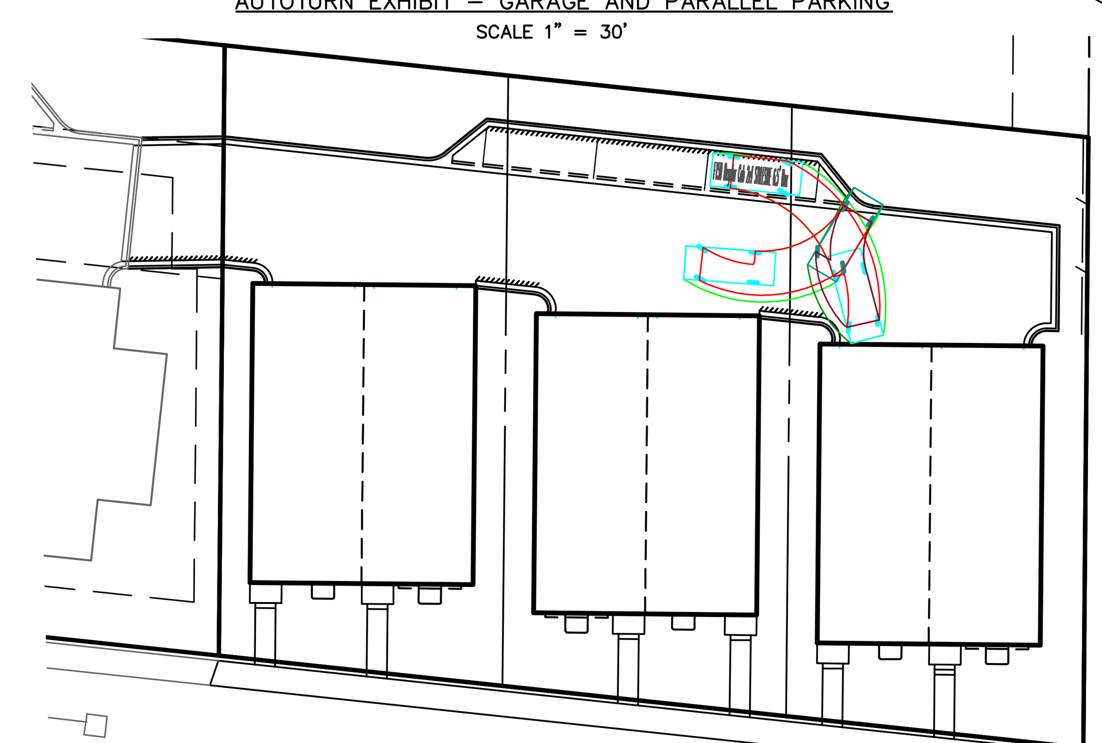

AUTOTURN EXHIBIT – THREE-POINT TURN
SCALE 1" = 30'

YARD REQUIREMENTS NOTES

1. SECTION 6-2-3:3.1: IN ALL REQUIRED YARDS, EXCEPT INTERIOR SIDE YARDS, THE ORDINARY PROJECTION OF SILLS, BELT COURSES, CORNICES, CANTILEVERED BAY WINDOWS, BUTTRESSES, CHIMNEYS, ORNAMENTAL FEATURES, AND EAVES MAY EXTEND THREE (3) FEET INTO THE REQUIRED YARD EXCEPT AS PROVIDED IN SUBSECTION 6-2-3.3.1.1. IN ALL REQUIRED INTERIOR SIDE YARDS, THE ORDINARY PROJECTION OF SILLS, BELT COURSES, CORNICES, CHIMNEYS, AND EAVES MAY EXTEND THREE (3) FEET INTO THE REQUIRED SIDE YARD AND CANTILEVERED BAY WINDOWS MAY EXTEND ONE FOOT INTO THE REQUIRED SIDE YARD. STEPS OR SIDEWALKS WHICH PROVIDE ACCESS TO A BUILDING OR STRUCTURE OR ACCESS TO A LOT FROM A STREET OR ALLEY MAY BE LOCATED IN ANY REQUIRED YARD.
2. SECTION 3.1.1.NO OBSTRUCTION PERMITTED BY THIS SUBSECTION 6-2-3.3 SHALL BE INSTALLED SO THAT ANY PORTION IS ABOVE, ACROSS, UNDER OR OVER A FIVE-FOOT INTERIOR SIDE YARD DRAINAGE OR UTILITY EASEMENT FROM GROUND LEVEL TO THE SKY.
3. SECTION 3.1.2.CANTILEVERED BAY WINDOWS AS PERMITTED IN THIS SECTION SHALL INCLUDE PROJECTING WINDOWS WITH ANY NUMBER OF SIDES, PROVIDED THAT (A) FOR EACH STORY OF EACH BUILDING ELEVATION, THE TOTAL COMBINED WIDTH OF ALL CANTILEVERED BAY WINDOWS SHALL NOT EXCEED THIRTY PERCENT (30%) OF THAT ELEVATION'S FACADE LENGTH; AND (B) THE PREDOMINANT MATERIAL OF THE CANTILEVERED BAY WINDOW IS WINDOW GLASS.

REFERENCE

1. EXISTING CONDITIONS ARE BASED UPON FIELD OBSERVATIONS MADE ON AUGUST 21, 2025 BY CIVIL & ENVIRONMENTAL CONSULTANTS, INC.
1. FIELD DATUM: ILLINOIS STATE PLANE NSRS 2011, EAST ZONE- US SURVEY FOOT CITY OF NAPERVILLE DATUM NAVD 88.
2. UNDERGROUND UTILITY INFORMATION SHOWN HEREON IS BASED UPON FIELD OBSERVATIONS, ATLAS MAPS PROVIDED BY THE CITY OF NAPERVILLE AND THOSE PUBLIC UTILITY COMPANIES OPERATING UNDER FRANCHISE OR CONTRACT WITH THE CITY OF NAPERVILLE.

DIMENSION NOTES

1. UNLESS OTHERWISE NOTED, ALL DIMENSIONS ARE TO THE BACK OF CURB, FACE OF BUILDING, EDGE OF SIDEWALK OR PROPERTY LINE.
2. FOR PROPOSED BUILDING DIMENSIONS SEE ARCHITECTURAL PLANS.
3. ALL PAVEMENT MARKINGS SHALL BE THERMOPLASTIC AND SHALL BE AS FOLLOWS:
   - (A) PARKING SPACES – 4" SOLID YELLOW
   - (B) EDGELINE – 4" SOLID, WHITE WITH 12" SOLID WHITE (20' C-C) AT 45°
4. 'VCH' INDICATES B6.12 CONCRETE CURB AND GUTTER WITH VARIABLE CURB HEIGHT. THE CONTRACTOR SHALL REVIEW THE PROPOSED GRADING PLAN AND TAKE NOTE WHERE PROPOSED CURB VARIES IN HEIGHT.
5. TRASH/RECYCLE CONTAINERS SHALL BE PLACED ADJACENT TO THE GARAGE DOOR SOUTH OF THE 24' DRIVE AISLE. THE TRASH/RECYCLE CONTAINERS SHALL NOT BE PLACED IN GRASS AREA ON THE NORTH SIDE OF THE DRIVE AISLE.
6. SCRUB EXISTING 12" SOLID WHITE LINES AT 45° AND RESTRIPE AS SHOWN.

SITE DATA

GROSS BOUNDARY AREA	= 20,540 SQUARE FEET (0.472 ACRES)	
NUMBER OF LOTS	= 3	
CURRENT ZONING	= R3 (SINGLE-FAMILY RESIDENCE DISTRICT, DUPAGE COUNTY)	
PROPOSED ZONING	= TU (TRANSITIONAL USE DISTRICT)	
PROPOSED SETBACKS:	REQUIRED (TU)	PROPOSED
FRONT YARD (SOUTH)	= 15 FEET	15 AND VARIES TO 19.24 FEET
INTERIOR SIDE YARD (EAST & WEST)	= 6 FEET	6, 8.59 AND 8.67 FEET
REAR YARD (NORTH)	= 25 FEET	41.86 AND VARIES TO 46.10 FEET
BUILDING AREA:	= 7,788 SQUARE FEET	
NUMBER OF RESIDENTIAL UNITS:	= 6	
PARKING PROVIDED:		
6 UNITS x 2 SPACES/UNIT (IN GARAGE)	= 12 SPACES	
VISITOR	= 3 SPACES	
TOTAL	= 15 SPACES	

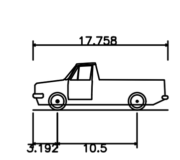

F150 Regular Cab 2x4 STYLESIDE 6.5' Box	
Overall Length	17.758ft
Overall Width	6.575ft
Overall Body Height	6.217ft
Min Body Ground Clearance	0.717ft
Track Width	6.575ft
Lock-to-lock time	4.00s
Curb to Curb Turning Radius	20.850ft

DESIGN VEHICLE DETAILS
NOT TO SCALE

REVISION RECORD

NO	DATE	DESCRIPTION
1	01/16/2026	REVISED PER CITY OF NAPERVILLE REVIEW COMMENTS DATED 12/12/2025
2	03/17/2026	REVISED PER CITY OF NAPERVILLE REVIEW COMMENTS DATED 02/06/2026
3	04/27/2026	REVISED PER CITY OF NAPERVILLE REVIEW COMMENTS DATED 04/15/2026

CEC
Civil & Environmental Consultants, Inc.
1230 East Diehl Road
Suite 200
Naperville, IL 60563
Ph: 630.963.6026
www.cecinc.com

REDSTART CONSTRUCTION, INC.
BAUER ROAD DUPLEXES
27W240 BAUER ROAD
NAPERVILLE, ILLINOIS 60563

DIMENSIONS PLAN

DATE:	OCTOBER 21, 2025	DRAWN BY:	ET
DWG SCALE:	1" = 20'	CHECKED BY:	MAJ
PROJECT NO:	347-703	APPROVED BY:	*JGC

DRAWING NO.:
C200
SHEET 7 OF 12

EXHIBIT E

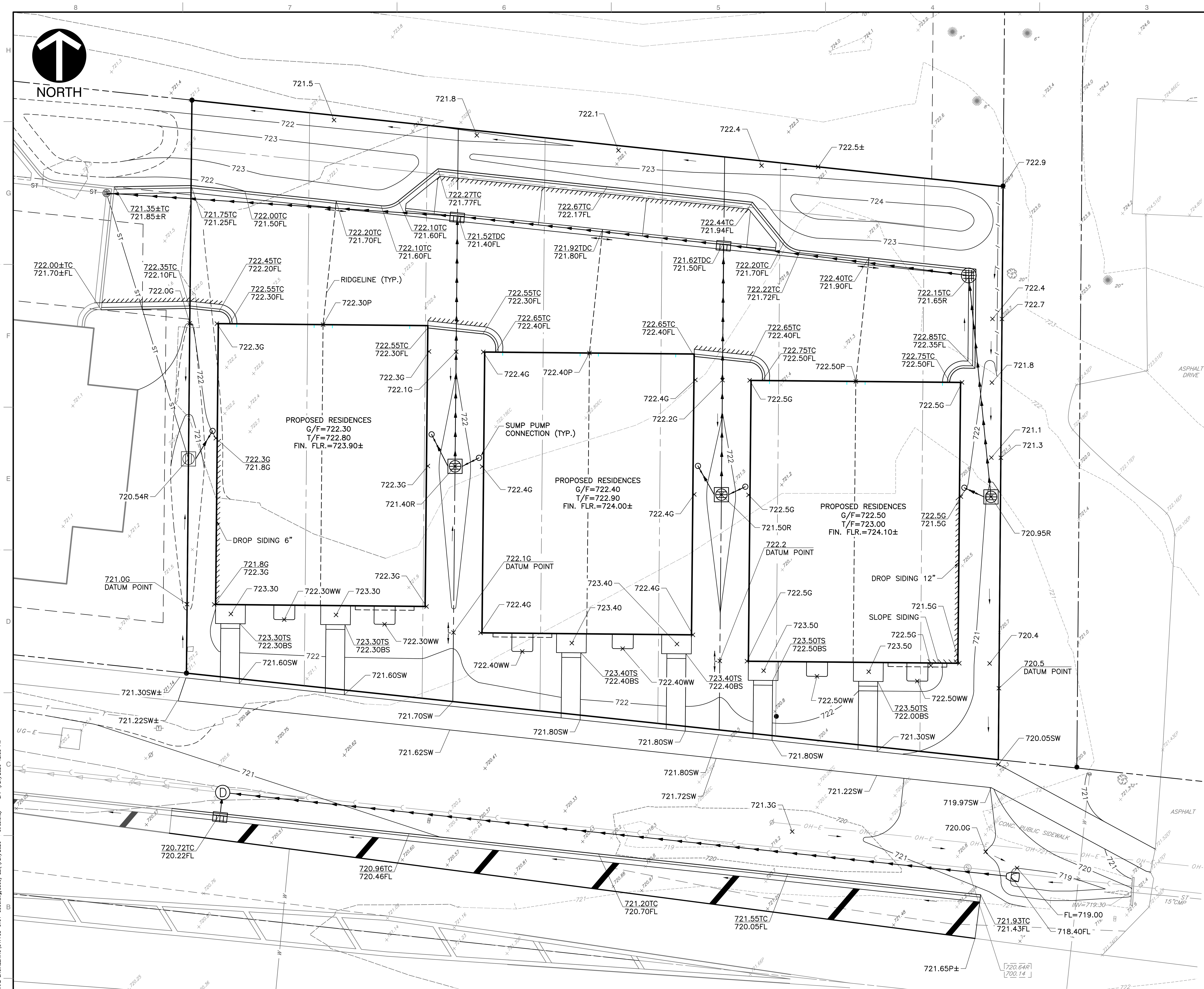

EXISTING PERVIOUS/IMPERVIOUS CONDITIONS
1"=60'

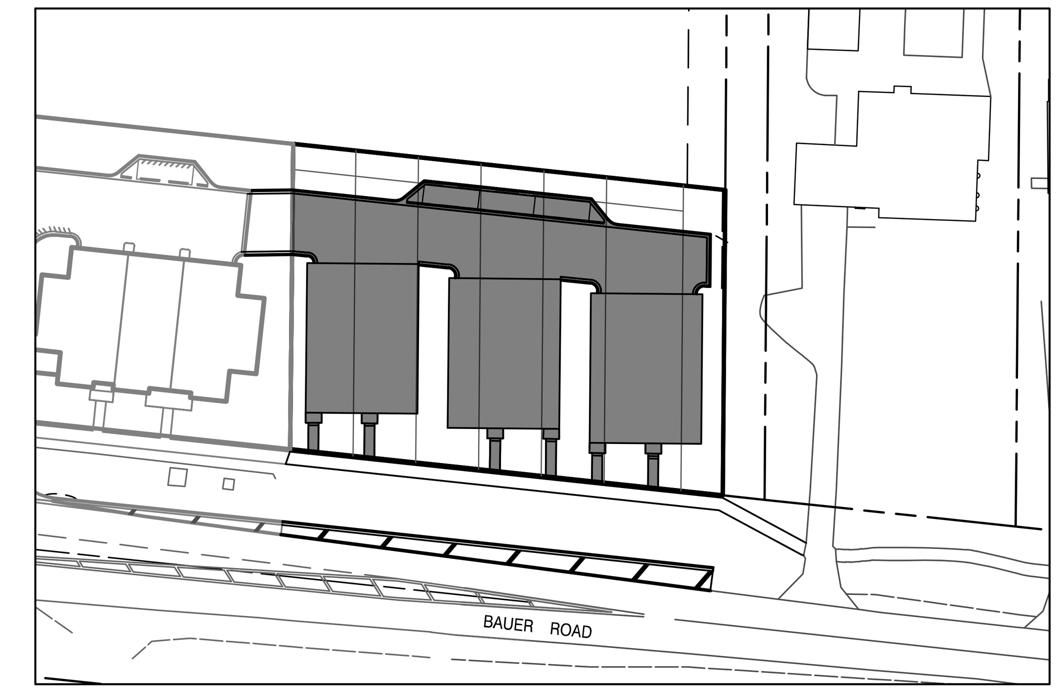

PROPOSED PERVIOUS/IMPERVIOUS CONDITIONS
1"=60'

PERVIOUS/IMPERVIOUS CALCULATIONS			
	IMPERVIOUS AREA	PERVIOUS AREA	PROJECT AREA
EXISTING	4,788 S.F.	15,752 S.F.	20,540 S.F.
PROPOSED	13,178 S.F.	7,362 S.F.	
NET INCREASE.	8,390 S.F.		

DUE TO GROUNDWATER PROHIBITION FOR THE SURROUNDING PROPERTIES, A FEE IN LIEU WILL BE PROVIDED INSTEAD OF A POST CONSTRUCTION BEST MANAGEMENT PRACTICE.

GRADING NOTES:

1. UNLESS OTHERWISE INDICATED, ALL VEGETATIVE AND STRUCTURAL EROSION AND SEDIMENT CONTROL PRACTICES WILL BE CONSTRUCTED ACCORDING TO MINIMUM STANDARDS AND SPECIFICATION IN THE ILLINOIS URBAN MANUAL, LATEST EDITION.
2. ALL GRADES DEPICTED ARE FINISHED GRADES. IN NON-PAVED AREAS, THE CONTRACTOR SHALL SUBTRACT 6 INCHES (0.5 FEET) TO ALLOW FOR TOPSOIL/MULCH MATERIAL PLACEMENT. THE FINISHED TOPSOIL ELEVATION AT THE FOUNDATION SHOULD GENERALLY BE SIX (6) INCHES BELOW THE FINISHED FLOOR ELEVATION.
3. PROPOSED SIDEWALK SHALL HAVE CROSS SLOPE OF 1% MINIMUM AND 2% MAXIMUM.
4. DRAINAGE SWALES HAVE BEEN DESIGNED WITH A 2% MINIMUM LONGITUDINAL SLOPE.
5. ALL SUMP PUMP DISCHARGE SHALL BE CONNECTED TO THE PROPOSED STORM SEWER SYSTEM.
6. THE CONTRACTOR SHALL REVIEW THE PROPOSED GRADING PLAN AND TAKE NOTE WHERE PROPOSED CURB VARIES IN HEIGHT.

REFERENCE

1. EXISTING CONDITIONS ARE BASED UPON FIELD OBSERVATIONS MADE ON AUGUST 21, 2025 BY CIVIL & ENVIRONMENTAL CONSULTANTS, INC.
1. FIELD DATUM: ILLINOIS STATE PLANE NSRS 2011, EAST ZONE- US SURVEY FOOT CITY OF NAPERVILLE DATUM NAVD 88.
2. UNDERGROUND UTILITY INFORMATION SHOWN HEREON IS BASED UPON FIELD OBSERVATIONS, ATLAS MAPS PROVIDED BY THE CITY OF NAPERVILLE AND THOSE PUBLIC UTILITY COMPANIES OPERATING UNDER FRANCHISE OR CONTRACT WITH THE CITY OF NAPERVILLE.

SCALE IN FEET
0 10 20

REVISION RECORD

NO.	DATE	DESCRIPTION
1	01/19/2026	REVISED PER CITY OF NAPERVILLE REVIEW COMMENTS DATED 12/12/2025
2	04/17/2026	NO REVISIONS THIS SHEET
3	04/27/2026	NO REVISIONS THIS SHEET

ENGINEERING, SURVEYING AND LANDSCAPE ARCHITECTURE IN THE STATE OF NORTH CAROLINA WILL BE PROVIDED BY CEC OF NORTH CAROLINA, INC. SERVICES IN PUERTO RICO WILL BE PROVIDED BY CEC ENGINEERING AND LANDSCAPE ARCHITECTS OF NC, PLLC. SURVEYING, LANDSCAPE ARCHITECTURE SERVICES IN THE STATE OF OHIO WILL BE PROVIDED BY CEC LANDSCAPE ARCHITECTS, LLC.

1230 East Diehl Road
Suite 200
Naperville, IL 60563
Ph: 630.963.6026
www.cecinc.com

Civil & Environmental Consultants, Inc.

REDSTART CONSTRUCTION, INC.
BAUER ROAD DUPLEXES
27W240 BAUER ROAD
NAPERVILLE, ILLINOIS 60563

GRADING PLAN

DATE:	OCTOBER 21, 2025	DRAWN BY:	ET
DWG SCALE:	1" = 10'	CHECKED BY:	MAJ
PROJECT NO:			347-703
APPROVED BY:			*JGC

DRAWING NO.:
C300
SHEET 8 OF 12

EXHIBIT E

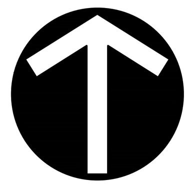

UTILITY NOTES:

1. THE PROPOSED SANITARY SEWER SERVICES SHALL BE 6-INCH DIAMETER, PVC SDR 26 ASTM D2241 @ 2.00% MINIMUM. THE SERVICE SHALL BE INSTALLED WITH A MINIMUM DEPTH OF COVER OF 5 FEET AND SHALL INCLUDE A CLEAN OUT AND RISER INTO THE EXISTING 8-INCH SANITARY SEWER. THE SERVICES SHALL BE INSTALLED BELOW ALL EXISTING UTILITIES TO AVOID POTENTIAL CONFLICT. THE CONTRACTOR SHALL NOTE THAT THE EXISTING SANITARY SEWER IS 20± FEET DEEP AND THAT THE EXISTING 15-INCH STORM SEWER WILL BE REMOVED AND REPLACED TO FACILITATE THE RISER CONNECTION. EACH DUPLEX UNIT SHALL INCLUDE AN OVERHEAD SANITARY SEWER AND EJECTOR PIT. CONNECTION TO THE EXISTING SANITARY SEWER SHALL BE DONE WITH A CORE AND SERVICE SADDLE, INSERT A TEE, OR BY CUTTING IN A TEE OR WYE.
2. THE PROPOSED WATER SERVICE SHALL BE 1 1/2 INCH DIAMETER, TYPE "K" COPPER WITH B.BOX AND CORPORATION STOP IN ACCORDANCE WITH CITY REQUIREMENTS. THE SERVICES SHALL BE INSTALLED WITH A MINIMUM DEPTH OF COVER OF 5 FEET AND SHALL BE INSTALLED BELOW THE PROPOSED 15-INCH STORM SEWER (18-INCH MINIMUM VERTICAL SEPARATION), BELOW EXISTING GAS MAIN, AND ABOVE THE EXISTING 24-INCH SANITARY SEWER TO AVOID POTENTIAL CONFLICT. THE SERVICES SHALL BE PUSHED BENEATH BAUER ROAD WITH A 5 FOOT CLEARANCE NORTH AND SOUTH OF THE EXISTING EDGE OF PAVEMENT. THE CONTRACTOR SHALL VERIFY THE LOCATION OF EXISTING WATERMAIN TO INSURE AMPLE ROOM TO MAKE THE CONNECTION WITHOUT PAVEMENT REMOVAL. EXCAVATIONS SHALL BE BACKFILLED WITH COMPACTED AGGREGATE (CA-6) AND THE GRAVEL SHOULDER RESTORED TO ITS ORIGINAL CONDITION.
3. THE CONTRACTOR SHALL PROVIDE INLET FILTER BASKETS BENEATH ALL OPEN LID STRUCTURES TO MINIMIZE INTRUSION OF DEBRIS/SILT INTO THE STORM SEWER SYSTEM.
4. UPON COMPLETION OF THE UTILITY INSTALLATIONS, THE PUBLIC RIGHT OF WAY SHALL BE RESTORED TO ITS ORIGINAL CONDITION. THIS SHALL INCLUDE BUT NOT BE LIMITED TO 6 INCH TOPSOIL PLACEMENT, HYDROSEED, AGGREGATE SHOULDER REMOVAL AND REPLACEMENT, SIDEWALK REMOVAL AND REPLACEMENT, AND LANDSCAPING REMOVAL AND REPLACEMENT.
5. ALL CASTINGS SHALL BE SHOP PAINTED WITH ASPHALTIC BASE PAINT.
6. THE CONTRACTOR SHALL USE EXTREME CAUTION WHEN INSTALLING PROPOSED INFRASTRUCTURE NEAR THE OVERHEAD UTILITIES LOCATED IN THE NORTH PARKWAY OF BAUER ROAD.
7. A CONCRETE WASHOUT AREA SHOULD BE PROVIDED ON-SITE. CONCRETE CANNOT BE WASHED OUT INTO THE PUBLIC RIGHT-OF-WAY OR STORM SEWER SYSTEM.
8. EXISTING AND PROPOSED STORM SEWER STRUCTURES MUST BE PROTECTED FROM DEBRIS AND SEDIMENT DURING CONSTRUCTION WITH FLEX STORM/INLET FILTERS.
9. ANY OPEN EXCAVATIONS, OR POTENTIALLY DANGEROUS AREAS SHALL BE FENCED OR GUARDED IN AN ACCEPTABLE MANNER AT THE END OF EACH DAY FOR THE PROTECTION OF THE CONTRACTOR'S EMPLOYEES AND GENERAL PUBLIC SAFETY.
10. CONTRACTOR SHALL ENSURE ADJACENT ROADS REMAIN CLEAR AND FREE OF CONSTRUCTION DEBRIS AT ALL TIMES.
11. WHERE SUMP PUMP CONNECTIONS ARE TO CONNECT TO PROPOSED DRAINAGE STRUCTURES, A 6" PVC SDR 35 STUB SHALL BE CAST INTO THE STRUCTURE AT A MINIMUM DEPTH OF 3 FEET (RIM-INVERT). PROVIDE WATERTIGHT PLUG AND STUB.

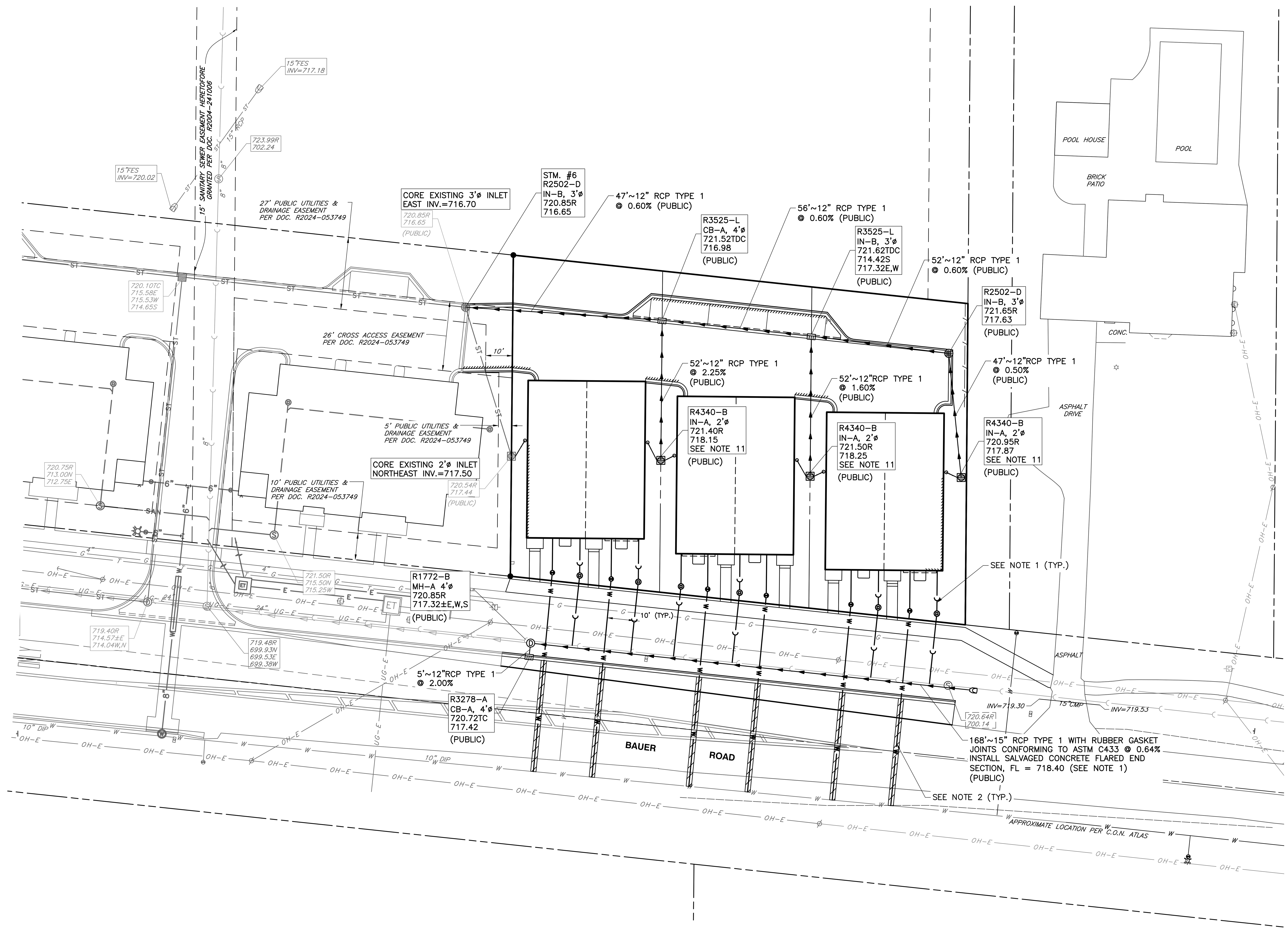

REFERENCE

1. EXISTING CONDITIONS ARE BASED UPON FIELD OBSERVATIONS MADE ON AUGUST 21, 2025 BY CIVIL & ENVIRONMENTAL CONSULTANTS, INC.
1. FIELD DATUM: ILLINOIS STATE PLANE NSRS 2011, EAST ZONE– US SURVEY FOOT CITY OF NAPERVILLE DATUM NAVD 88.
2. UNDERGROUND UTILITY INFORMATION SHOWN HEREON IS BASED UPON FIELD OBSERVATIONS, ATLAS MAPS PROVIDED BY THE CITY OF NAPERVILLE AND THOSE PUBLIC UTILITY COMPANIES OPERATING UNDER FRANCHISE OR CONTRACT WITH THE CITY OF NAPERVILLE.

REVISION RECORD

NO	DATE	DESCRIPTION
1	01/19/2026	REVISED PER CITY OF NAPERVILLE REVIEW COMMENTS DATED 12/12/2025
2	03/17/2026	REVISED PER CITY OF NAPERVILLE REVIEW COMMENTS DATED 02/09/2026.
3	04/27/2026	NO REVISIONS THIS SHEET

ENGINEERING, SURVEYING AND LANDSCAPE ARCHITECTURE IN THE STATE OF NORTH CAROLINA WILL BE PROVIDED BY CEC SURVEYING AND LANDSCAPE ARCHITECTS OF NC, PLLC. SERVICES IN PUERTO RICO WILL BE PROVIDED BY CEC ENGINEERS & CONSULTANTS, LLC. LANDSCAPE ARCHITECTURE SERVICES IN THE STATE OF OHIO WILL BE PROVIDED BY CEC LANDSCAPE ARCHITECTS, LLC.

Civil & Environmental Consultants, Inc.
1230 East Diehl Road
Suite 200
Naperville, IL 60563
Ph: 630.963.6026
www.cecinc.com

REDSTART CONSTRUCTION, INC.
BAUER ROAD DUPLEXES
27W240 BAUER ROAD
NAPERVILLE, ILLINOIS 60563

UTILITY PLAN

DATE:	OCTOBER 21, 2025	DRAWN BY:	ET
DWG SCALE:	1" = 20'	CHECKED BY:	MAJ
PROJECT NO:	347-703	APPROVED BY:	*JGC

DRAWING NO.: **C400**

SHEET 9 OF 12

P:\340-000\347-703\-CADD\Dwg\CV01-FINAL ENGINEERING\347703-CV01-C400.dwg{C400} LS:(4/27/2026 - etrebnik) - LP: 4/27/2026 12:33 PM

EXHIBIT E

STORM MANHOLE - TYPE A (290.01)

WHEN MANHOLE DEPTH IS 12 FT OR LESS T = 8 INCHES
WHEN MANHOLE DEPTH IS OVER 12 FT. T = 10 INCHES

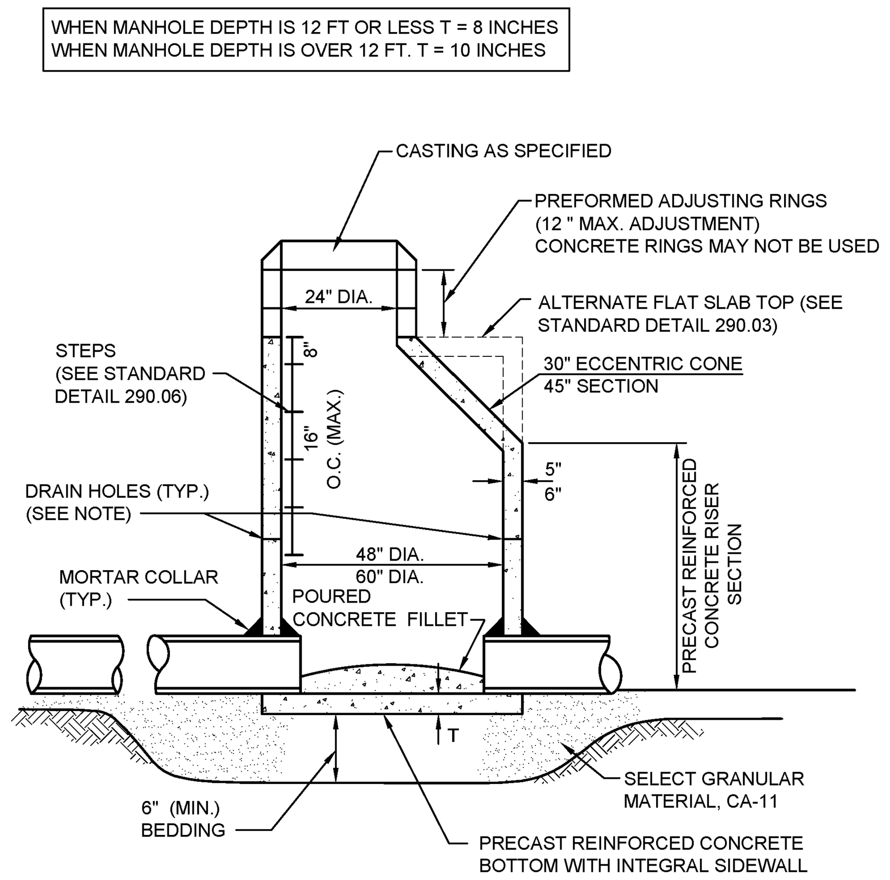

NOTE:

A MINIMUM OF 4 PRECAST OR DRILLED 1" DIAMETER HOLES SHALL BE PROVIDED WITHIN 1' OF THE LOWEST PIPE INVERT. THE HOLES SHALL BE DISTRIBUTED EQUIDISTANT AROUND THE PERIMETER OF THE STRUCTURE. A 1' BY 1' SQUARE OF UNDERDRAIN FILTER CLOTH MATERIAL SHALL BE FIXED OVER EACH DRAIN HOLE ON THE OUTSIDE OF THE STRUCTURE WITH MASTIC MATERIAL TO PREVENT SLIPPAGE DURING BACKFILLING.

City of Naperville STANDARD DETAIL | STORM MANHOLE- TYPE A | REVISED: 08/01/2018 | SHEET 1 OF 1 | STORM 1 | 290.01

CATCH BASIN - TYPE A (290.02)

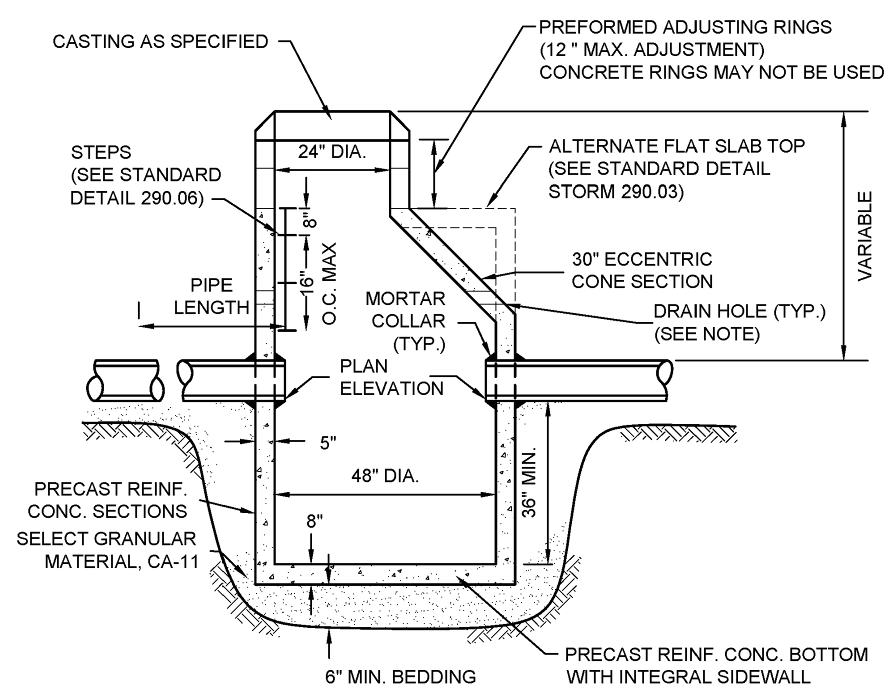

NOTE:

A MINIMUM OF 4 PRECAST OR DRILLED 1" DIAMETER HOLES SHALL BE PROVIDED WITHIN 1' OF THE LOWEST PIPE INVERT. THE HOLES SHALL BE DISTRIBUTED EQUIDISTANT AROUND THE PERIMETER OF THE STRUCTURE. A 1' BY 1' SQUARE OF UNDERDRAIN FILTER CLOTH MATERIAL SHALL BE FIXED OVER EACH DRAIN HOLE ON THE OUTSIDE OF THE STRUCTURE WITH MASTIC MATERIAL TO PREVENT SLIPPAGE DURING BACKFILLING.

City of Naperville STANDARD DETAIL | CATCH BASIN - TYPE A | REVISED: 08/01/2018 | SHEET 1 OF 1 | STORM 2 | 290.02

INLET - TYPE A (290.05)

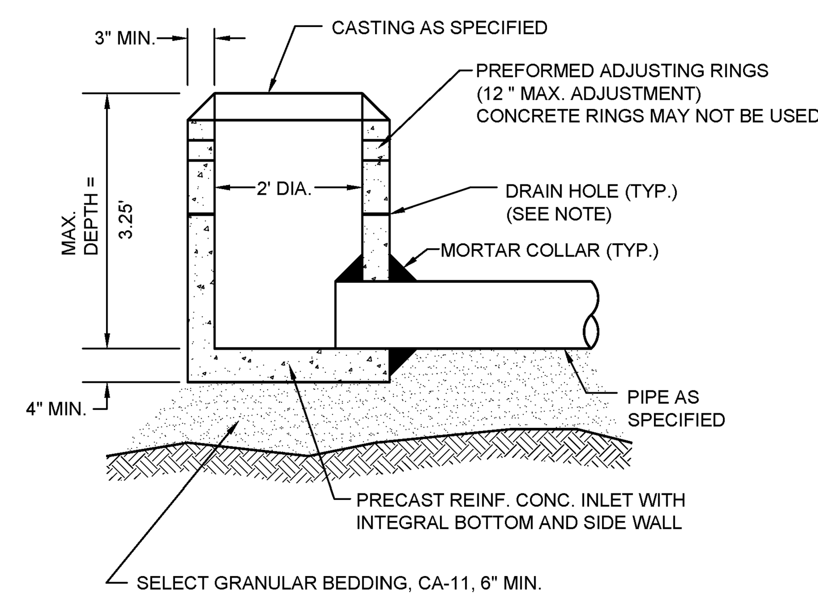

NOTE:

IN PAVED AREAS A MINIMUM OF 4 PRECAST OR DRILLED 1" DIAMETER HOLES SHALL BE PROVIDED WITHIN 1' OF THE LOWEST PIPE INVERT. THE HOLES SHALL BE DISTRIBUTED EQUIDISTANT AROUND THE PERIMETER OF THE STRUCTURE. A 1' BY 1' SQUARE OF UNDERDRAIN FILTER CLOTH MATERIAL SHALL BE FIXED OVER EACH DRAIN HOLE ON THE OUTSIDE OF THE STRUCTURE WITH MASTIC MATERIAL TO PREVENT SLIPPAGE DURING BACKFILLING.

City of Naperville STANDARD DETAIL | INLET - TYPE A | REVISED: 08/01/2018 | SHEET 1 OF 1 | STORM 5 | 290.05

CAST IRON STEPS (290.06)

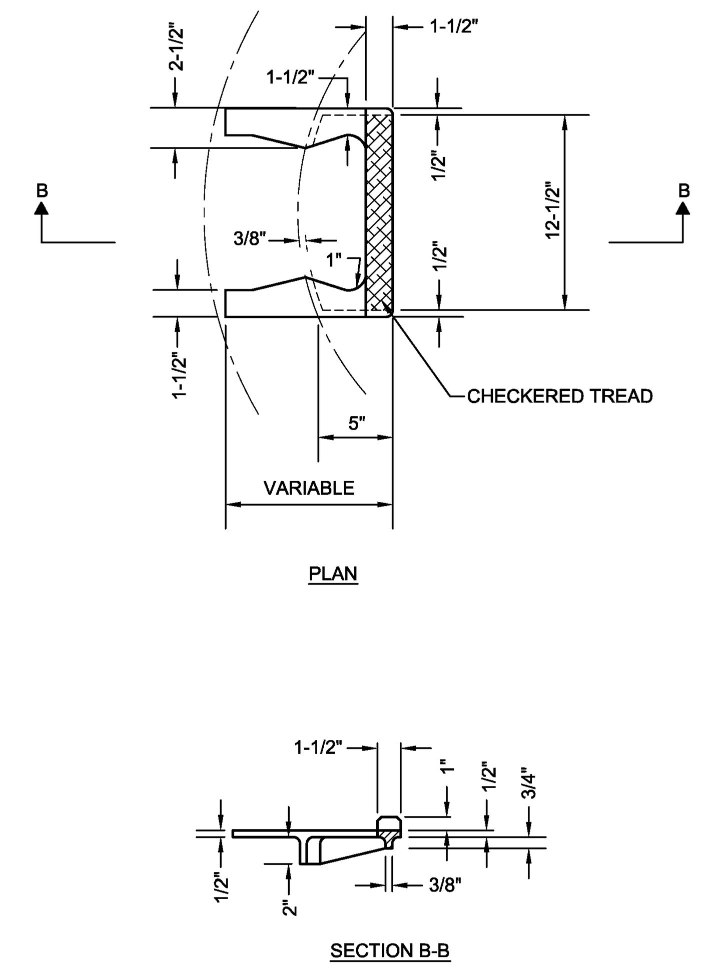

City of Naperville STANDARD DETAIL | CAST IRON STEPS | REVISED: 01/01/2013 | SHEET 1 OF 1 | STORM 6 | 290.06

FRAME & GRATE FOR B-6.12 CURB & GUTTER (DEPRESSED) (290.12)

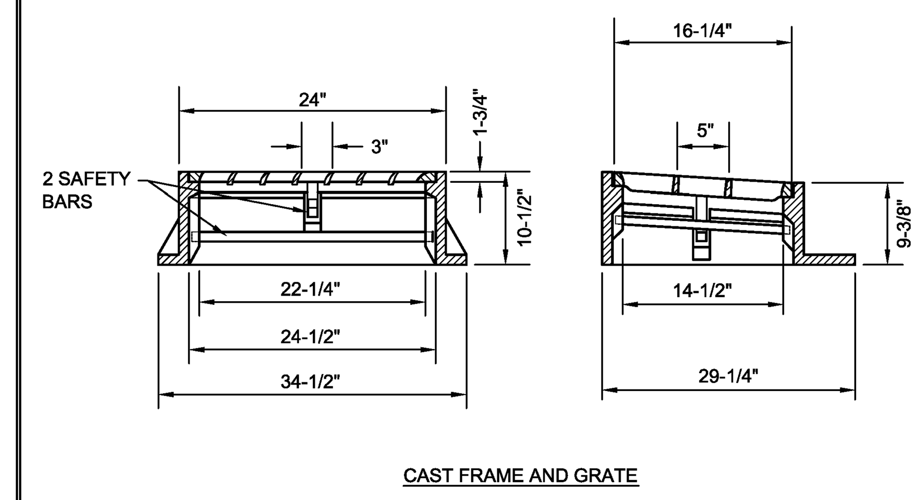

CAST FRAME AND GRATE

NOTES:

1. FRAME AND GRATE SHALL BE NEENAH R-3525-L, EAST JORDAN 5120, OR EQUAL APPROVED BY THE CITY ENGINEER.
2. ALL CASTING SHALL BE SHOP PAINTED WITH AN ASPHALTIC BASE PAINT.
3. ALL CASTINGS SHALL INCLUDE "DUMP NO WASTE. DRAINS TO RIVER".

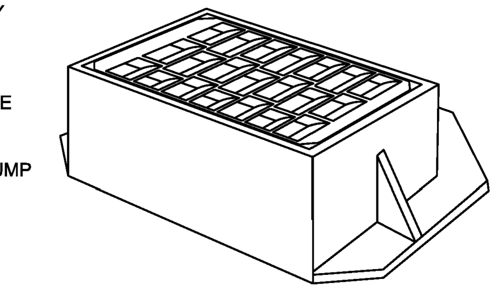

City of Naperville STANDARD DETAIL | FRAME & GRATE FOR B-6.12 CURB & GUTTER (DEPRESSED) | REVISED: 05/15/2015 | SHEET 1 OF 1 | STORM 12 | 290.12

INLET - TYPE B (STANDARD 602306-03)

* For precast reinforced concrete sections, this dimension may vary from the dimension given to plus 6 (150).

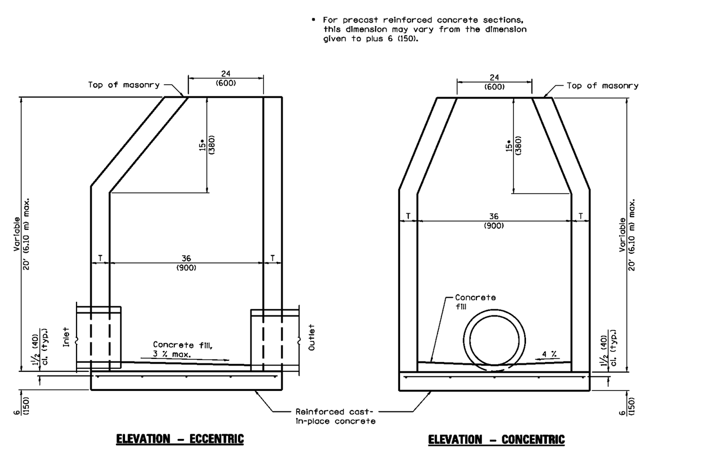

ALTERNATE MATERIALS FOR WALLS	T (min.)
Concrete Masonry Unit	5 (125)
Brick Masonry	8 (200)
Precast Reinforced Concrete Section	3 (75)
Cast-in-Place Concrete	6 (150)

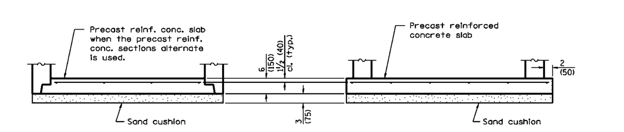

ALTERNATE BOTTOM SLAB

GENERAL NOTES

Bottom slabs shall be reinforced with a minimum of 0.20 sq. in./ft. (420 sq. mm/m) in both directions with a maximum spacing of 12 (300).

Bottom slabs may be connected to the riser as determined by the fabricator; however, only a single row of reinforcement around the perimeter may be utilized.

See Standard 602601 for optional Precast Reinforced Concrete Flat Slab Top.

All dimensions are in inches (millimeters) unless otherwise shown.

Illinois Department of Transportation
PASSED January 1, 2011 ENGINEER OF POLICY AND PROCEDURES
APPROVED January 1, 2011 ENGINEER OF DESIGN AND ENVIRONMENT
ISSUED 1-1-97

DATE	REVISIONS
1-1-11	Detailed rein. in slabs.
	Added max. limit to height.
	Revised general notes.
1-1-09	Switched units to
	English (metric).

INLET – TYPE B
STANDARD 602306-03

FRAME & LID OR GRATE (290.10)

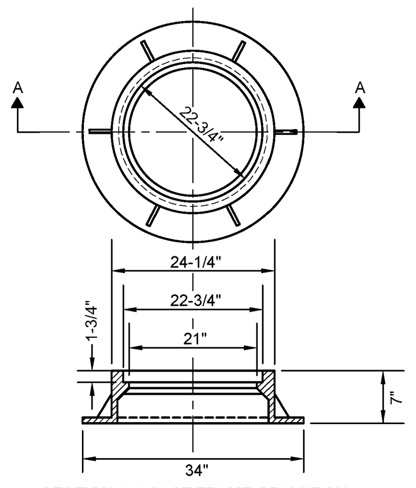

SECTION A-A CAST FRAME GRAY IRON
WT. 250 lbs.

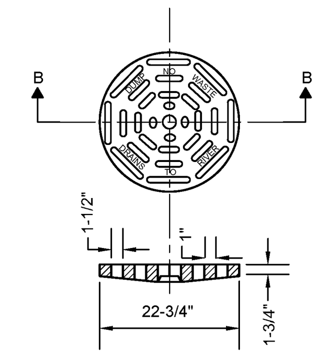

SECTION B-B CAST OPEN LID W.T. 25 lbs

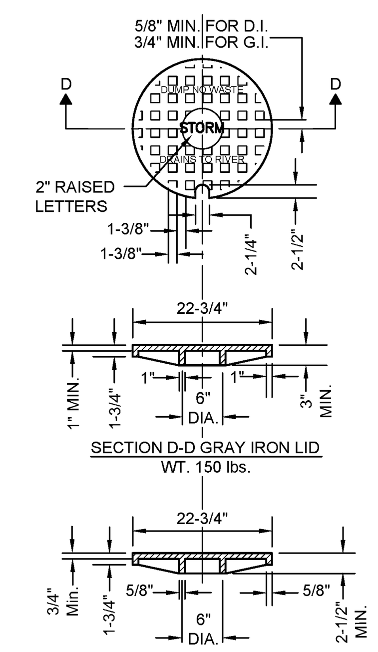

SECTION D-D GRAY IRON LID
WT. 150 lbs.

SECTION D-D OF DUCTILE IRON LID
WT. 125 lbs.

NOTES:

1. FRAME AND GRATE (LID) SHALL BE NEENAH R-2502 FOR OPEN GRATES, R-1772 FOR CLOSED LIDS; EAST JORDAN 1022-2 WITH M-1 GRATE OR TYPE A SOLID COVER, OR EQUAL APPROVED BY THE CITY ENGINEER.
2. ALL LIDS AND COVERS SHALL HAVE MACHINED SURFACES AND SEATS.
3. ALL CASTINGS SHALL BE SHOP PAINTED WITH AN ASPHALTIC BASE PAINT.
4. ALL CASTINGS SHALL INCLUDE "DUMP NO WASTE. DRAINS TO RIVER".

City of Naperville STANDARD DETAIL | FRAME & LID OR GRATE | REVISED: 05/15/2015 | SHEET 1 OF 1 | STORM 10 | 290.10

BEEHIVE GRATE (290.14)

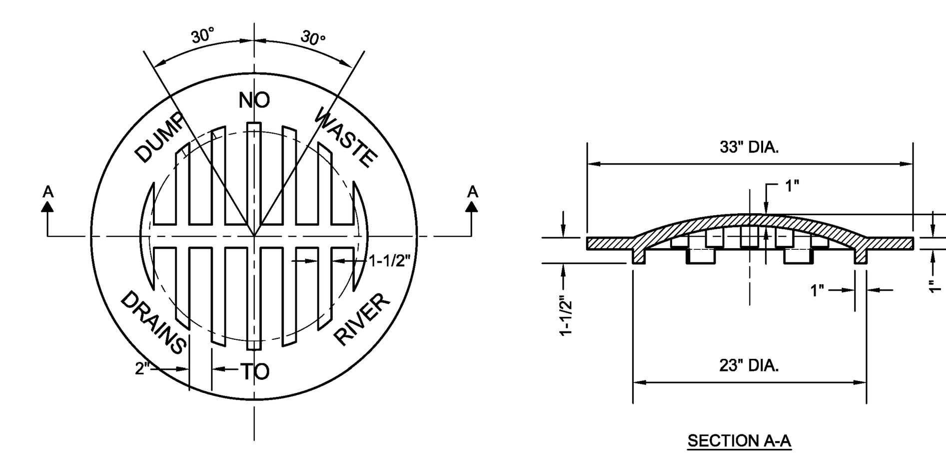

NOTES:

1. BEEHIVE GRATE SHALL BE NEENAH R4340B, EAST JORDAN 6527, OR EQUAL APPROVED BY THE CITY ENGINEER.
2. ALL CASTINGS SHALL BE SHOP PAINTED WITH AN ASPHALTIC BASE PAINT.
3. ALL CASTINGS SHALL INCLUDE "DUMP NO WASTE. DRAINS TO RIVER".

City of Naperville STANDARD DETAIL | BEEHIVE GRATE | REVISED: 05/15/2015 | SHEET 1 OF 1 | STORM 14 | 290.14

FLAT SLAB TOP PRECAST REINFORCED CONCRETE (290.03)

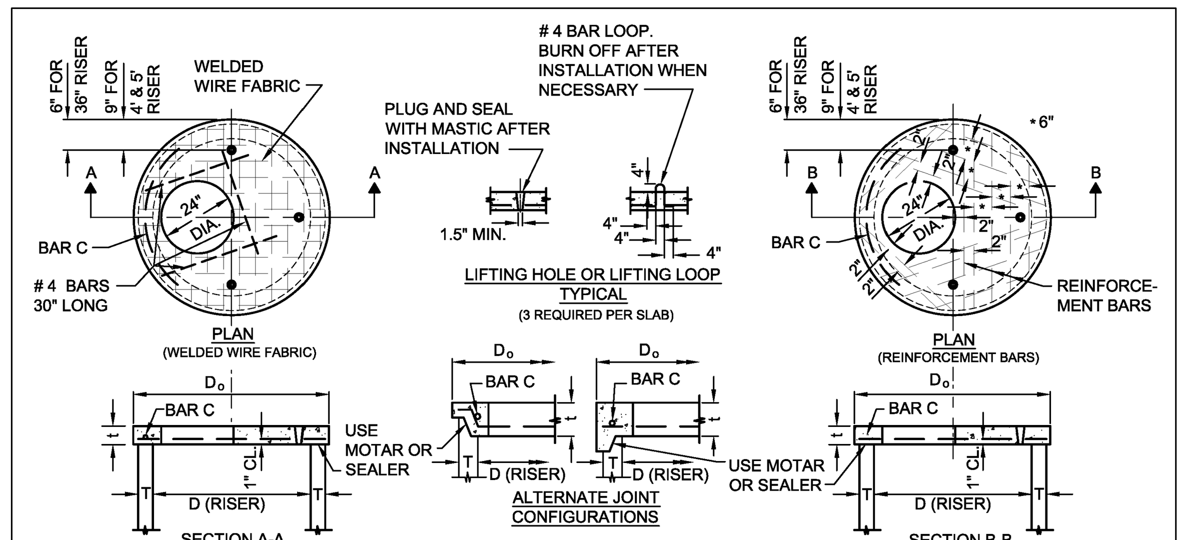

TABLE

D	T	D_o (MIN)	t	REINFORCEMENT "A" W.W.F. EACH DIRECTION	OR	BAR SIZE	#4 Bar C LENGTH	#4 Bar C RADIUS
3'	SEE APPLICABLE STANDARDS	D + 2T	6"	0.20 SQ. INCH/FT.		#4	48"	19"
4'			5"	0.35 SQ. INCH/FT.		#5	54"	26"
5'			8"	0.35 SQ. INCH/FT.		#5	60"	32"

NOTE:
ALL DIMENSIONS ARE IN INCHES UNLESS OTHERWISE SHOWN

City of Naperville STANDARD DETAIL | FLAT SLAB TOP PRECAST REINFORCED CONCRETE | REVISED: 01/01/2013 | SHEET 1 OF 1 | STORM 3 | 290.03

FRAME & GRATE FOR B-6.12 CURB & GUTTER (290.11)

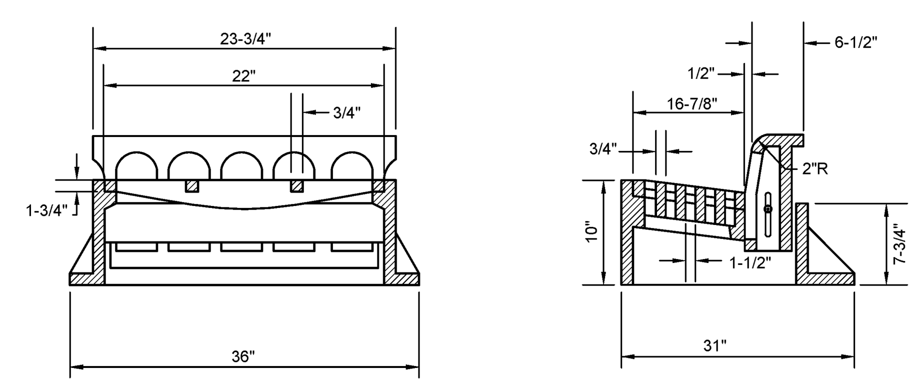

CAST FRAME AND GRATE GRAY IRON
TOTAL WT. 500 LBS.

NOTES:

1. FRAME AND GRATE SHALL BE NEENAH R-3278-A, EAST JORDAN IRON 7220, OR EQUAL APPROVED BY THE CITY ENGINEER.
2. ALL CASTING SHALL BE SHOP PAINTED WITH AN ASPHALTIC BASE PAINT.
3. SEE STANDARD DETAIL 590.20 FOR CORRESPONDING CURB.
4. ALL CASTINGS SHALL INCLUDE "DUMP NO WASTE. DRAINS TO RIVER".

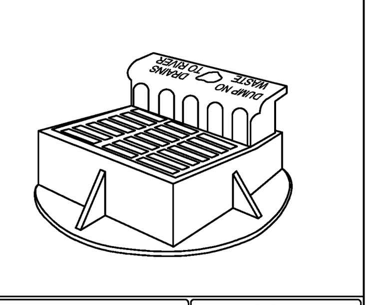

City of Naperville STANDARD DETAIL | FRAME & GRATE FOR B-6.12 CURB & GUTTER | REVISED: 05/15/2015 | SHEET 1 OF 1 | STORM 11 | 290.11

SIDEWALK CONSTRUCTION (590.31)

NOTES:

1. ALL AGGREGATE SUB-BASE SHALL BE MECHANICALLY COMPACTED.
2. SIDEWALK THICKNESS AT CURB RAMPS SHALL BE A MINIMUM OF 6" PCC ON 2" AGGREGATE SUB BASE.
3. SIDEWALK CONSTRUCTION SHALL FOLLOW APPLICABLE IDOT STANDARDS.
4. SIDEWALKS SHALL FOLLOW CURRENT ADA GUIDELINES.

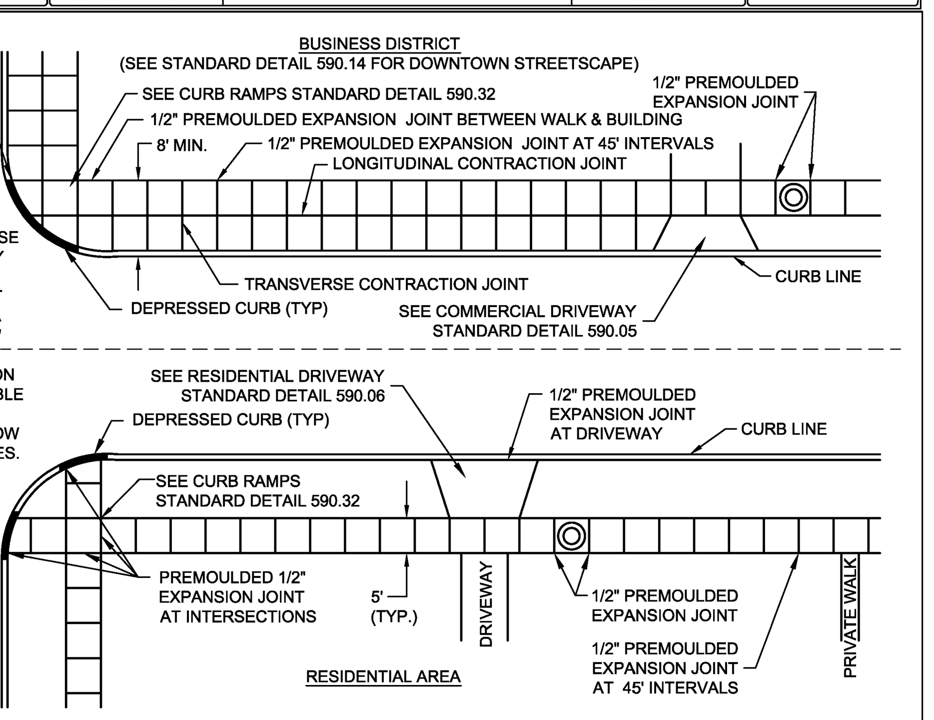

City of Naperville STANDARD DETAIL | SIDEWALK CONSTRUCTION | REVISED: 01/01/2013 | SHEET 1 OF 1 | PAVEMENT 31 | 590.31

STORM SEWER TRENCH SECTION IN PAVED AREAS (290.20)

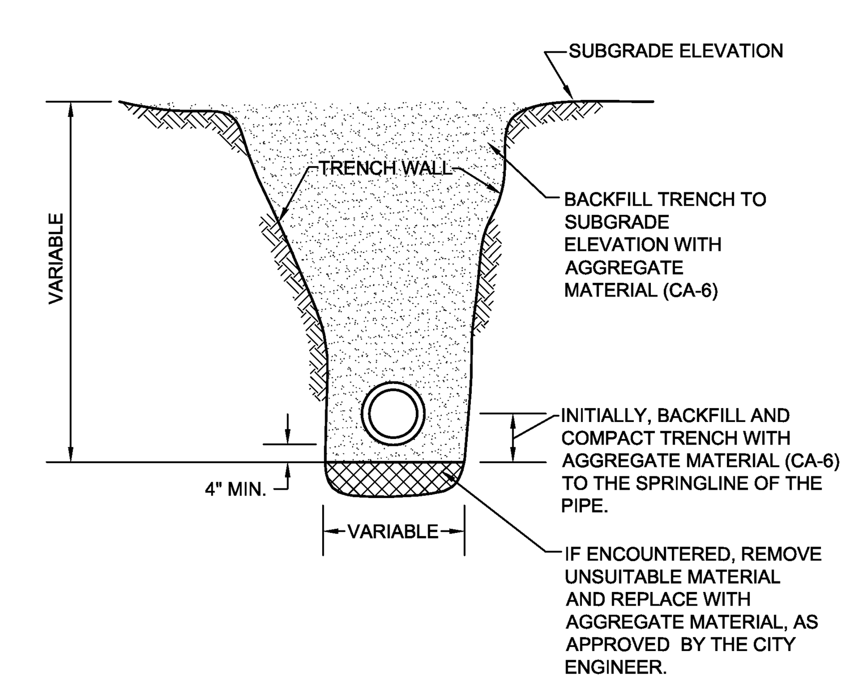

NOTES:

1. TRENCH BACKFILL MATERIAL SHALL BE COMPACTED IN ACCORDANCE WITH SECTION 550.07 OF THE IDOT STANDARD SPECIFICATIONS FOR ROAD AND BRIDGE CONSTRUCTION.
2. THIS DETAIL SHALL BE USED WHEREVER THE TRENCH IS MADE IN THE PROPOSED ROADWAY SUBGRADE, AND WHEREVER THE INNER EDGE OF THE TRENCH IS CLOSER THAN 2' TO THE EDGE OF THE PROPOSED PAVEMENT, CURB AND GUTTER, AND SIDEWALK.

City of Naperville STANDARD DETAIL | STORM SEWER TRENCH SECTION IN PAVED AREAS | REVISED: 01/01/2013 | SHEET 1 OF 1 | STORM 20 | 290.20

REVISION RECORD

NO	DATE	DESCRIPTION
1	01/19/2026	NO REVISIONS THIS SHEET
2	03/17/2026	NO REVISIONS THIS SHEET
3	04/27/2026	NO REVISIONS THIS SHEET

ENGINEERING, SURVEYING AND LANDSCAPE ARCHITECTURE IN THE STATE OF NORTH CAROLINA WILL BE PROVIDED BY CEC SURVEYING AND LANDSCAPE ARCHITECTS OF NC, PLLC. SERVICES IN PUERTO RICO WILL BE PROVIDED BY CEC ENGINEERS & CONSULTANTS, LLC. LANDSCAPE ARCHITECTURE SERVICES IN THE STATE OF OHIO WILL BE PROVIDED BY CEC LANDSCAPE ARCHITECTS, LLC.

Civil & Environmental Consultants, Inc.
1230 East Diehl Road
Suite 200
Naperville, IL 60563
Ph: 630.963.6026
www.cecinc.com

REDSTART CONSTRUCTION, INC.
BAUER ROAD DUPLEXES
27W240 BAUER ROAD
NAPERVILLE, ILLINOIS 60563

DETAILS - 1

DATE:	OCTOBER 21, 2025	DRAWN BY:	ET
DWG SCALE:	NOT TO SCALE	CHECKED BY:	MAJ
PROJECT NO:	347-703		
APPROVED BY:	*JGC		

DRAWING NO.: C800
SHEET 10 OF 12

P:\340-000\347-703\-CADD\Dwg\CV01-FINAL ENGINEERING\347703-CV01-C800.dwg{C800} LS:(4/27/2026 - etrebicka) - LP: 4/27/2026 12:33 PM

EXHIBIT E

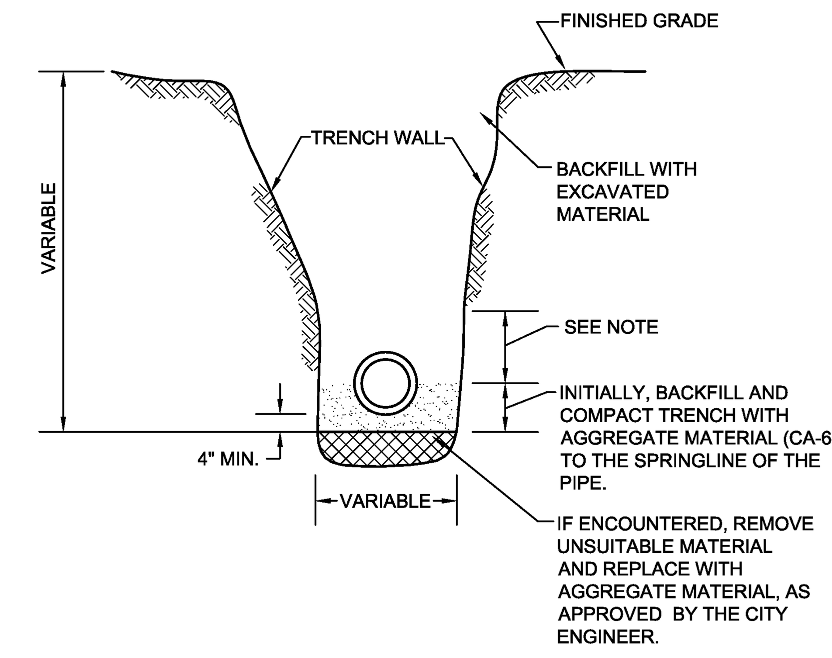

NOTE:

FOR PVC AND HDPE PIPE, BACKFILL WITH AGGREGATE MATERIAL (CA-6) TO 6" ABOVE THE TOP OF PIPE.

City of Naperville STANDARD DETAIL | STORM SEWER TRENCH SECTION IN NON-PAVED AREAS | REVISED: 01/01/2013 | SHEET 1 OF 1 | STORM 21 | 290.21

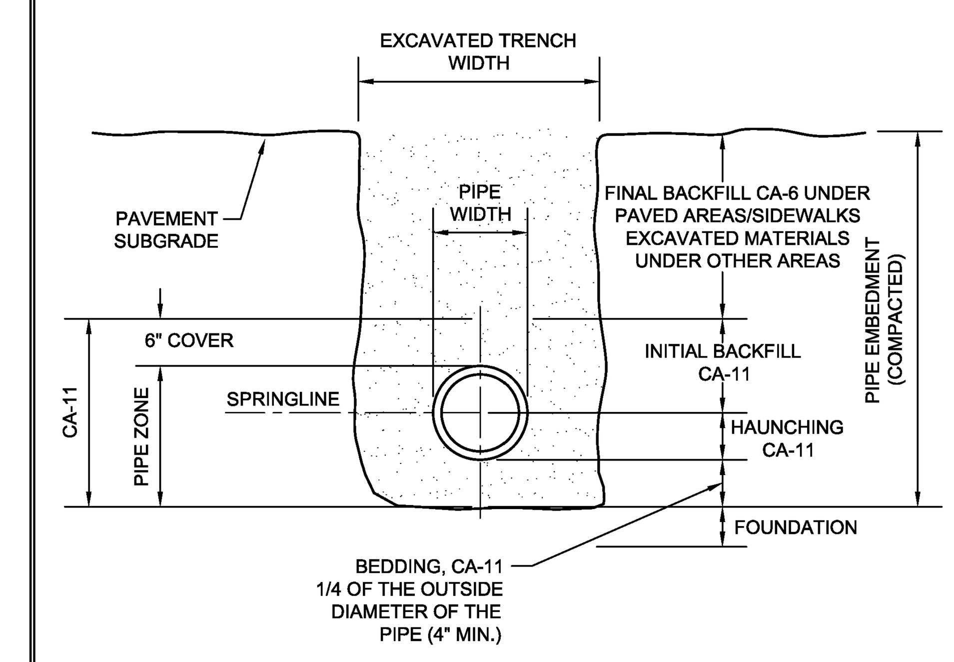

NOTES:

1. IN PAVED AREAS, ALL TRENCHES MUST BE COMPACTED IN CONFORMANCE WITH SECTION 550.07 OF THE IDOT STANDARD SPECIFICATIONS FOR ROAD & BRIDGE CONSTRUCTION.
2. IF FOUNDATION IS UNSUITABLE TO BED PIPE, UNDERCUTS MAY BE REQUIRED AS DIRECTED BY THE ENGINEER.

City of Naperville STANDARD DETAIL | TRENCH SECTION FOR PVC PIPE | REVISED: 01/01/2013 | SHEET 1 OF 1 | SANITARY 10 | 390.10

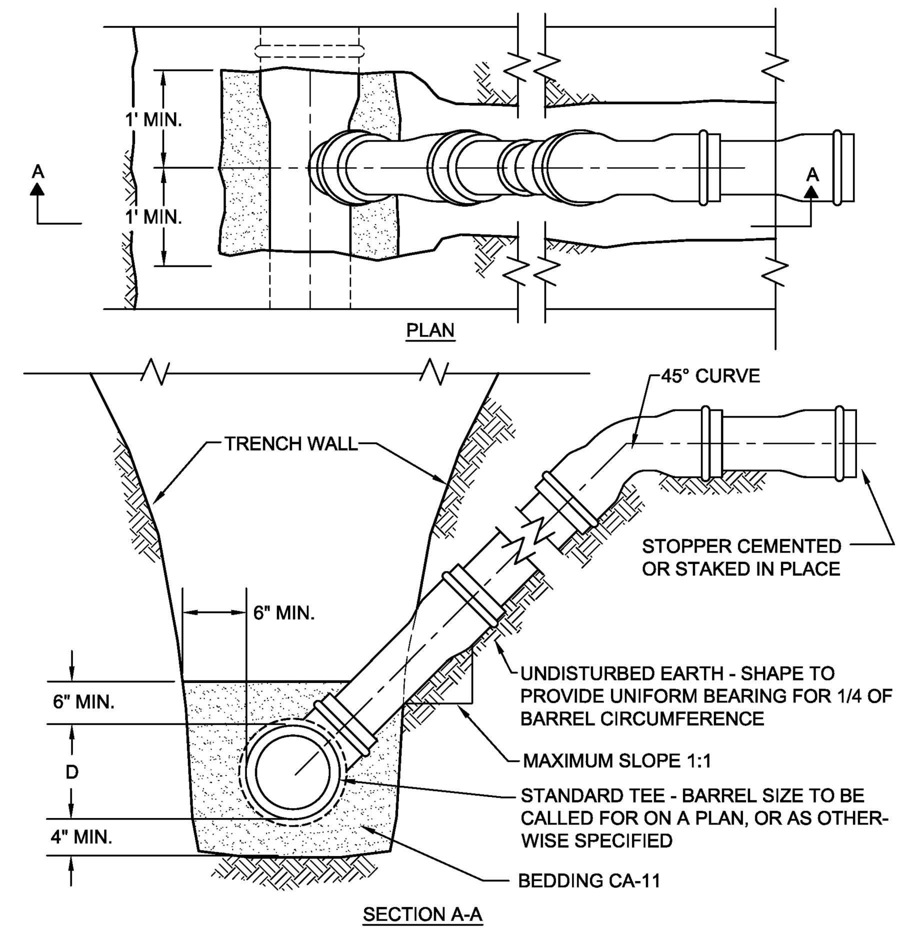

1. THE OPEN ENDS SHALL BE PROTECTED FROM DEBRIS AND GROUNDWATER ENTERING THE LATERAL WITH AN APPROVED PLUG.
2. MAXIMUM SLOPE SHALL BE LESS THAN 1:1 WHEN IT IS NECESSARY TO SECURE BEDDING IN UNDISTURBED EARTH.
3. WHEN A SERVICE CONNECTION IS TAPPED INTO PVC MAIN, THEN A SEWER SADDLE SHALL BE USED. GENECO TYPE "SEALTITE" OR APPROVED EQUAL. BANDS, NUTS AND BOLTS MUST BE 304 STAINLESS STEEL.
4. SDR 26 PVC PIPE MEETING REQUIREMENTS OF ASTM D-2241-05 AND JOINTS CONFORMING TO ASTM D-3139-98(2005) OR LATEST EDITIONS.

City of Naperville STANDARD DETAIL | RISE FOR SERVICE LATERAL | REVISED: 01/01/2013 | SHEET 1 OF 1 | SANITARY 20 | 390.20

FIGURE 1
STANDARD TEE CONNECTION
EXISTING CLAY ON PVC

FIGURE 2
STANDARD SADDLE CONNECTION
EXISTING PVC OR LINED PIPE

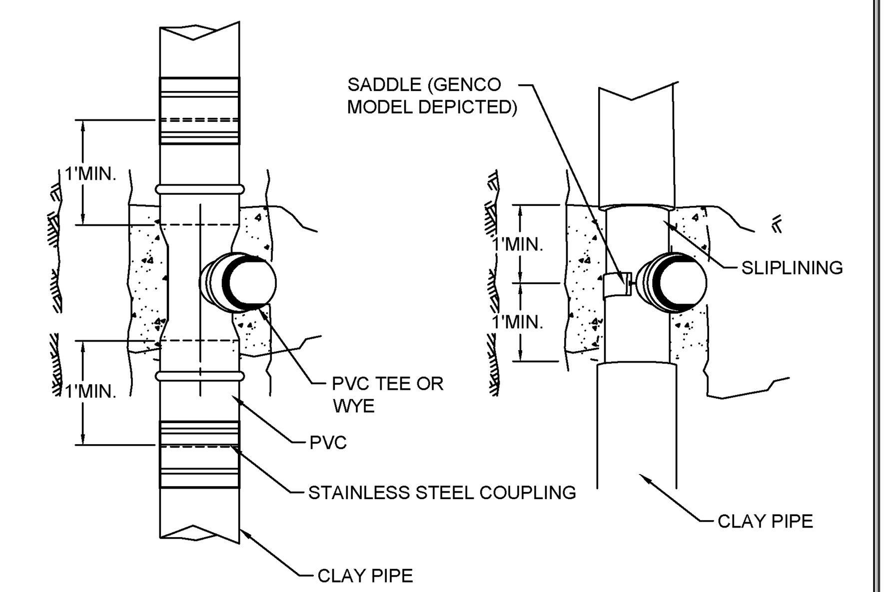

STANDARD TEE CONNECTION-FIGURE 1

1. BYPASS OR RESTRICT FLOW IN PIPE AS REQUIRED.
2. SAW CUT AND REMOVE EXISTING PIPE TO MINIMUM EXTENT SHOWN IN FIGURE 1.
3. INSTALL STANDARD PVC TEE AND PIPE AS SHOWN, PVC SHALL BE SDR26, ASTM 2241.
4. FLEXIBLE COUPLING SHALL BE A NON-SHEARING TYPE TRANSITION COUPLING: FERNCO STRONG BACK RC 1000 SERIES, CASCADE STYLE CSS COUPLING, OR APPROVED EQUAL.

STANDARD SADDLE CONNECTION FIGURE 2

1. FOR LINED PIPE CAREFULLY REMOVE OLD CLAY PIPE TO MINIMUM EXTENT SHOWN WITHOUT DAMAGING LINER PIPE.
2. HOLES FOR SADDLE INLET SHALL BE LAID OUT USING SADDLE AS TEMPLATE AND CUT WITH APPROPRIATE EQUIPMENT NOT DAMAGE THE PIPE TO REMAIN. HOLE TO BE BE DE BURRED AND BEVELED WHERE REQUIRED TO PROVIDE HOLE SLOPE TO CONFORM TO THE FITTING.
3. SADDLE SHALL BE SEALTITE TEE "U" MODEL 40 BY GENCO, CASCADE STYLE CSWRY OR CSWRT, OR APPROVED EQUAL.

City of Naperville STANDARD DETAIL | SANITARY SEWER SERVICE CONNECTION | REVISED: 08/01/2018 | SHEET 1 OF 1 | SANITARY 21 | 390.21

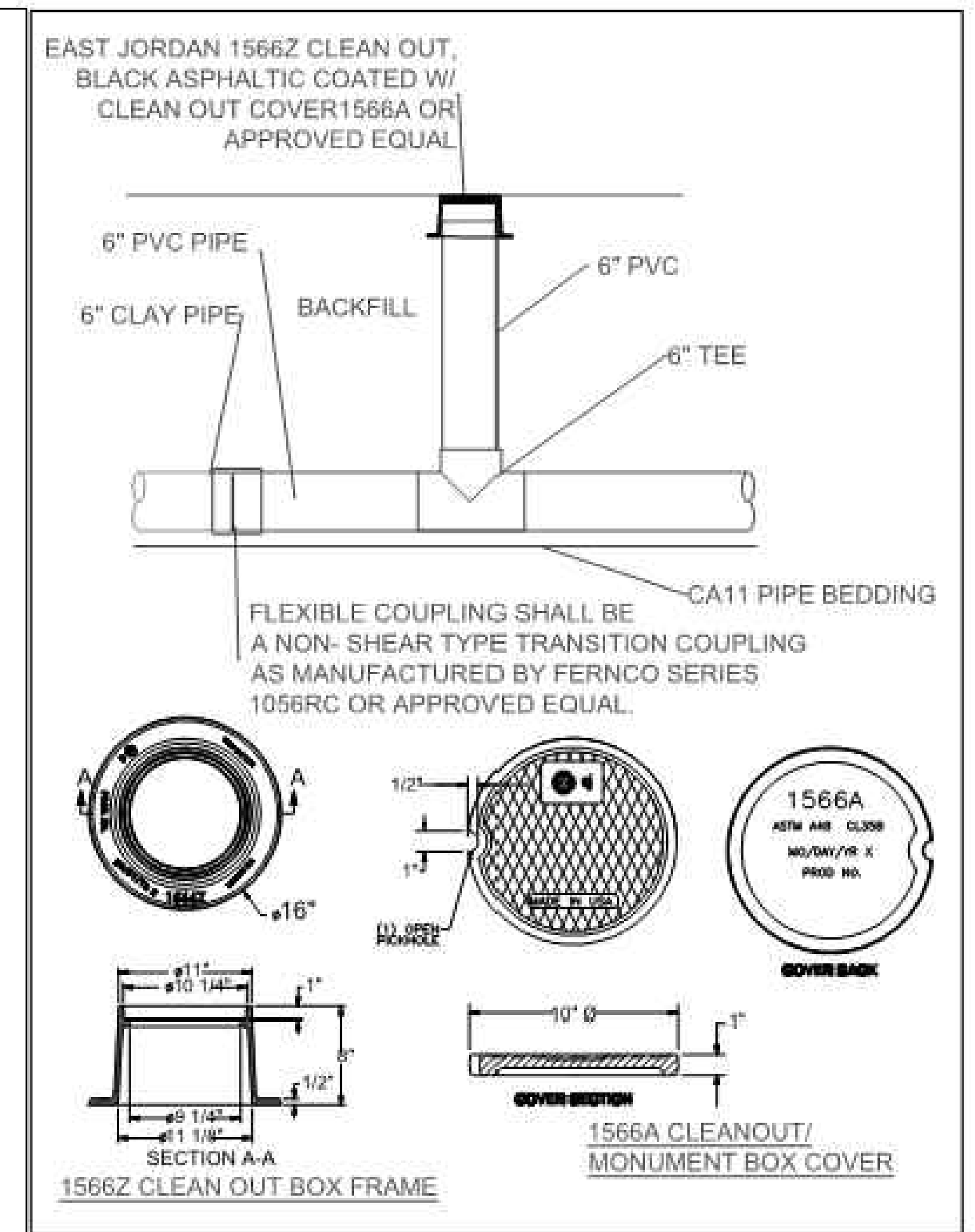

City of Naperville STANDARD DETAIL | SANITARY SEWER CLEANOUT | EFFECTIVE: 1/15/2020 | SHEET 1 OF 1 | SAN 23 | 390.23

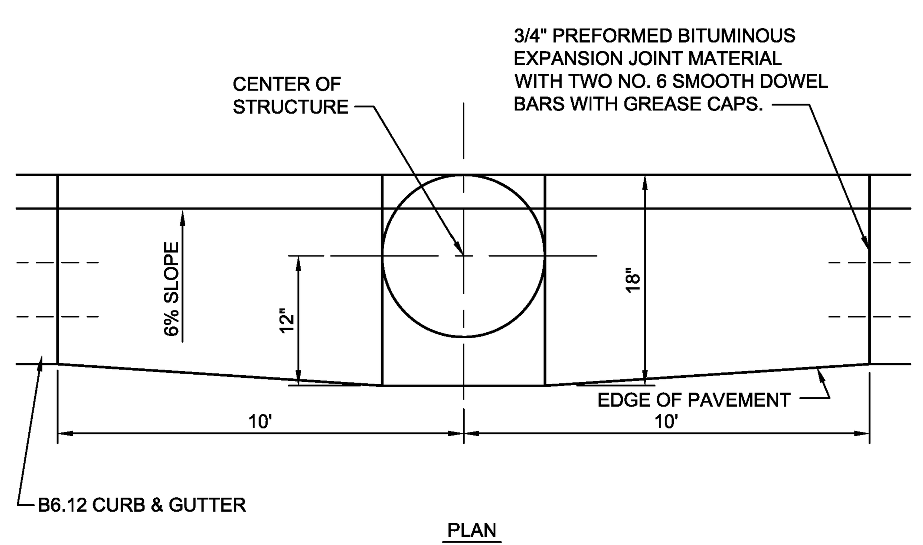

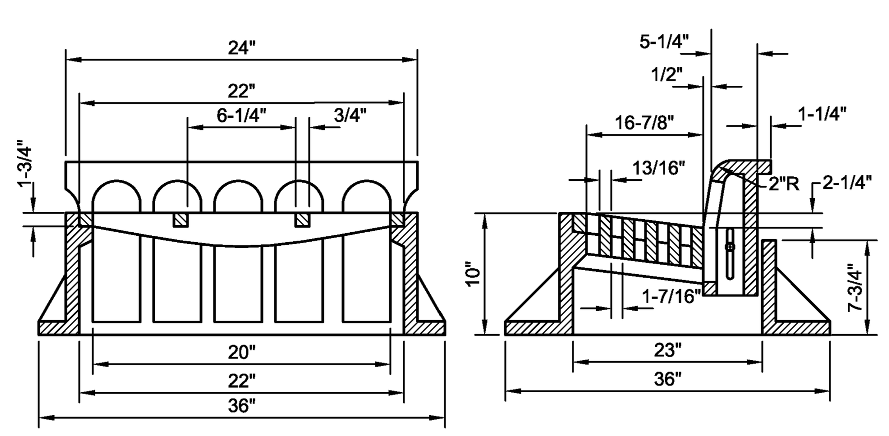

NOTES:

1. GRATE & CASTING SHALL BE EAST JORDAN 7220 OR NEENAH R-3278-A OR AS APPROVED BY THE CITY ENGINEER.
2. ALL CASTINGS SHALL BE SHOP PAINTED WITH AN ASPHALTIC BASE.

City of Naperville STANDARD DETAIL | B6.12 BARRIER CURB & GUTTER AT CURB INLETS | REVISED: 01/01/2013 | SHEET 1 OF 1 | PAVEMENT 21 | 590.21

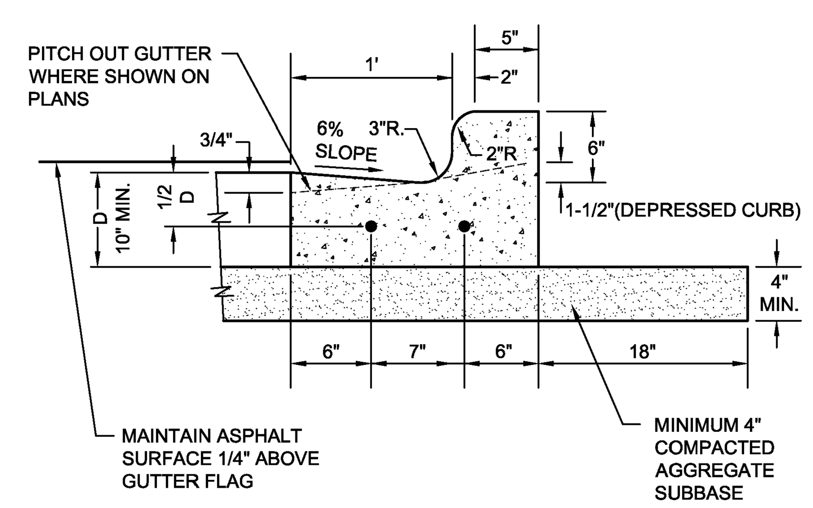

NOTES:

1. 3/4" PREFORMED BITUMINOUS EXPANSION JOINT WITH TWO (2) NUMBER 6 COATED SMOOTH DOWEL BARS (3/4" DIA. X 18") WITH GREASE CAPS SHALL BE PLACED EVERY 150', 10' EITHER SIDE OF DRAINAGE STRUCTURES, P.C.'S, RADIUS POINTS AND BACK OF CUL-DE-SACS. WHEN EXPANSION JOINTS ARE CONSTRUCTED ADJACENT TO EXISTING CURB & GUTTER THE EXISTING CURB SHALL BE DRILLED AND TWO (2) NUMBER 6 COATED SMOOTH DOWEL BARS (3/4" X 18") GROUTED IN PLACE. GREASE CAPS SHALL BE PLACED ON THE SIDE OF THE NEW CURB AND GUTTER SHALL HAVE A PINCHED STOP THAT WILL PROVIDE A MINIMUM 1" EXPANSION.
2. TOOLED CONTROL JOINTS OR SAWCUTS SHALL BE MADE EVERY 15'.
3. SAWCUTS SHALL BE MADE WITHIN TWENTY-FOUR (24) HOURS AND SEALED WITH A CITY APPROVED JOINT SEALANT. JOINTS SHALL BE CLEAN AND DRY PRIOR TO APPLICATION OF SEALANT.
4. FOR CURB AND GUTTER CONSTRUCTED OVER UTILITY TRENCHES, TWO (2) EPOXY COATED REINFORCING BARS (NO. 4) SHALL BE PLACED IN THE CURB AND GUTTER, CENTERED OVER THE TRENCH.

City of Naperville STANDARD DETAIL | B6.12 BARRIER CURB & GUTTER | REVISED: 01/01/2013 | SHEET 1 OF 1 | PAVEMENT 20 | 590.20

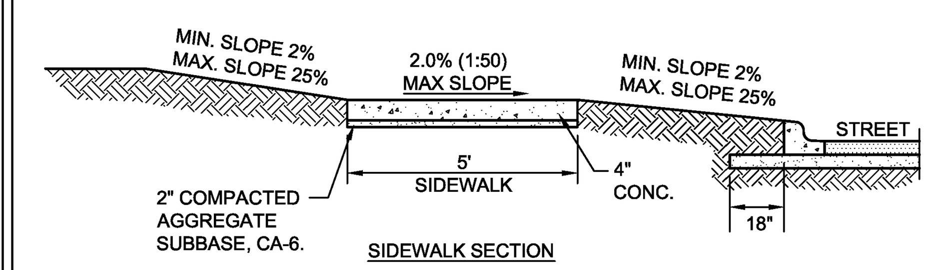

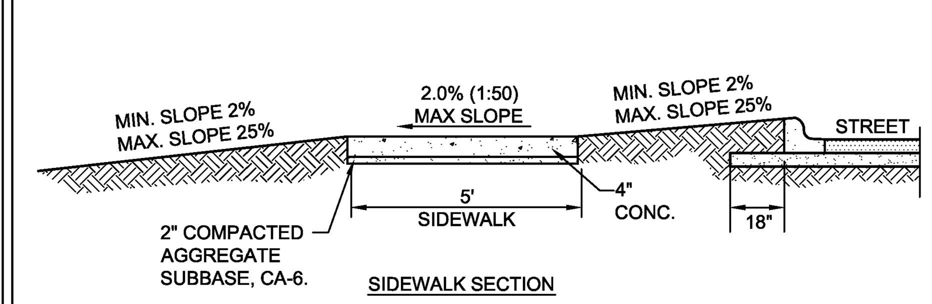

NOTES:

1. CONCRETE SHALL BE IDOT CLASS SI.
2. MINIMUM SIDEWALK THICKNESS SHALL BE 4".
3. SIDEWALK THICKNESS ACROSS DRIVEWAYS SHALL BE AT A MINIMUM 6" FOR RESIDENTIAL DRIVEWAYS AND 8" FOR COMMERCIAL DRIVEWAYS.
4. MAXIMUM LONGITUDINAL SLOPE SHALL NOT EXCEED 5% (20:1). FOR ANY SLOPE IN EXCESS OF 5%, ALL REQUIREMENTS OF THE ILLINOIS ACCESSIBILITY CODE (LATEST EDITION) SHALL BE MET.
5. MINIMUM TRANSVERSE SLOPE SHALL BE 1.0% (1:100). MAXIMUM TRANSVERSE SLOPE SHALL BE 2.0% (1:50).
6. A MINIMUM 2" AGGREGATE SUBBASE (CA-6) SHALL BE PROVIDED. (4" THROUGH COMMERCIAL DRIVEWAYS).
7. AGGREGATE SUBBASE SHALL BE MECHANICALLY COMPACTED.
8. ALL SIDEWALKS SHALL BE PROMPTLY BACKFILLED AND PROTECTED FROM DAMAGE.
9. SIDEWALK CONSTRUCTION SHALL FOLLOW APPLICABLE IDOT STANDARDS.
10. SIDEWALKS SHALL FOLLOW CURRENT ADA GUIDELINES.

City of Naperville STANDARD DETAIL | SIDEWALK | REVISED: 01/01/2013 | SHEET 1 OF 1 | PAVEMENT 30 | 590.30

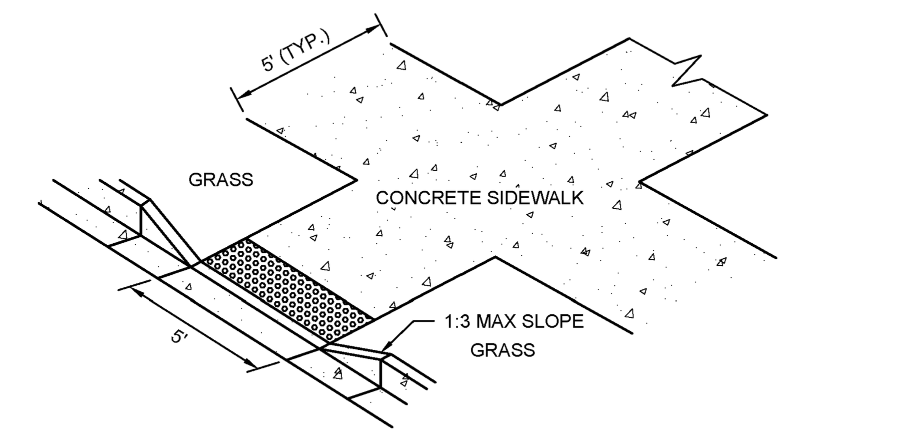

NOTES:

1. ALL AGGREGATE SUB-BASE SHALL BE MECHANICALLY COMPACTED.
2. SIDEWALK THICKNESS AT CURB RAMPS SHALL BE A MINIMUM OF 6" PCC ON 2" AGGREGATE SUB BASE.
3. SIDEWALK CONSTRUCTION SHALL FOLLOW APPLICABLE IDOT STANDARDS.
4. SIDEWALKS SHALL FOLLOW CURRENT ADA GUIDELINES.

APPLICABLE IDOT STANDARD DETAILS (USE LATEST REVISION:

424001-XX	PERPENDICULAR CURB RAMPS FOR SIDEWALKS
424006-XX	DIAGONAL CURB RAMPS FOR SIDEWALKS
424011-XX	CORNER PARALLEL CURB RAMPS FOR SIDEWALKS
424016-XX	MID-BLOCK CURB RAMPS FOR SIDEWALKS
424021-XX	DEPRESSED CORNER FOR SIDEWALKS
424026-XX	ENTRANCE/ALLEY PEDESTRIAN CROSSINGS
424031-XX	MEDIAN PEDESTRIAN CROSSINGS
606001-XX	CONCRETE CURB TYPE B AND COMB CONCRETE CURB AND GUTTER

APPROVED ADA DETECTABLE WARNING TILES:

1. ADA SOLUTIONS - CAST IN PLACE REPLACEABLE
2. ARMOR TILE - CAST IN PLACE
3. DETECTILE - SLIMTEK II
4. TUFTILE - POLYMER WET-SET

City of Naperville STANDARD DETAIL | CURB RAMPS | REVISED: 08/01/2018 | SHEET 1 OF 1 | PAVEMENT 32 | 590.32

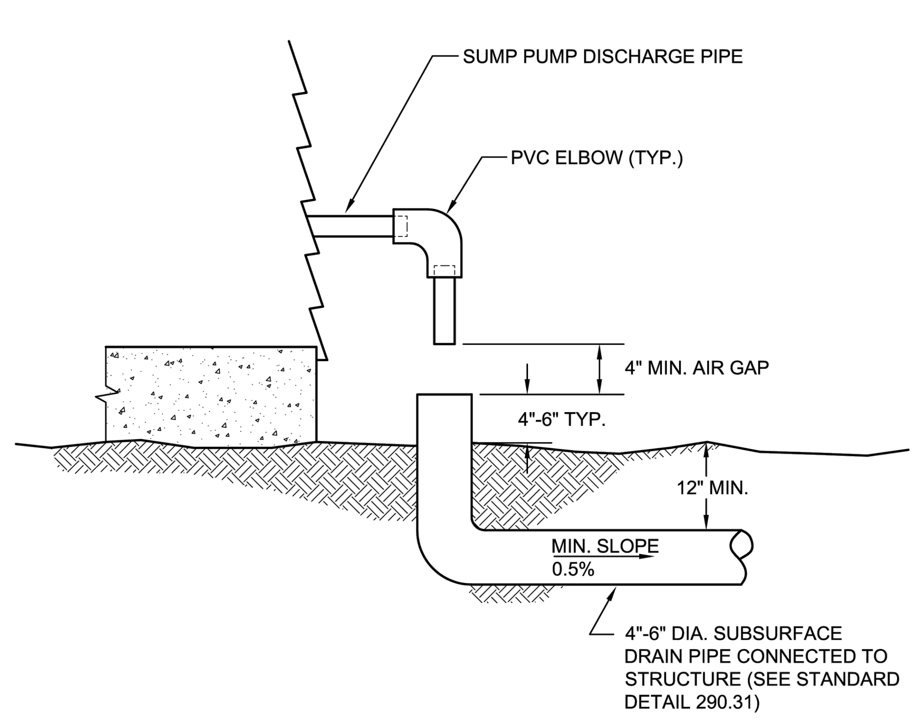

City of Naperville STANDARD DETAIL | SUMP PUMP CONNECTION | REVISED: 01/01/2013 | SHEET 1 OF 1 | STORM 30 | 290.30

REVISION RECORD

NO	DATE	DESCRIPTION
1	01/19/2026	NO REVISIONS THIS SHEET
2	03/17/2026	NO REVISIONS THIS SHEET
3	04/27/2026	NO REVISIONS THIS SHEET

ENGINEERING, SURVEYING AND LANDSCAPE ARCHITECTURE IN THE STATE OF NORTH CAROLINA WILL BE PROVIDED BY CEC SURVEYING AND LANDSCAPE ARCHITECTS OF NC, PLLC. SERVICES IN PUERTO RICO WILL BE PROVIDED BY CEC ENGINEERS & CONSULTANTS, LLC. LANDSCAPE ARCHITECTURE SERVICES IN THE STATE OF OHIO WILL BE PROVIDED BY CEC LANDSCAPE ARCHITECTS, LLC.

Civil & Environmental Consultants, Inc.
1230 East Diehl Road
Suite 200
Naperville, IL 60563
Ph: 630.963.6026
www.cecinc.com

REDSTART CONSTRUCTION, INC.
BAUER ROAD DUPLEXES
27W240 BAUER ROAD
NAPERVILLE, ILLINOIS 60563

DETAILS - 2

DATE:	OCTOBER 21, 2025	DRAWN BY:	ET
DWG SCALE:	NOT TO SCALE	CHECKED BY:	MAJ
PROJECT NO:	347-703		
APPROVED BY:	*JGC		

DRAWING NO.: **C801**

SHEET 11 OF 12

P:\340-000\347-703\-CADD\Dwg\CV01-FINAL ENGINEERING\347703-CV01-C800.dwg{C801} LS:(4/27/2026 - etrebicka) - LP: 4/27/2026 12:33 PM

EXHIBIT E

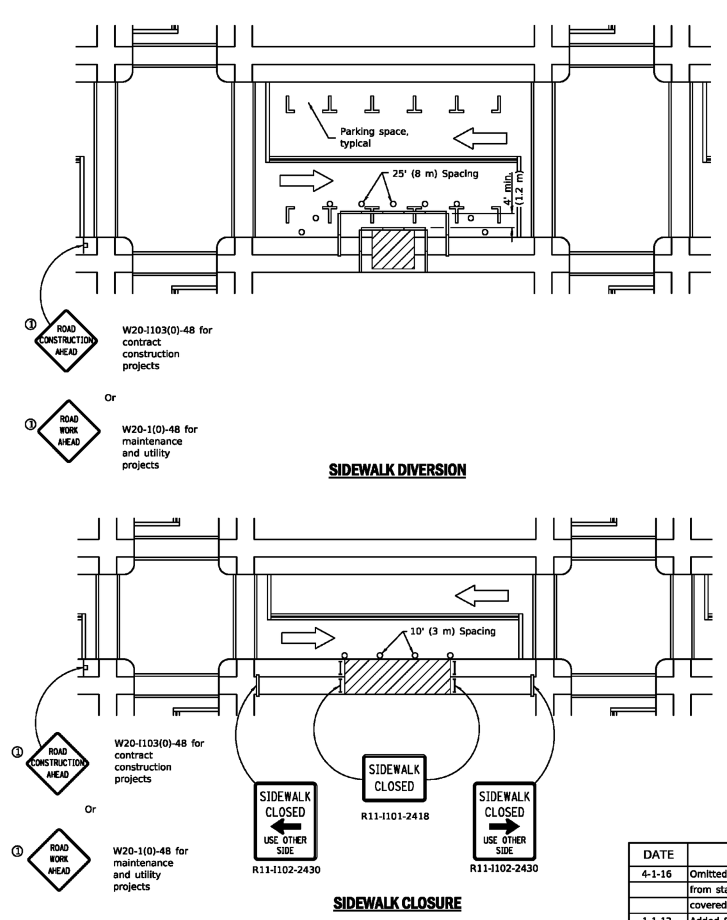

① Omit whenever duplicated by road work traffic control.

SYMBOLS

- Work area
- Sign on portable or permanent support
- Barricade or drum
- Cone, drum or barricade
- Type III barricade
- Detectable pedestrian channelizing barricade

GENERAL NOTES

This Standard is used where, at any time, pedestrian traffic must be rerouted due to work being performed.

This Standard must be used in conjunction with other Traffic Control & Protection Standards when roadway traffic is affected.

Temporary facilities shall be detectable and accessible.

The temporary pedestrian facilities shall be provided on the same side of the closed facilities whenever possible.

The SIDEWALK CLOSED / USE OTHER SIDE sign shall be placed at the nearest crosswalk or intersection to each end of the closure. Where the closure occurs at a corner, the signs shall be erected on the corners across the street from the closure. The SIDEWALK CLOSED signs shall be used at the ends of the actual closures.

Type III barricades and R11-2-4830 signs shall be positioned as shown in "ROAD CLOSED TO ALL TRAFFIC" detail on Standard 701901.

All dimensions are in inches (millimeters) unless otherwise shown.

Illinois Department of Transportation — PASSED April 1, 2016 ENGINEER OF SAFETY ENGINEERING; APPROVED April 1, 2016 ENGINEER OF DESIGN AND ENVIRONMENT; ISSUED 1-1-97

DATE	REVISIONS
4-1-16	Omitted orange safety fence from standard as this is covered in the std. spec.
1-1-12	Added SIDEWALK DIVERSION. Modified appearance of plan views. Renamed Std.

SIDEWALK, CORNER OR CROSSWALK CLOSURE (Sheet 1 of 2)

STANDARD 701801-06

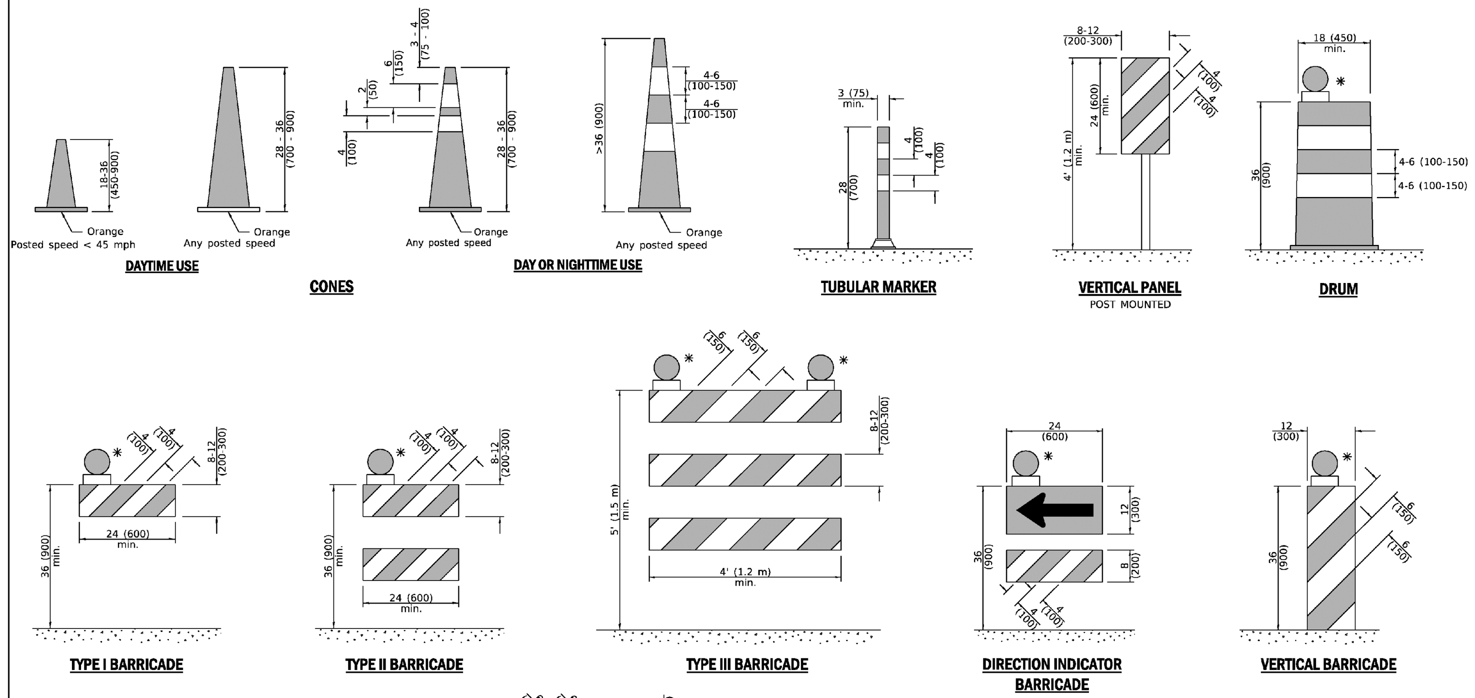

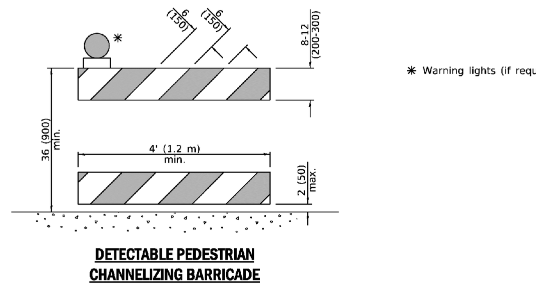

✳ Warning lights (if required)

GENERAL NOTES

All heights shown shall be measured above the pavement surface.

All dimensions are in inches (millimeters) unless otherwise shown.

Illinois Department of Transportation — APPROVED January 1, 2019 ENGINEER OF SAFETY PROG. AND ENGINEERING; APPROVED January 1, 2019 ENGINEER OF DESIGN AND ENVIRONMENT; ISSUED 1-1-13

DATE	REVISIONS
1-1-19	Revised cone usage and added cones >36" (900 m) height.
1-1-18	Revised END WORK ZONE SPEED LIMIT sign from orange to white background.

TRAFFIC CONTROL DEVICES (Sheet 1 of 3)

STANDARD 701901-08

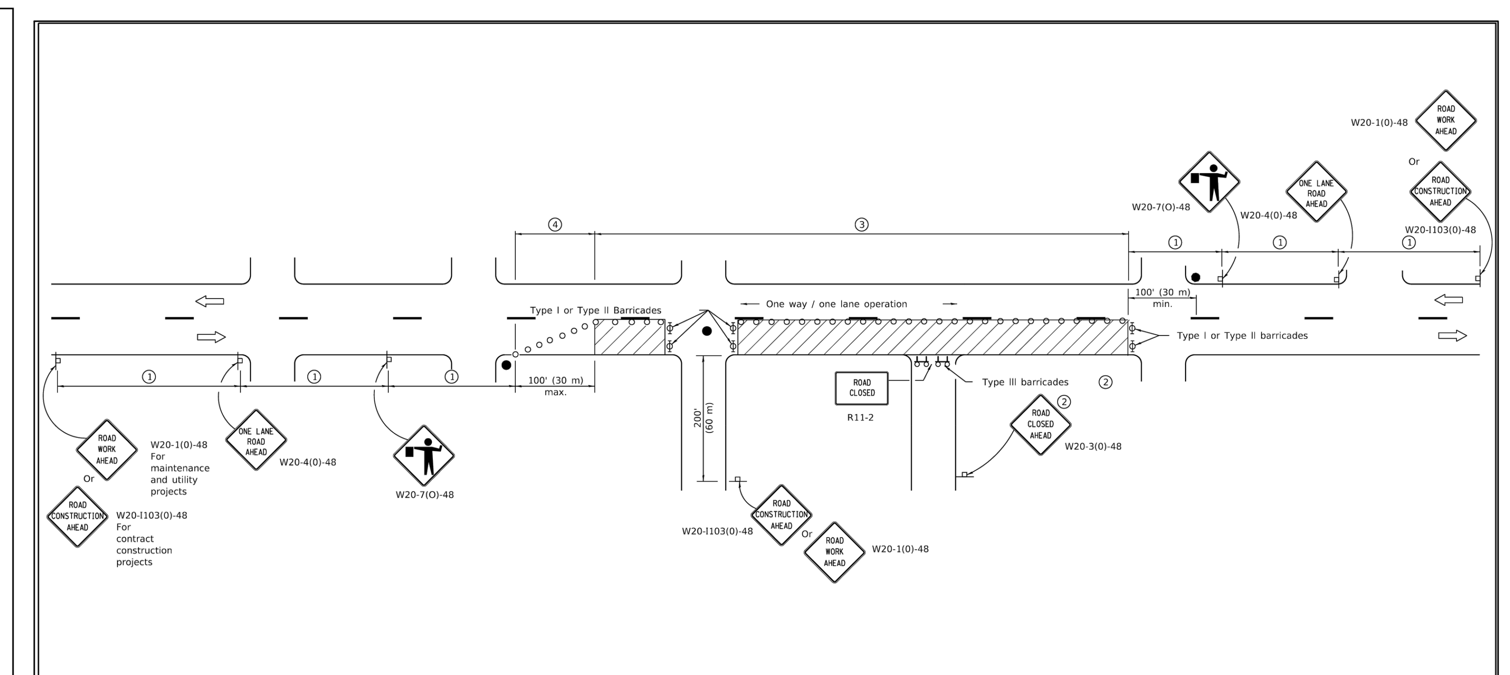

SIGN SPACING	
Posted Speed	Sign Spacing
55	500' (150 m)
50-45	350' (100 m)
<45	200' (60 m)

SYMBOLS

- Work area
- Cone, drum or barricade (not required for moving operations)
- Sign on portable or permanent support
- Flagger with traffic control sign
- Barricade or drum with flashing light
- Type III barricade with flashing lights

① Refer to SIGN SPACING TABLE for distances.

② For approved sideroad closures.

③ Cones at 25' (8 m) centers for 250' (75 m). Additional cones may be placed at 50' (15 m) centers. When drums or Type I or Type II barricades are used, the interval between devices may be doubled.

④ Cones, drums or barricades at 20' (6 m) centers.

GENERAL NOTES

This Standard is used where at any time, day or night, any vehicle, equipment, workers or their activities encroach on the pavement requiring the closure of one traffic lane in an urban area.

All dimensions are in inches (millimeters) unless otherwise shown.

Illinois Department of Transportation — PASSED January 1, 2011 ENGINEER OF SAFETY ENGINEERING; APPROVED January 1, 2011 ENGINEER OF DESIGN AND ENVIRONMENT; ISSUED 1-1-97

DATE	REVISIONS
1-1-11	Revised flagger sign.
1-1-09	Switched units to English (metric). Corrected sign No.'s.

URBAN LANE CLOSURE, 2L, 2W, UNDIVIDED

STANDARD 701501-06

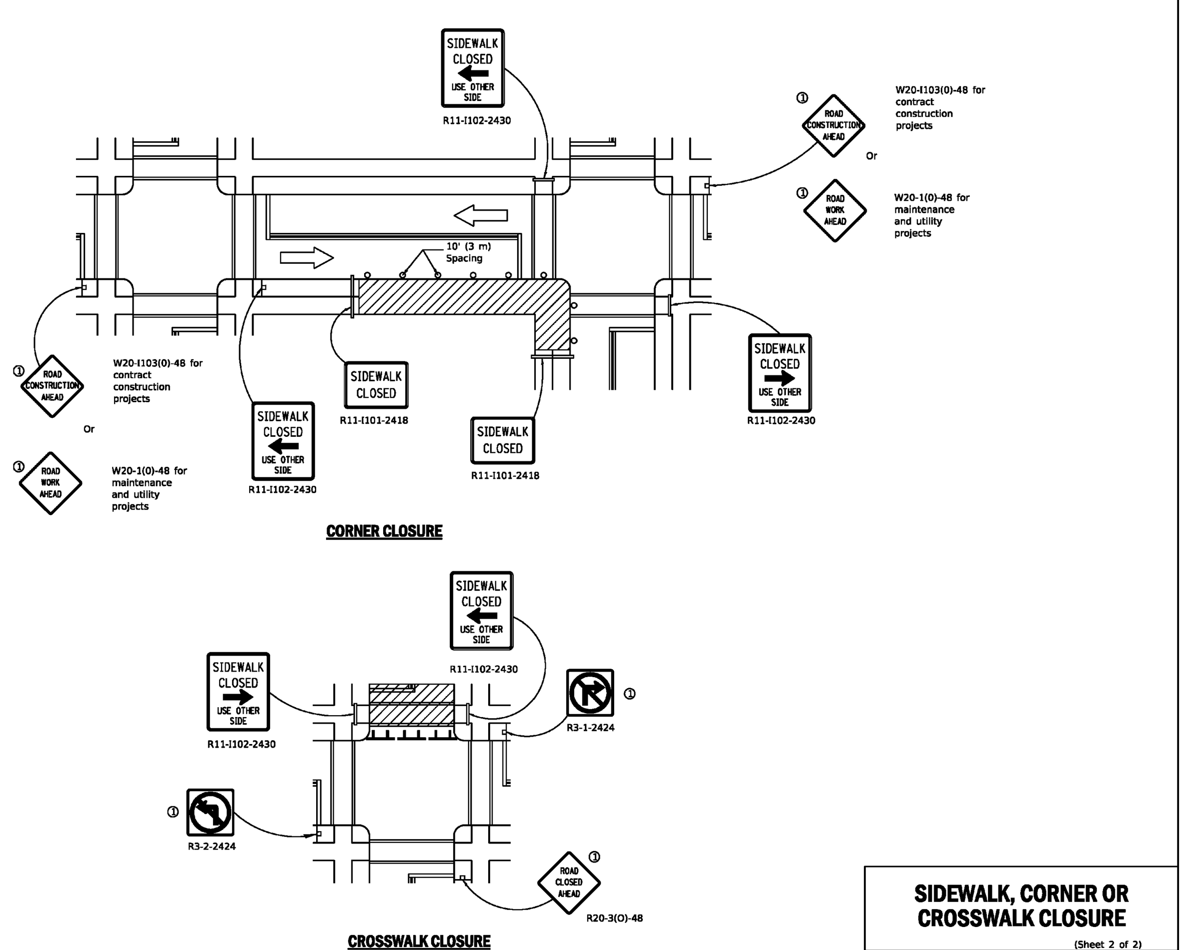

Illinois Department of Transportation — PASSED April 1, 2016 ENGINEER OF SAFETY ENGINEERING; APPROVED April 1, 2016 ENGINEER OF DESIGN AND ENVIRONMENT; ISSUED 1-1-97

SIDEWALK, CORNER OR CROSSWALK CLOSURE (Sheet 2 of 2)

STANDARD 701801-06

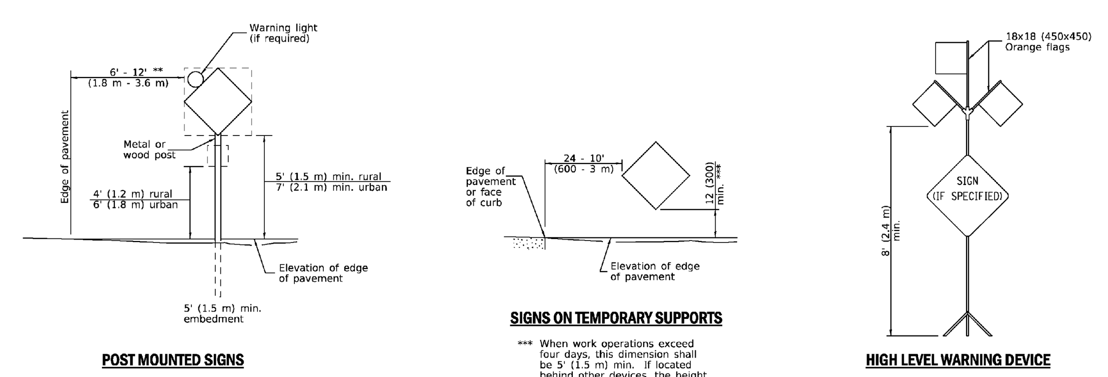

** When curb or paved shoulder are present this dimension shall be 24 (600) to the face of curb or 6' (1.8 m) to the outside edge of the paved shoulder.

*** When work operations exceed four days, this dimension shall be 5' (1.5 m) min. If located behind other devices, the height shall be sufficient to be seen completely above the devices.

ROAD CONSTRUCTION NEXT X MILES — G20-I104(0)-6036

END CONSTRUCTION — G20-I105(0)-6024

This signing is required for all projects 2 miles (3200 m) or more in length.

ROAD CONSTRUCTION NEXT X MILES sign shall be placed 500' (150 m) in advance of project limits.

END CONSTRUCTION sign shall be erected at the end of the job unless another job is within 2 miles (3200 m).

Dual sign displays shall be utilized on multi-lane highways.

WORK LIMIT SIGNING

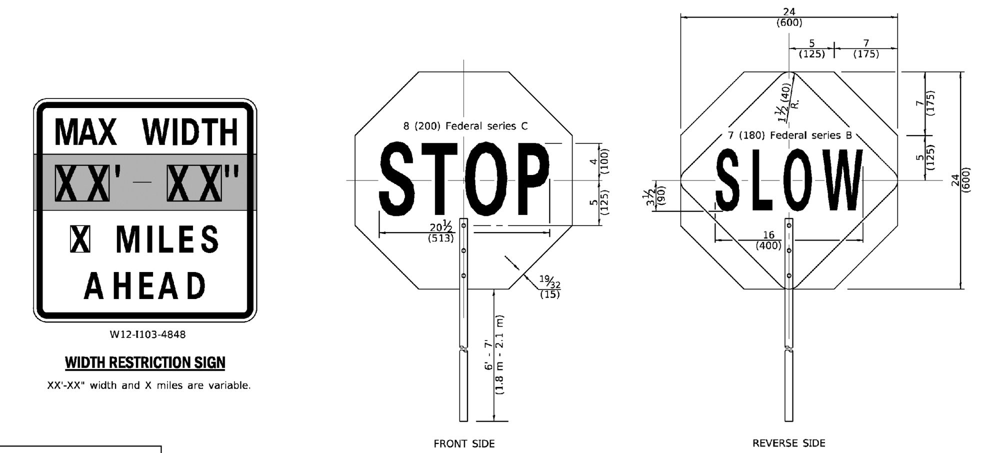

XX'-XX" width and X miles are variable.

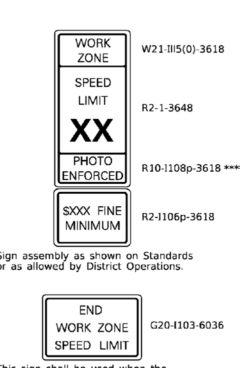

Sign assembly as shown on Standards or as allowed by District Operations.

This sign shall be used when the above sign assembly is used.

HIGHWAY CONSTRUCTION SPEED ZONE SIGNS

**** R10-I108p shall only be used along roadways under the juristiction of the State.

Illinois Department of Transportation — APPROVED January 1, 2019 ENGINEER OF SAFETY PROG. AND ENGINEERING; APPROVED January 1, 2019 ENGINEER OF DESIGN AND ENVIRONMENT; ISSUED 1-1-13

TRAFFIC CONTROL DEVICES (Sheet 2 of 3)

STANDARD 701901-08

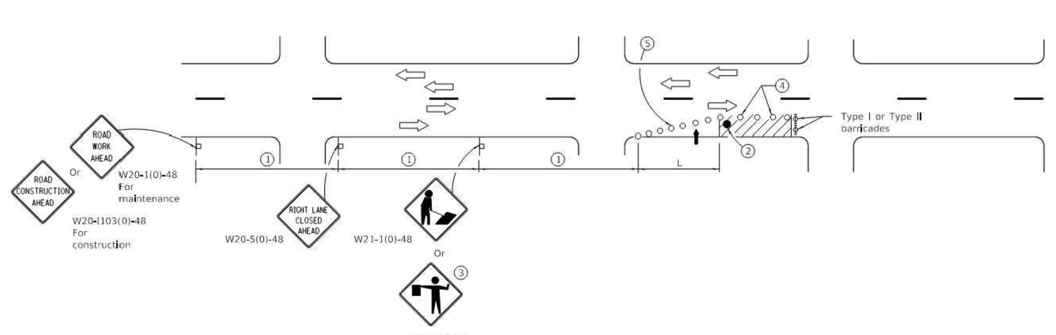

SIGN SPACING	
Posted Speed	Sign Spacing
55	500' (150 m)
50-45	350' (100 m)
<45	200' (60 m)

SYMBOLS

- Arrow board
- Cone, drum or barricade
- Sign on portable or permanent support
- Work area
- Barricade or drum with flashing light
- Flagger with traffic control sign.

① Refer to SIGN SPACING TABLE for distances.

② Required for speeds > 40 mph.

③ Use flagger sign only when flagger is present.

④ Cones at 25' (8 m) centers for 250' (75 m). Additional cones may be placed at 50' (15 m) centers. When drums or Type I or Type II barricades are used, the interval between devices may be doubled.

⑤ Cones, drums or barricades at 20' (6 m) centers in taper.

GENERAL NOTES

This Standard is used where at any time, day or night, any vehicle, equipment, workers or their activities encroach on the pavement requiring the closure of one traffic lane in an Urban area.

Calculate L as follows:

SPEED LIMIT	FORMULAS English	(Metric)
40 mph (70 km/h) or less:	$L=\frac{WS^2}{60}$	$L=\frac{WS^2}{150}$
45 mph (80 km/h) or greater:	L=(W)(S)	L=0.65(W)(S)

W = Width of offset in feet (meters).

S = Normal posted speed mph (km/h).

All dimensions are in inches (millimeters) unless otherwise shown.

Illinois Department of Transportation — PASSED January 1, 2015 ENGINEER OF SAFETY ENGINEERING; APPROVED January 1, 2015 ENGINEER OF DESIGN AND ENVIRONMENT; ISSUED 1-1-97

DATE	REVISIONS
1-1-15	Renamed standard. Moved case on Sheet 2 to new Highway Standard.
1-1-14	Revised workers sign number to agree with current MUTCD.

URBAN SINGLE LANE CLOSURE, MULTILANE, 2W WITH MOUNTABLE MEDIAN

STANDARD 701606-10

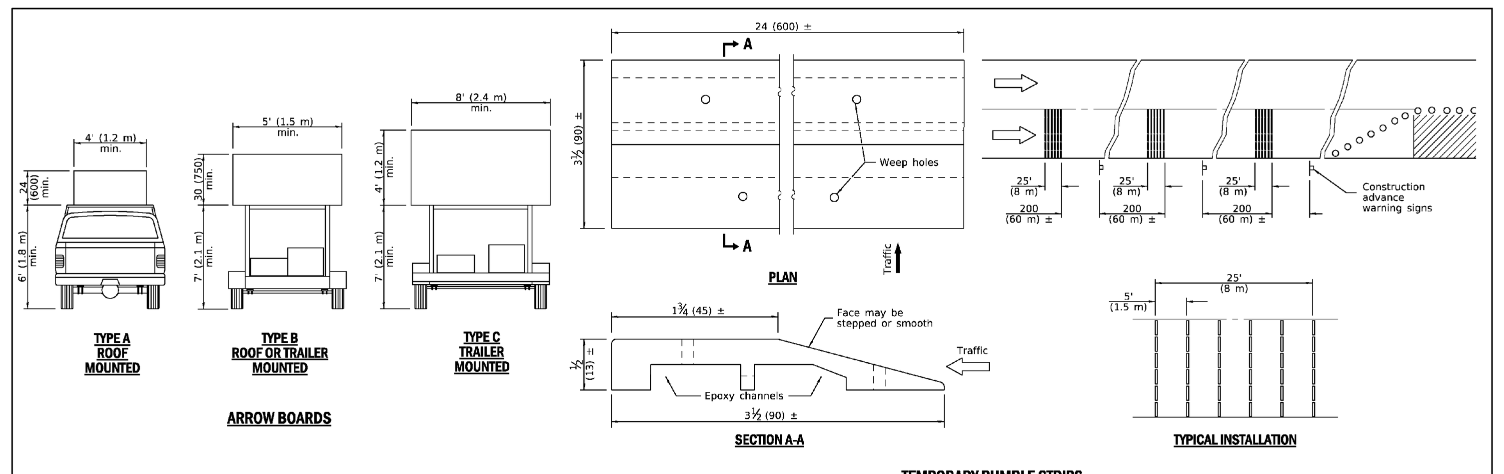

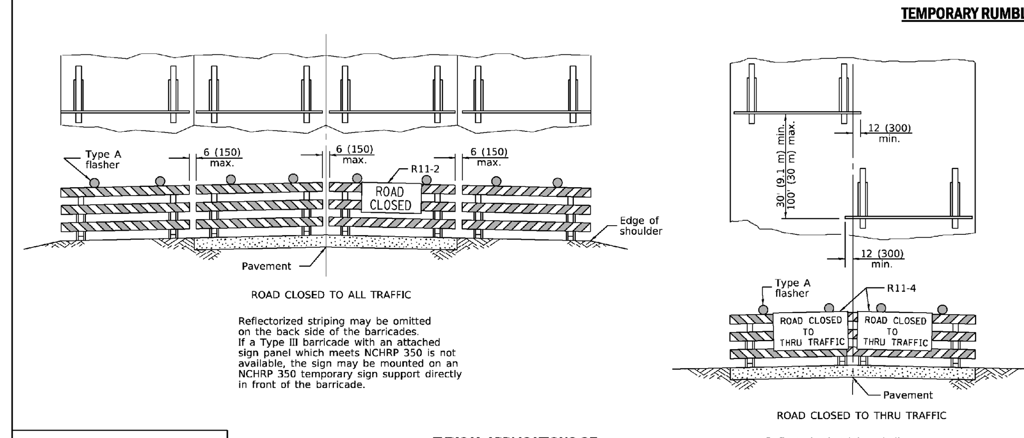

Reflectorized striping may be omitted on the back side of the barricades. If a Type III barricade with an attached sign panel which meets NCHRP 350 is not available, the sign may be mounted on an NCHRP 350 temporary sign support directly in front of the barricade.

TYPICAL APPLICATIONS OF TYPE III BARRICADES CLOSING A ROAD

Reflectorized striping shall appear on both sides of the barricades. If a Type III barricade with an attached sign panel which meets NCHRP 350 is not available, the signs may be mounted on an NCHRP 350 temporary sign supports directly in front of the barricade.

Illinois Department of Transportation — APPROVED January 1, 2019 ENGINEER OF SAFETY PROG. AND ENGINEERING; APPROVED January 1, 2019 ENGINEER OF DESIGN AND ENVIRONMENT; ISSUED 1-1-13

TRAFFIC CONTROL DEVICES (Sheet 3 of 3)

STANDARD 701901-08

REVISION RECORD

NO	DATE	DESCRIPTION
1	01/19/2026	NO REVISIONS THIS SHEET
2	03/17/2026	NO REVISIONS THIS SHEET
3	04/27/2026	NO REVISIONS THIS SHEET

ENGINEERING, SURVEYING AND LANDSCAPE ARCHITECTURE IN THE STATE OF NORTH CAROLINA WILL BE PROVIDED BY CEC SURVEYING AND LANDSCAPE ARCHITECTS OF NC, PLLC. SERVICES IN PUERTO RICO WILL BE PROVIDED BY CEC ENGINEERS & CONSULTANTS, LLC. LANDSCAPE ARCHITECTURE SERVICES IN THE STATE OF OHIO WILL BE PROVIDED BY CEC LANDSCAPE ARCHITECTS, LLC.

Civil & Environmental Consultants, Inc.
1230 East Diehl Road
Suite 200
Naperville, IL 60563
Ph: 630.963.6026
www.cecinc.com

REDSTART CONSTRUCTION, INC.
BAUER ROAD DUPLEXES
27W240 BAUER ROAD
NAPERVILLE, ILLINOIS 60563

DETAILS - 3

DATE:	OCTOBER 21, 2025	DRAWN BY:	ET
DWG SCALE:	NOT TO SCALE	CHECKED BY:	MAJ
PROJECT NO:	347-703		
APPROVED BY:	*JGC		

DRAWING NO.: **C802**

SHEET 12 OF 12

P:\340-000\347-703\-CADD\Dwg\CV01-FINAL ENGINEERING\347703-CV01-C800.dwg{C802} LS:(4/27/2026 - etrebicka) - LP: 4/27/2026 12:33 PM

EXHIBIT E

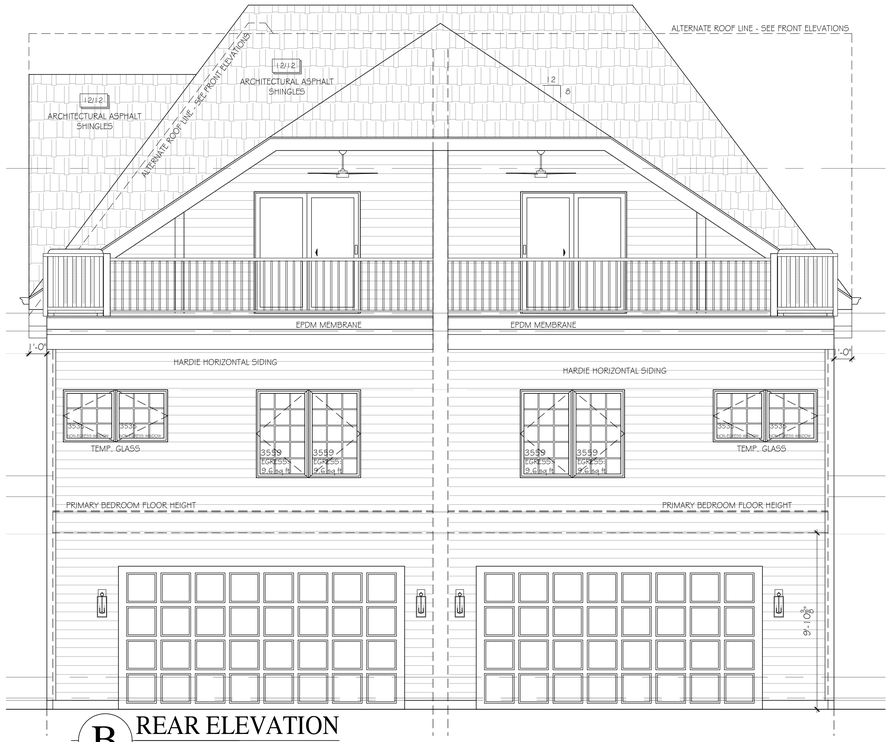

B REAR ELEVATION
SCALE: 1/4" = 1'-0"

A RIGHT ELEVATION 'A'
SCALE: 1/4" = 1'-0"

A LEFT ELEVATION 'A'
SCALE: 1/4" = 1'-0"

A FRONT ELEVATION 'A'
SCALE: 1/4" = 1'-0"

EXHIBIT F

REDSTART
design · build · live
(630) 305 8230
109 W. JEFFERSON AVENUE
NAPERVILLE, IL

MEYER DESIGN
630.389.0594
INFO@MEYERDESIGN.NET

© COPYRIGHT 2026
MEYER DESIGN
ALL RIGHTS RESERVED.
This document is an instrument of service for use with respect to this project and is the sole property of Meyer Design. It may not be copied, reproduced, altered or reused in whole or in part without the express written permission of Meyer Design.

CLIENT:
Mill & Bauer Duplex
Naperville, Illinois

PROJECT NO:
MD25-167

DATE:	DESCRIPTION:
10-16-2025	SCHEMATIC DESIGN
11-10-2025	DESIGN DEVELOPMENT
12-19-2025	DESIGN DEVELOPMENT
3-20-2026	DESIGN DEVELOPMENT
5-1-2026	DESIGN DEVELOPMENT
6-1-2026	DESIGN DEVELOPMENT
6-24-2026	DESIGN DEVELOPMENT
6-30-2026	DESIGN DEVELOPMENT
7-1-2026	DESIGN DEVELOPMENT
7-8-2026	DESIGN DEVELOPMENT

SHEET NO:
A1

C RIGHT ELEVATION 'B'
SCALE: 1/4" = 1'-0"

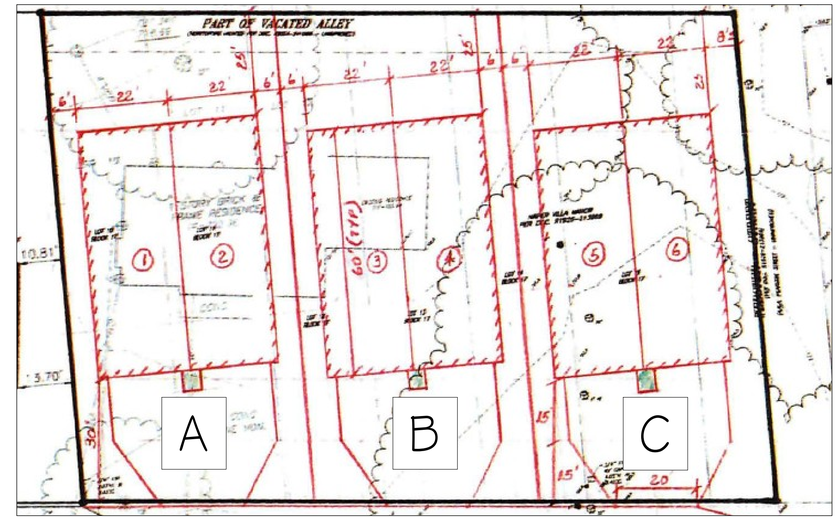

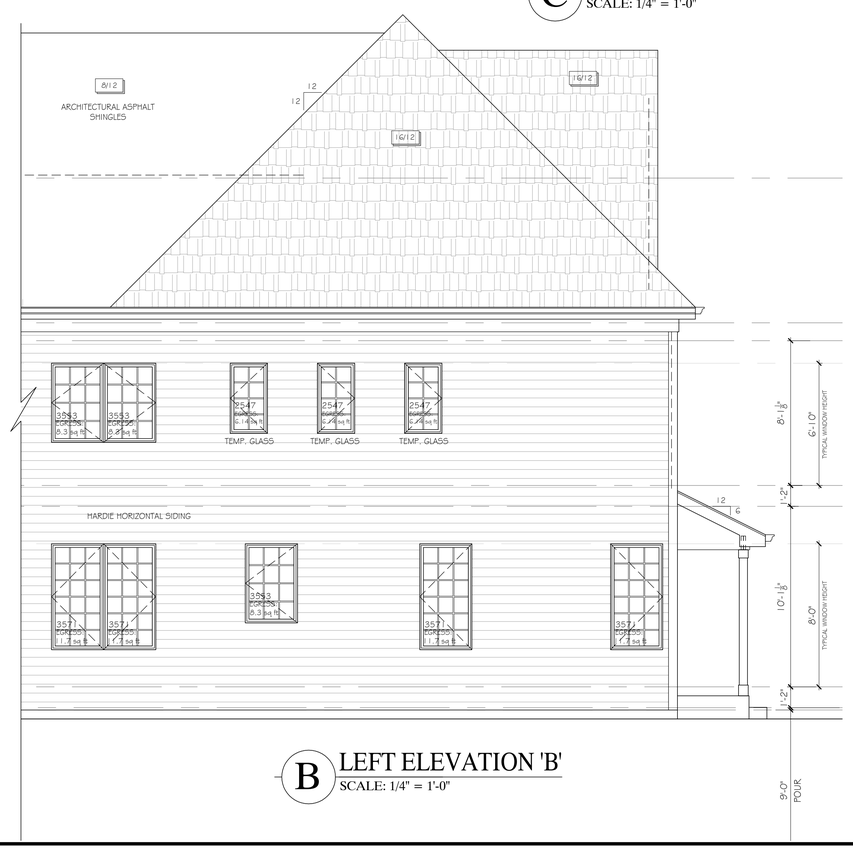

B LEFT ELEVATION 'B'
SCALE: 1/4" = 1'-0"

A FRONT ELEVATION 'B'
SCALE: 1/4" = 1'-0"

EXHIBIT F

REDSTART
design · build · live
(630) 305 8230
109 W. JEFFERSON AVENUE
NAPERVILLE, IL

MEYER DESIGN
630.389.0594
INFO@MEYERDESIGN.NET

© COPYRIGHT 2026
MEYER DESIGN
ALL RIGHTS RESERVED.
This document is an instrument of service for use with respect to this project and is the sole property of Meyer Design. It may not be copied, reproduced, altered or reused in whole or in part without the express written permission of Meyer Design.

CLIENT:
Mill & Bauer Duplex
Naperville, Illinois

PROJECT NO:
MD25-167

DATE:	DESCRIPTION:
10-16-2025	SCHEMATIC DESIGN
11-10-2025	DESIGN DEVELOPMENT
12-19-2025	DESIGN DEVELOPMENT
3-30-2026	DESIGN DEVELOPMENT
5-1-2026	DESIGN DEVELOPMENT
6-1-2026	DESIGN DEVELOPMENT
6-24-2026	DESIGN DEVELOPMENT
6-30-2026	DESIGN DEVELOPMENT
7-1-2026	DESIGN DEVELOPMENT
7-8-2026	DESIGN DEVELOPMENT

SHEET NO:
A2

C RIGHT ELEVATION 'C'
SCALE: 1/4" = 1'-0"

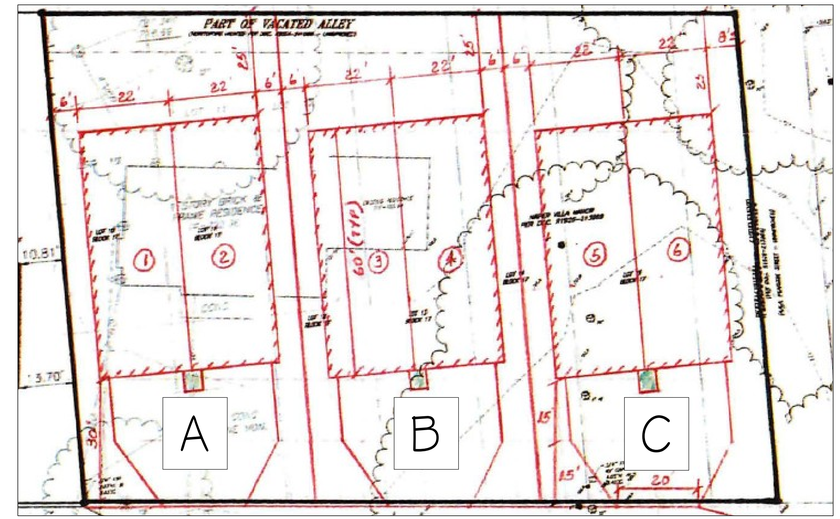

C LEFT ELEVATION 'C'
SCALE: 1/4" = 1'-0"

B FRONT ELEVATION 'C'
SCALE: 1/4" = 1'-0"

EXHIBIT F

REDSTART
design · build · live
(630) 305 8230
109 W. JEFFERSON AVENUE
NAPERVILLE, IL

MEYER DESIGN
630.389.0594
INFO@MEYERDESIGN.NET

© COPYRIGHT 2026
MEYER DESIGN
ALL RIGHTS RESERVED.
This document is an instrument of service for use with respect to this project and is the sole property of Meyer Design. It may not be copied, reproduced, altered or reused in whole or in part without the express written permission of Meyer Design.

CLIENT:
Mill & Bauer Duplex
Naperville, Illinois

PROJECT NO:
MD25-167

DATE:	DESCRIPTION:
10-16-2025	SCHEMATIC DESIGN
11-10-2025	DESIGN DEVELOPMENT
12-19-2025	DESIGN DEVELOPMENT
3-20-2026	DESIGN DEVELOPMENT
5-1-2026	DESIGN DEVELOPMENT
6-1-2026	DESIGN DEVELOPMENT
6-30-2026	DESIGN DEVELOPMENT
7-1-2026	DESIGN DEVELOPMENT
7-8-2026	DESIGN DEVELOPMENT

SHEET NO:
A3

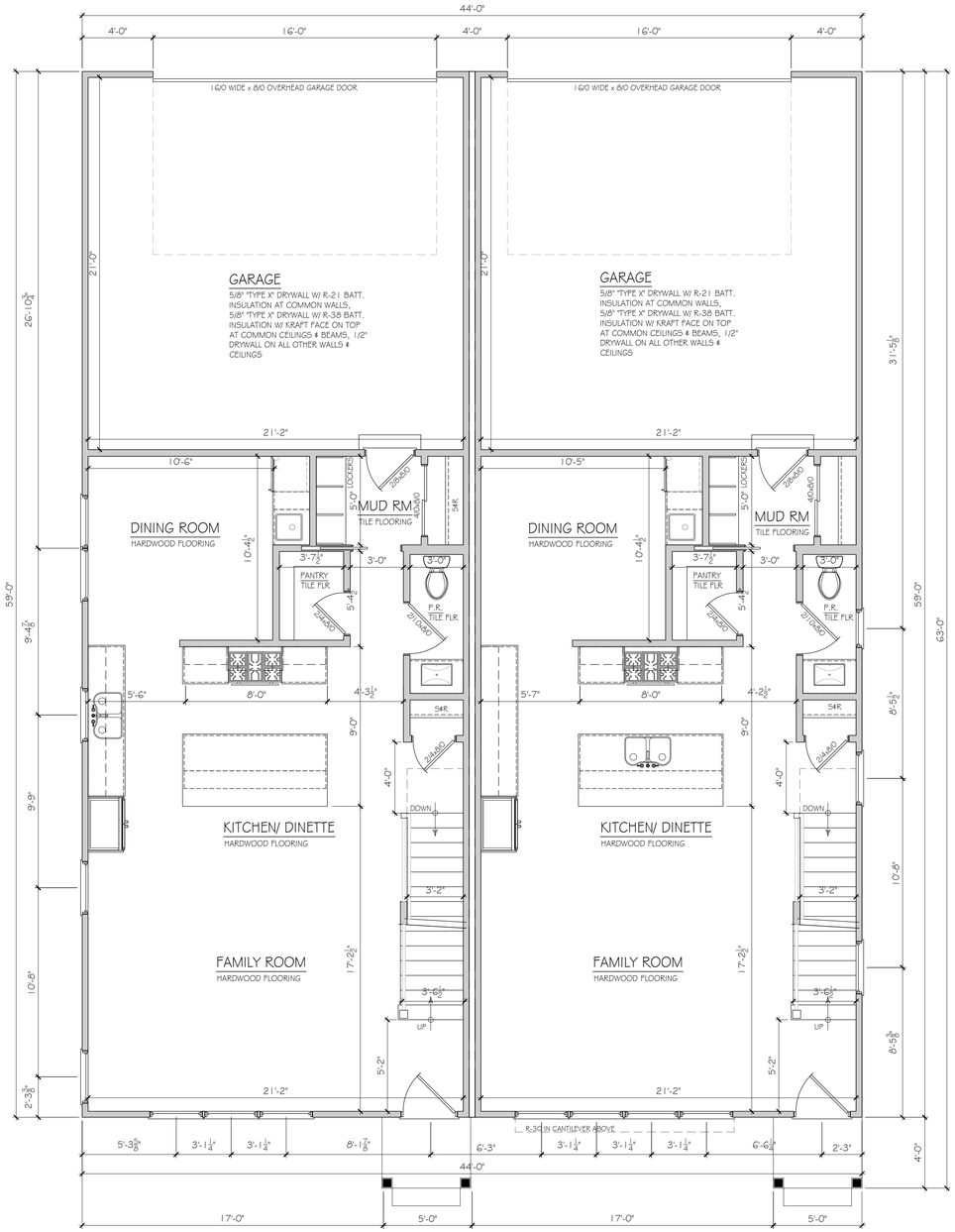

B FIRST FLOOR PLAN 'B'
SCALE: 1/4" = 1'-0"

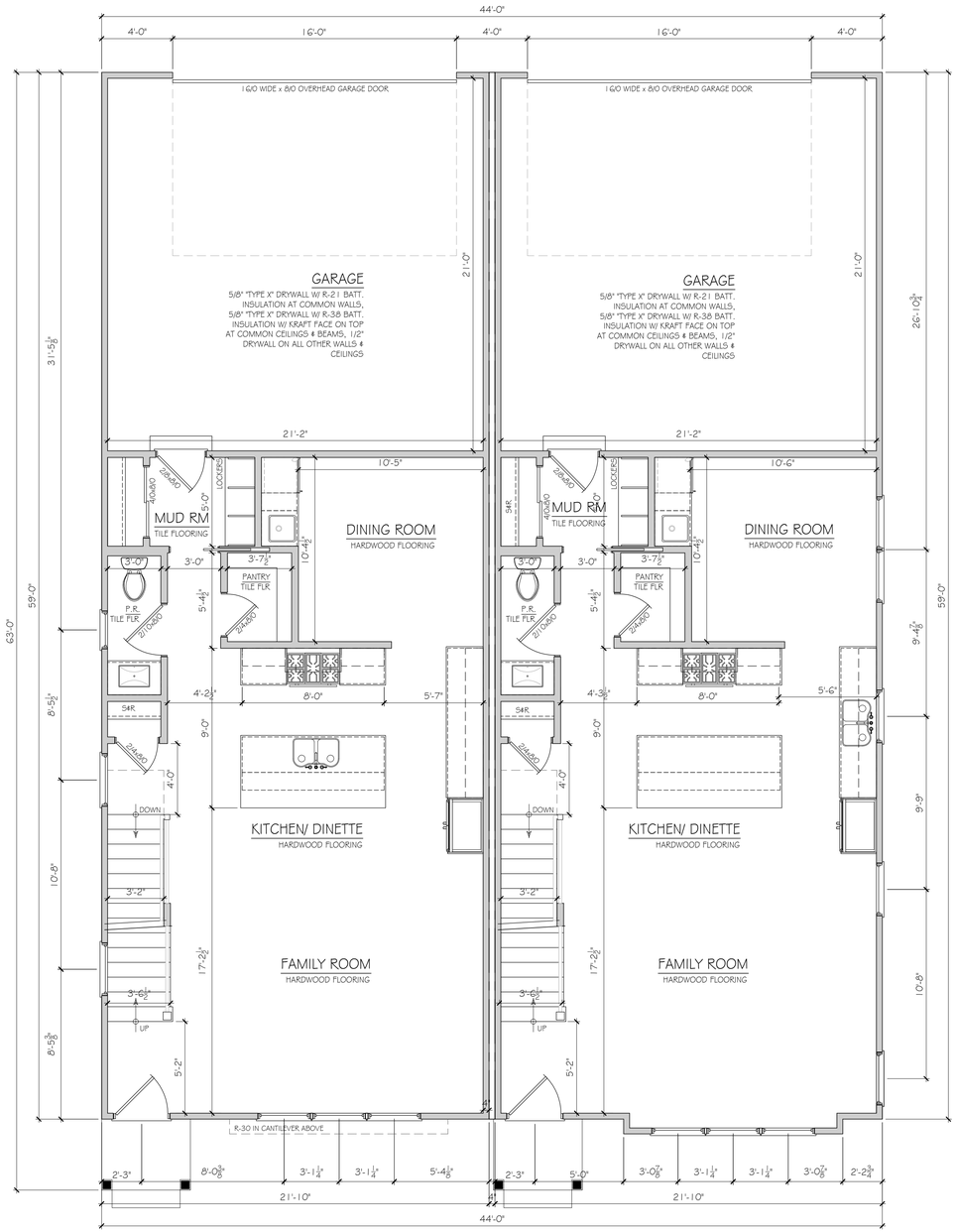

A FIRST FLOOR PLAN 'A'
SCALE: 1/4" = 1'-0"

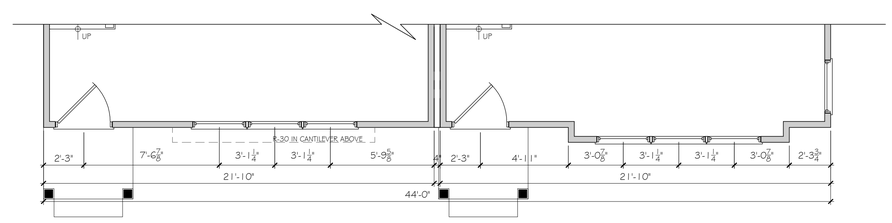

C FIRST FLOOR PLAN 'C'
SCALE: 1/4" = 1'-0"

EXHIBIT F

REDSTART
design · build · live
(630) 305 8230
109 W. JEFFERSON AVENUE
NAPERVILLE, IL

MEYER DESIGN
630.389.0594
INFO@MEYERDESIGN.NET

© COPYRIGHT 2026
MEYER DESIGN
ALL RIGHTS RESERVED.
This document is an instrument of service for use with respect to this project and is the sole property of Meyer Design. It may not be copied, reproduced, altered or reused in whole or in part without the express written permission of Meyer Design.

CLIENT:
Mill & Bauer Duplex
Naperville, Illinois

PROJECT NO:
MD25-167

DATE:	DESCRIPTION:
10-16-2025	SCHEMATIC DESIGN
11-10-2025	DESIGN DEVELOPMENT
12-19-2025	DESIGN DEVELOPMENT
3-20-2026	DESIGN DEVELOPMENT
5-1-2026	DESIGN DEVELOPMENT
6-1-2026	DESIGN DEVELOPMENT
6-8-2026	DESIGN DEVELOPMENT
6-30-2026	DESIGN DEVELOPMENT
7-1-2026	DESIGN DEVELOPMENT
7-8-2026	DESIGN DEVELOPMENT

SHEET NO:
A4

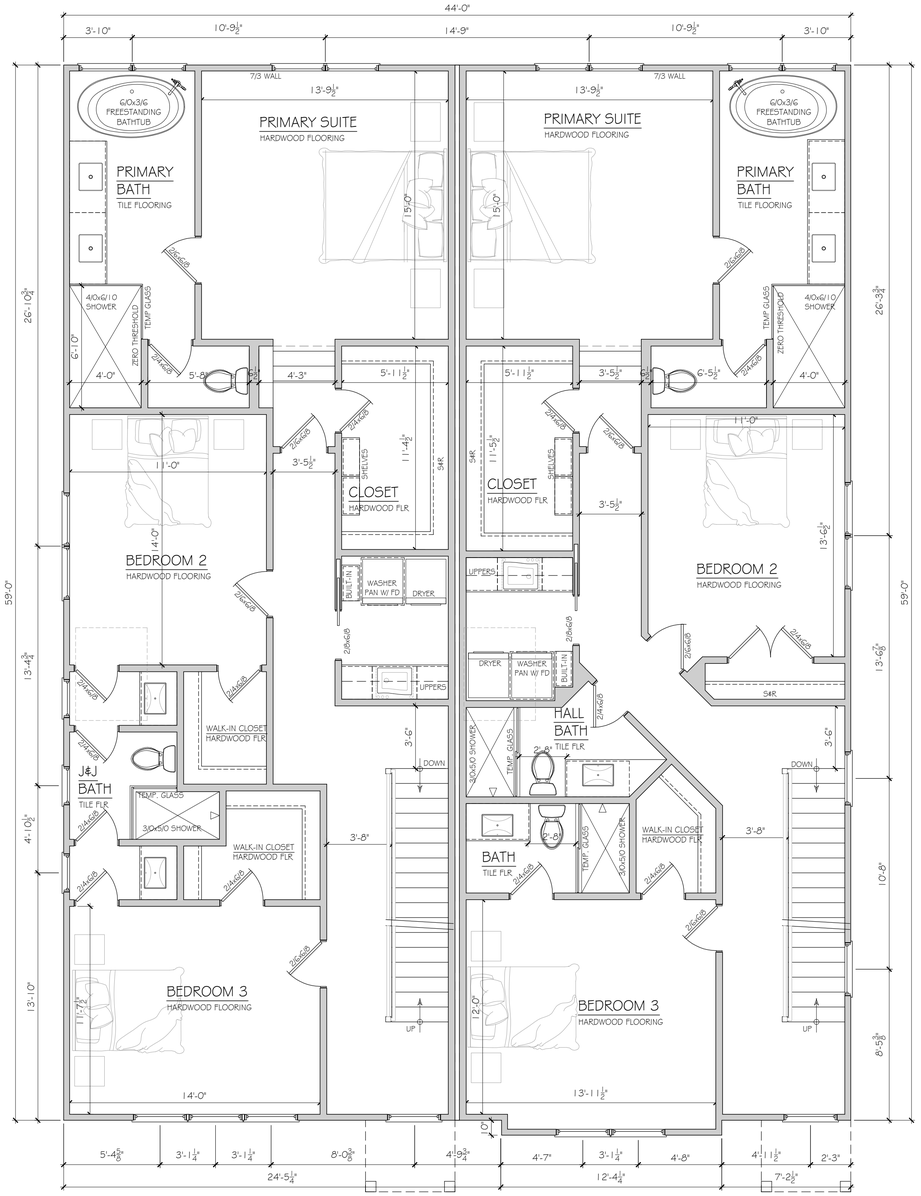

B SECOND FLOOR PLAN 'B'
SCALE: 1/4" = 1'-0"

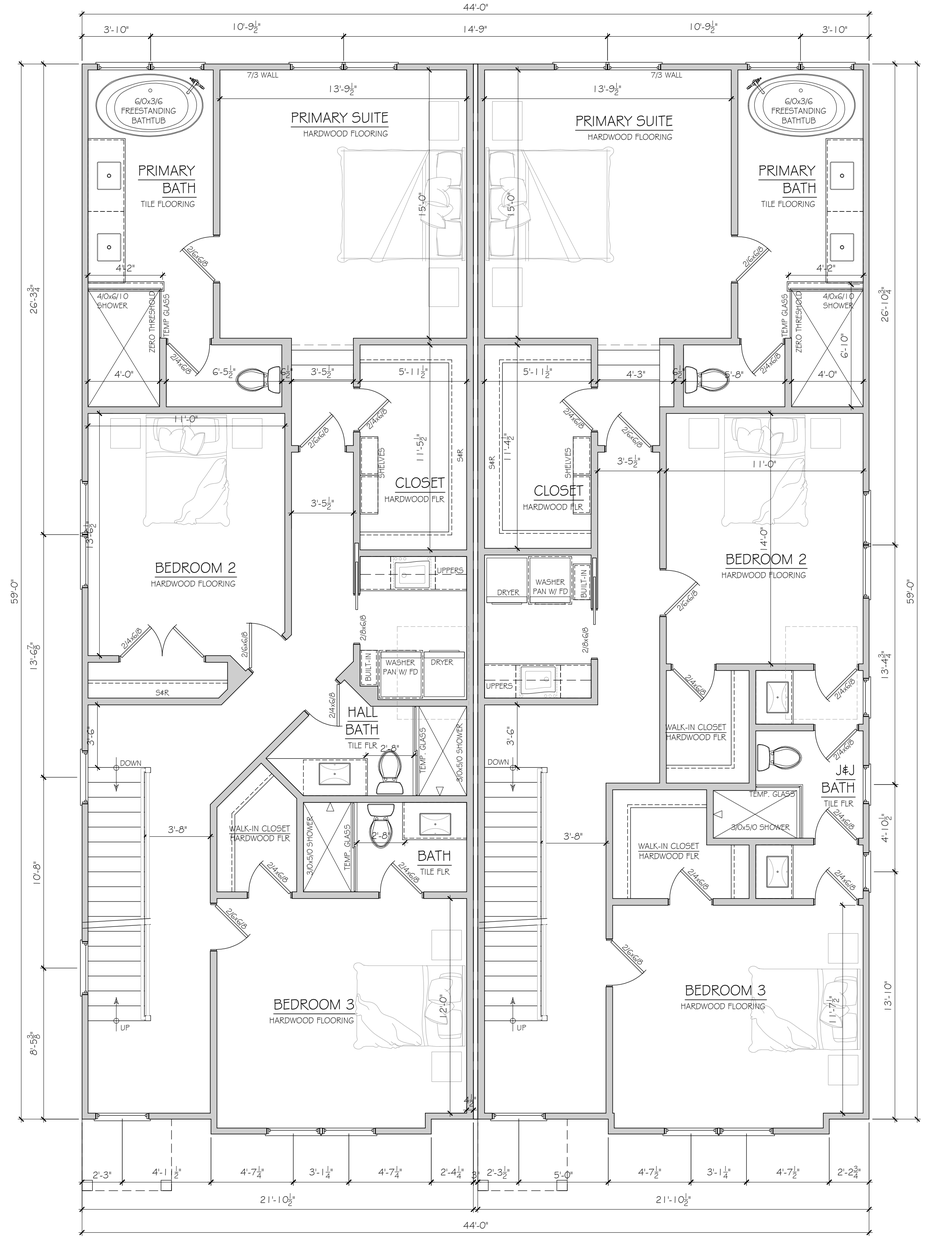

A SECOND FLOOR PLAN 'A'
SCALE: 1/4" = 1'-0"

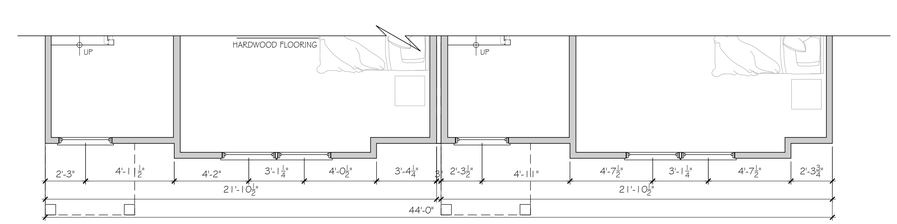

C SECOND FLOOR PLAN 'C'
SCALE: 1/4" = 1'-0"

EXHIBIT F

REDSTART
design · build · live
(630) 305 8230
109 W. JEFFERSON AVENUE
NAPERVILLE, IL

MEYER DESIGN
630.389.0594
INFO@MEYERDESIGN.NET

© COPYRIGHT 2026
MEYER DESIGN
ALL RIGHTS RESERVED.
This document is an instrument of service for use with respect to this project and is the sole property of Meyer Design. It may not be copied, reproduced, altered or reused in whole or in part without the express written permission of Meyer Design.

CLIENT:
Mill & Bauer Duplex
Naperville, Illinois

PROJECT NO:
MD25-167

DATE:	DESCRIPTION:
10-16-2025	SCHEMATIC DESIGN
11-10-2025	DESIGN DEVELOPMENT
12-19-2025	DESIGN DEVELOPMENT
3-20-2026	DESIGN DEVELOPMENT
5-1-2026	DESIGN DEVELOPMENT
6-1-2026	DESIGN DEVELOPMENT
6-30-2026	DESIGN DEVELOPMENT
7-1-2026	DESIGN DEVELOPMENT
7-8-2026	DESIGN DEVELOPMENT

SHEET NO:
A5

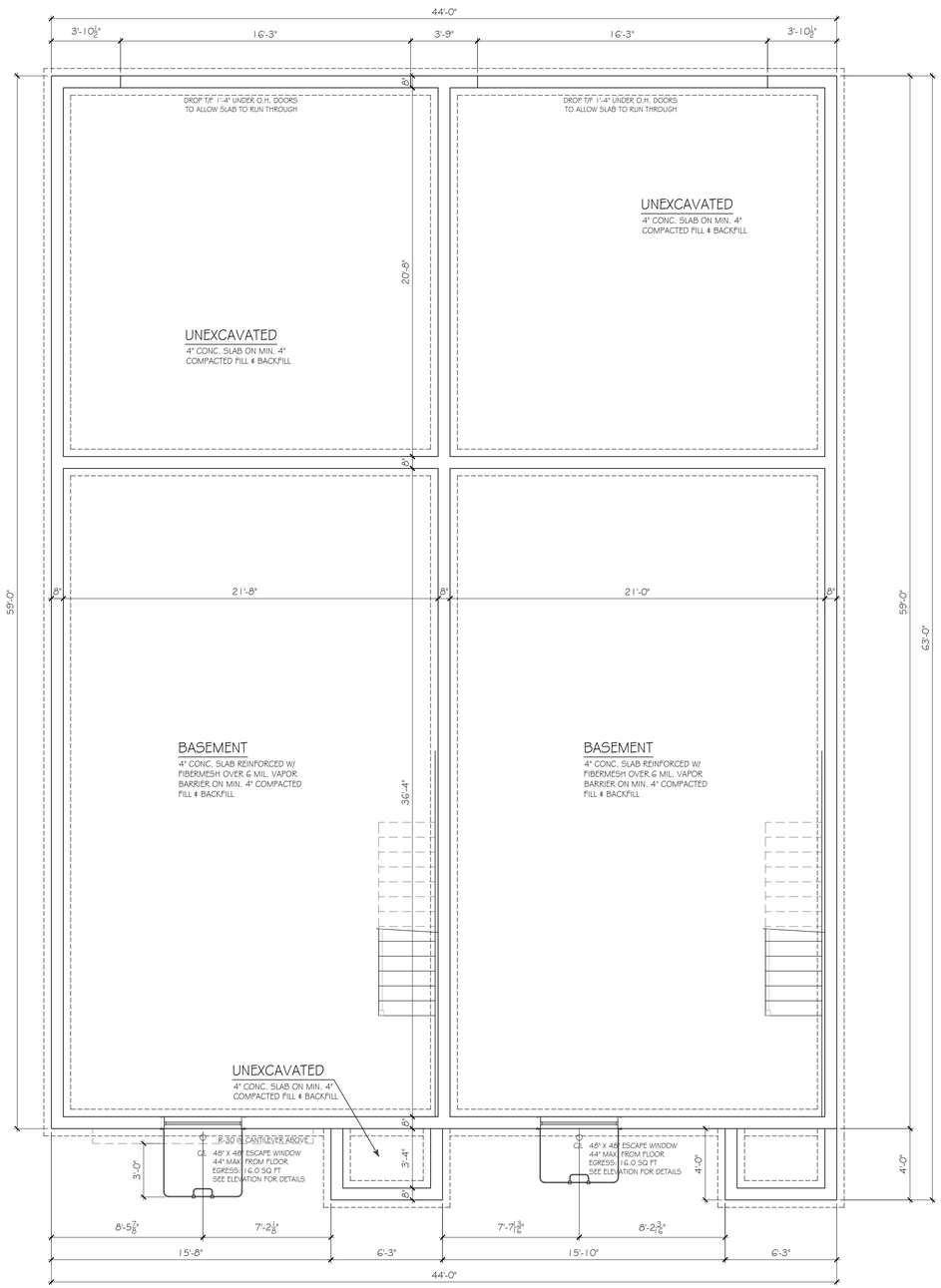

B FOUNDATION PLAN 'B'
SCALE: 1/4" = 1'-0"

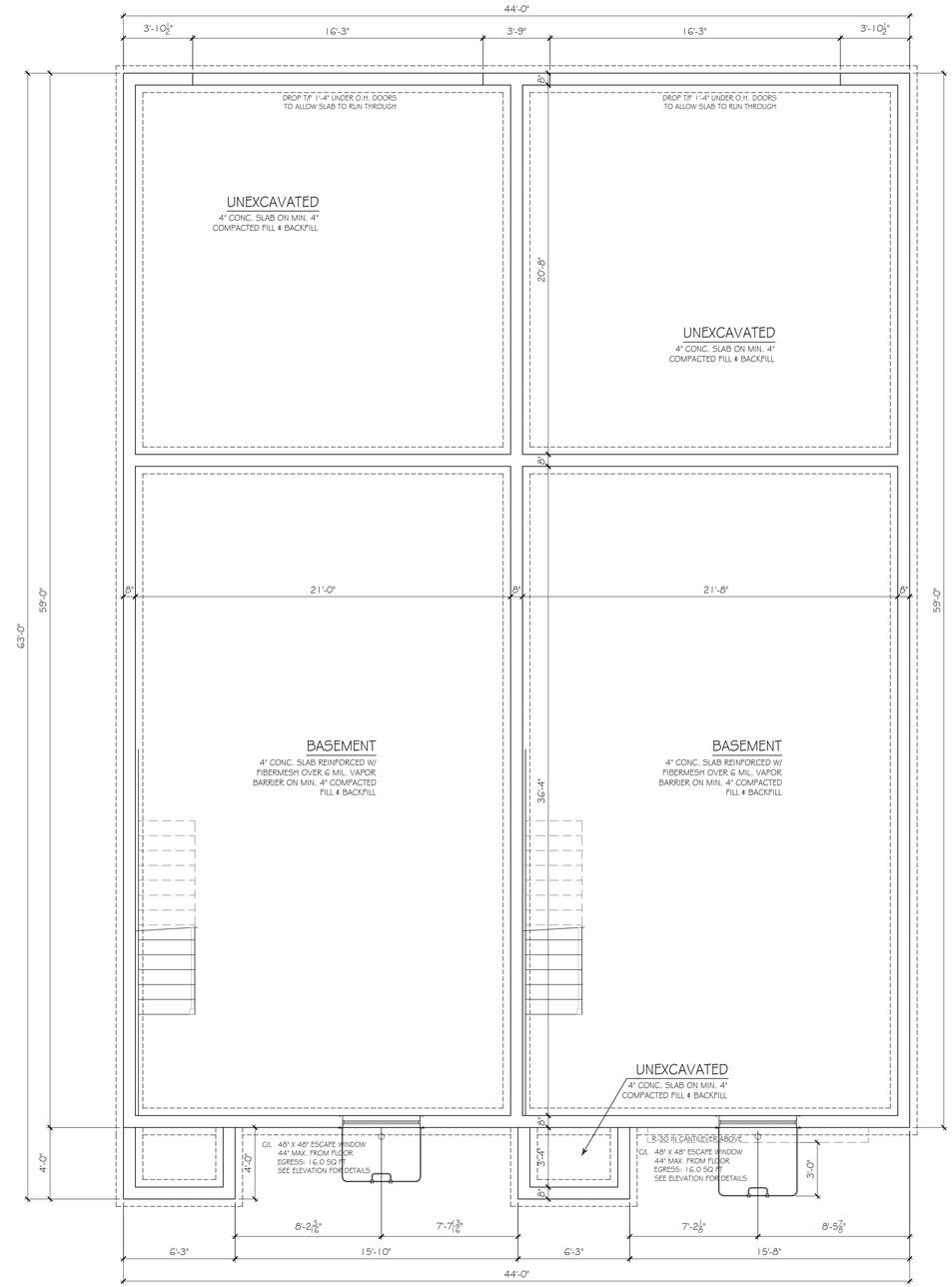

A FOUNDATION PLAN 'A' AND 'C'
SCALE: 1/4" = 1'-0"

EXHIBIT F

REDSTART
design · build · live
(630) 305 8230
109 W. JEFFERSON AVENUE
NAPERVILLE, IL

MEYER DESIGN
630.389.0594
INFO@MEYERDESIGN.NET

© COPYRIGHT 2026
MEYER DESIGN
ALL RIGHTS RESERVED.
This document is an instrument of service for use with respect to this project and is the sole property of Meyer Design. It may not be copied, reproduced, altered or reused in whole or in part without the express written permission of Meyer Design.

CLIENT:
Mill & Bauer Duplex
Naperville, Illinois

PROJECT NO:
MD25-167

DATE:	DESCRIPTION:
10-16-2025	SCHEMATIC DESIGN
11-10-2025	DESIGN DEVELOPMENT
12-19-2025	DESIGN DEVELOPMENT
3-20-2026	DESIGN DEVELOPMENT
5-1-2026	DESIGN DEVELOPMENT
6-1-2026	DESIGN DEVELOPMENT
6-26-2026	DESIGN DEVELOPMENT
6-30-2026	DESIGN DEVELOPMENT
7-1-2026	DESIGN DEVELOPMENT
7-8-2026	DESIGN DEVELOPMENT

SHEET NO:
A6

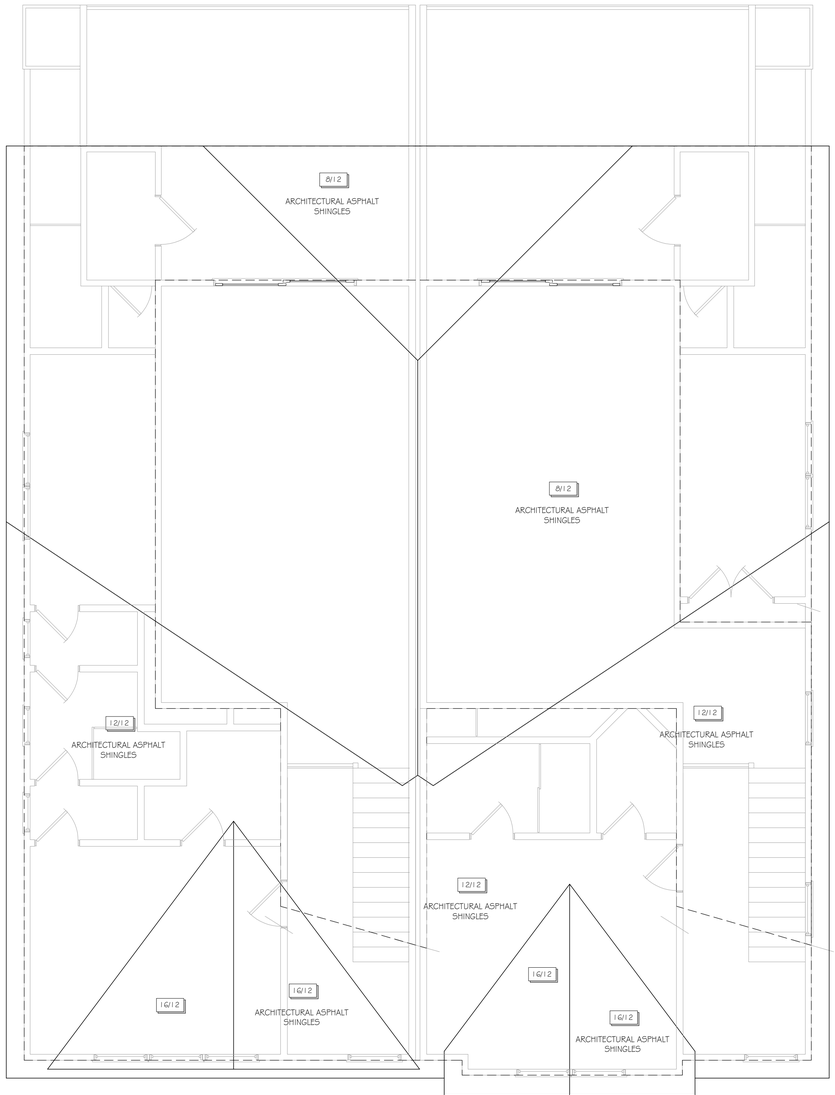

D ROOF PLAN
SCALE: 1/4" = 1'-0"

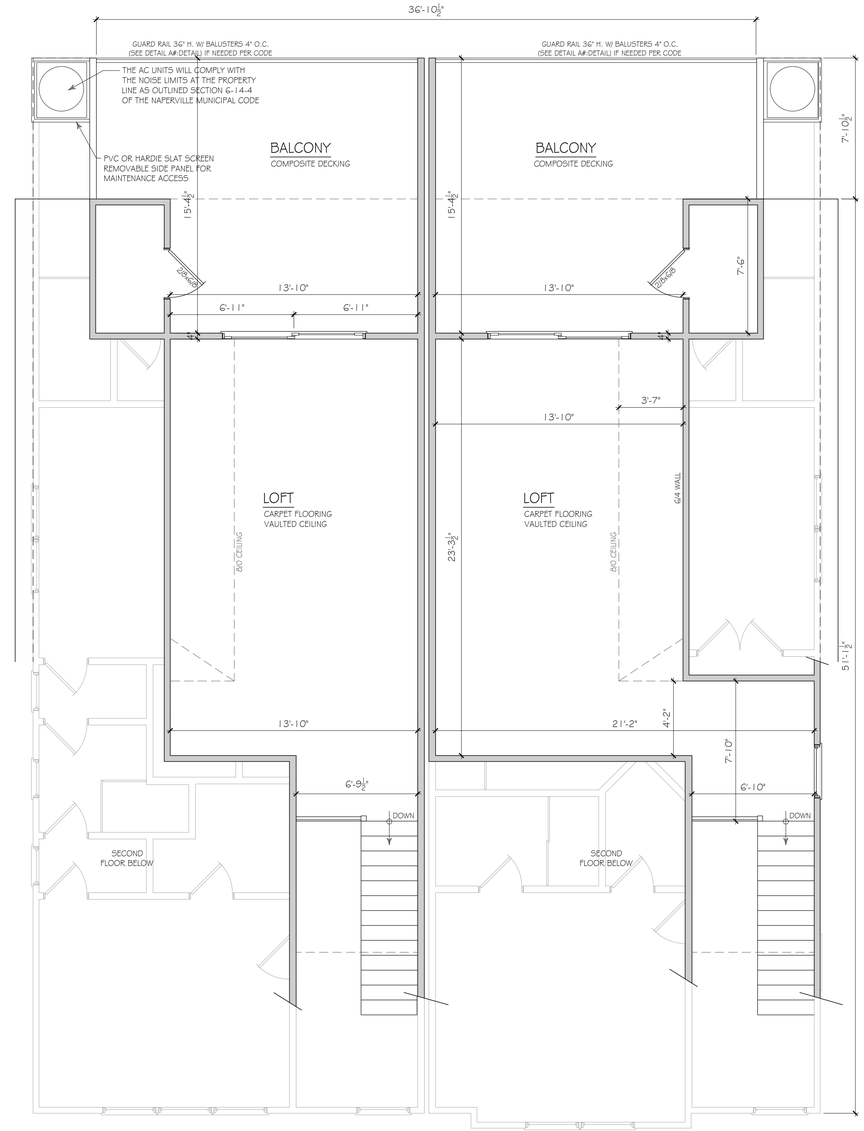

A THIRD FLOOR LOFT PLAN 'A'
SCALE: 1/4" = 1'-0"

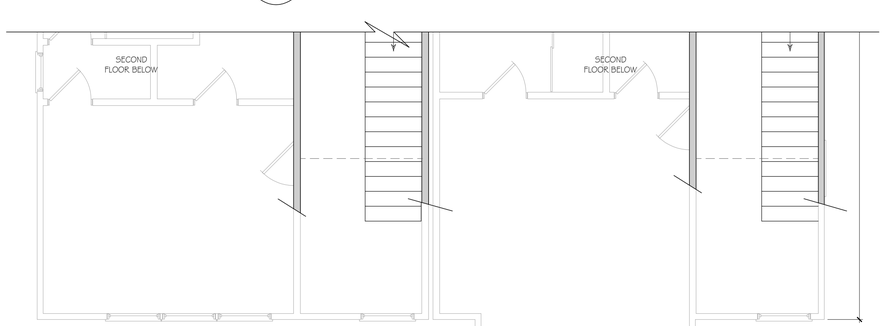

C THIRD FLOOR LOFT PLAN 'C'
SCALE: 1/4" = 1'-0"

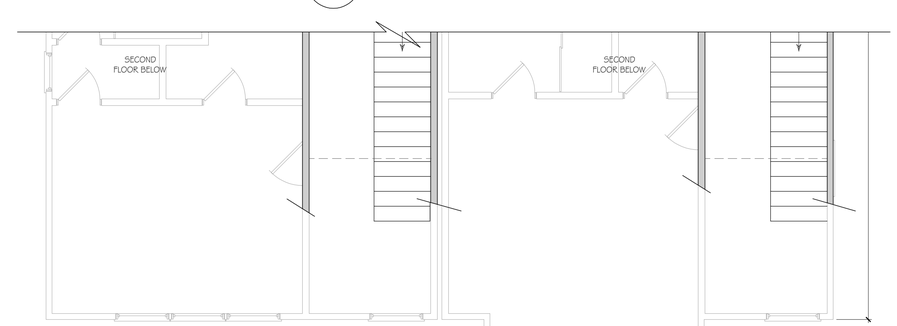

B THIRD FLOOR LOFT PLAN 'B'
SCALE: 1/4" = 1'-0"

EXHIBIT F

REDSTART
design · build · live
(630) 305 8230
109 W. JEFFERSON AVENUE
NAPERVILLE, IL

MEYER DESIGN
630.389.0594
INFO@MEYERDESIGN.NET

© COPYRIGHT 2026
MEYER DESIGN
ALL RIGHTS RESERVED.
This document is an instrument of service for use with respect to this project and is the sole property of Meyer Design. It may not be copied, reproduced, altered or reused in whole or in part without the express written permission of Meyer Design.

CLIENT:
Mill & Bauer Duplex
Naperville, Illinois

PROJECT NO:
MD25-167

DATE:	DESCRIPTION:
10-16-2025	SCHEMATIC DESIGN
11-10-2025	DESIGN DEVELOPMENT
12-19-2025	DESIGN DEVELOPMENT
3-20-2026	DESIGN DEVELOPMENT
5-1-2026	DESIGN DEVELOPMENT
6-5-2026	DESIGN DEVELOPMENT
6-30-2026	DESIGN DEVELOPMENT
7-1-2026	DESIGN DEVELOPMENT
7-8-2026	DESIGN DEVELOPMENT

SHEET NO:
A7

Monterey Taupe

Light Mist

Timber Bark

Navajo Beige

Mountain Sage

Cobble Stone

JAMES HARDIE LIGHT MIST
*STANDARD STATEMENT COLLECTION COLOR

JAMES HARDIE MONTEREY TAUPE
*STANDARD STATEMENT COLLECTION COLOR

JAMES HARDIE NAVAJO BEIGE
*STANDARD STATEMENT COLLECTION COLOR

JAMES HARDIE TIMBER BARK
*STANDARD STATEMENT COLLECTION COLOR

JAMES HARDIE COBBLE STONE
*STANDARD STATEMENT COLLECTION COLOR

JAMES HARDIE MOUNTAIN SAGE
*STANDARD STATEMENT COLLECTION COLOR

A STREET SCAPE PERSPECTIVE VIEW
SCALE: NONE
STANDARD STATEMENT COLOR SELECTION CAN BE SEEN HERE: https://www.jameshardie.com/statement-collection-colors/

NOTE: DIGITAL COLORS MAY VARY SLIGHTLY FROM ACTUAL PHYSICAL MATERIALS DUE TO LIGHTING AND SCREEN CALIBRATION. THESE ELEVATIONS ARE FOR THE PURPOSES OF SHOWING COLOR ONLY. SEE APPROVED ELEVATIONS ON SHEETS A1 THROUGH A3 FOR ALL OTHER DESIGN REQUIREMENTS

EXHIBIT F

REDSTART
design · build · live
(630) 305 8230
109 W. JEFFERSON AVENUE
NAPERVILLE, IL

MEYER DESIGN
630.389.0594
INFO@MEYERDESIGN.NET

© COPYRIGHT 2026
MEYER DESIGN
ALL RIGHTS RESERVED.
This document is an instrument of service for use with respect to this project and is the sole property of Meyer Design. It may not be copied, reproduced, altered or reused in whole or in part without the express written permission of Meyer Design.

CLIENT:

Mill & Bauer Duplex
Naperville, Illinois

PROJECT NO:
MD25-167

DATE:	DESCRIPTION:
10-16-2025	SCHEMATIC DESIGN
11-10-2025	DESIGN DEVELOPMENT
12-19-2025	DESIGN DEVELOPMENT
3-20-2026	DESIGN DEVELOPMENT
5-1-2026	DESIGN DEVELOPMENT
6-1-2026	DESIGN DEVELOPMENT
6-25-2026	DESIGN DEVELOPMENT
6-30-2026	DESIGN DEVELOPMENT
7-1-2026	DESIGN DEVELOPMENT
7-8-2026	DESIGN DEVELOPMENT

SHEET NO:
A8