FINAL ENGINEERING PLANS

RIVERWALK PLACE

NAPERVILLE, ILLINOIS 60540

LEGEND

PROPOSED	EXISTING	DESCRIPTIONS
		BOUNDARY PROPERTY LINE
		PROPERTY LINE
		RIGHT-OF-WAY
		UNDERLYING PROPERTY LINE
		CENTER LINE
		EASEMENT LINE
		SETBACK LINE
		SECTION LINE
715	715	INDEX (MAJOR) CONTOUR
711	711	INTERMEDIATE (MINOR) CONTOUR
		EXISTING FENCE LINE
		EXISTING WOOD FENCE LINE
		CURB
		EDGE OF PAVEMENT
		EDGE OF GRAVEL
		PAVEMENT SHOULDER
ST	ST	STORM PIPE
		DOWNSPOUT SERVICE LINE
W	W	WATER LINE
SAN	SAN	SANITARY SEWER LINE
FM	FM	PROPOSED FORCEMAIN
G	G	GAS LINE
OH-W	OH-E	OVERHEAD WIRE
E	E	ELECTRIC LINE
C	C	CABLE LINE
FO	FO	FIBER OPTIC LINE
T	T	TELEPHONE LINE
		GUIDE RAIL
		TREELINE
		PROPOSED TRENCH BACKFILL
		PROPOSED CONCRETE
		PROPOSED PAVEMENT
		PROPOSED RIPRAP
		PROPOSED STRIPING
		BUILDING
5.00%		PROPOSED SLOPE LABEL
595.68	595.68	PROPOSED SPOT ELEVATION
000.00TW	000.00TW	TOP OF WALL ELEVATION
000.00BW	000.00BW	BOTTOM OF WALL ELEVATION
000.00TC	000.00TC	TOP OF CURB ELEVATION
000.00FL	000.00FL	FLOWLINE ELEVATION
		SANITARY MANHOLE
		CLEANOUT
		FLARED END SECTION
		STORM MANHOLE
		STORM CATCH BASIN (ROUND LID)
		STORM CATCH BASIN (CURB LID)
		STORM CURB INLET
		STORM INLET (CIRCULAR)
		STORM INLET (SQUARE)
		STORM BEEHIVE INLET
		STORM DRAIN OR DOWNSPOUT
		WATER VALVE VAULT
		WATER VALVE BOX
		FIRE HYDRANT
		ELECTRIC CONTROL CABINET (ABOVE GRADE)
		ELECTRIC HANDHOLE
		TRANSFORMER
		ELECTRIC METER
		LIGHT STANDARD
		UTILITY POLE
		TRAFFIC MANHOLE
		TELEPHONE PULL BOX (FLUSH WITH GRADE)
		TELEPHONE BOX/CABINET (ABOVE GRADE)
		CABLE MANHOLE
		FIBER OPTIC BOX/CABINET (ABOVE GRADE)
		FIBER OPTIC MANHOLE
GMK	GMK	GAS LINE MARKER
		MANHOLE (UNKNOWN)

REFERENCE

1. EXISTING CONDITIONS ARE BASED UPON FIELD OBSERVATIONS MADE ON OCTOBER 10, 2022 BY CIVIL & ENVIRONMENTAL CONSULTANTS, INC.
1. FIELD DATUM: ILLINOIS STATE PLANE NSRS 2011, EAST ZONE– US SURVEY FOOT CITY OF NAPERVILLE DATUM NAVD 88.
2. UNDERGROUND UTILITY INFORMATION SHOWN HEREON IS BASED UPON FIELD OBSERVATIONS, ATLAS MAPS PROVIDED BY THE CITY OF NAPERVILLE AND THOSE PUBLIC UTILITY COMPANIES OPERATING UNDER FRANCHISE OR CONTRACT WITH THE CITY OF NAPERVILLE.

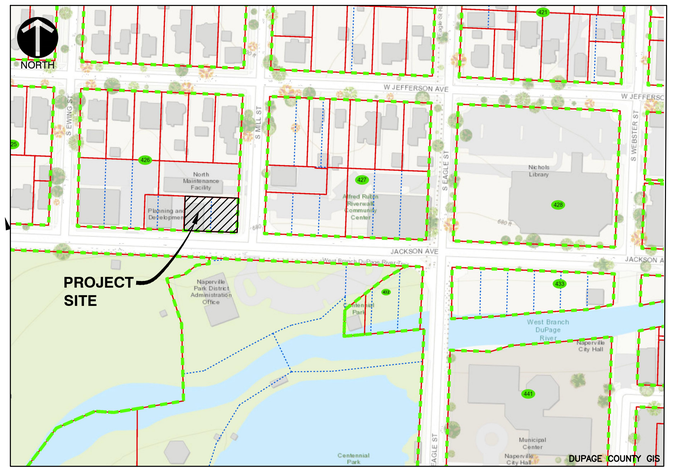

SITE MAP

N.T.S.

811 Know what's below. Call before you dig.

ILLINOIS LAW REQUIRES ANYONE DIGGING TO CALL JULIE AT 1-800-892-0123 AT LEAST 48 HOURS/TWO WORKING DAYS PRIOR TO THE START OF EXCAVATION AND THE PROJECT MUST BEGIN WITHIN 14 CALENDAR DAYS FROM THE CALL.

PROJECT TEAM

OWNER

MIKOLS CONSTRUCTION, INC.
1887 HIGH GROVE LANE
NAPERVILLE, ILLINOIS 60540
PH: (630) 922-0072
CONTACT: RANDY MUELLER

ARCHITECT

R. A. MIFFLIN
1327 JACKSON AVENUE
RIVER FOREST, ILLINOIS 60305
PH: (312) 406-9892
CONTACT: BOB MIFFLIN

CIVIL ENGINEER

CIVIL & ENVIRONMENTAL CONSULTANTS, INC.
1230 EAST DIEHL ROAD, SUITE 200
NAPERVILLE, ILLINOIS 60563
PH: (630) 963-6026
FX: (630) 963-6027
CONTACT: JIM CANEFF, P.E.

LANDSCAPE ARCHITECT

WESTWOOD LANDSCAPE CONTRACTORS
1N617 ARBOR AVENUE
WEST CHICAGO , IL 60185
PH: (630) 231-6090
CONTACT: CRAIG HERNAN

Sheet List Table

Sheet Number	Sheet Title
C000	COVER SHEET
C001	SITE SPECIFICATIONS - 1
C002	SITE SPECIFICATIONS - 2
C003	SITE SPECIFICATIONS - 3
C100	EXISTING CONDITIONS
C101	DEMOLITION AND SOIL EROSION & SEDIMENTATION CONTROL PLAN
C200	SITE DIMENSION PLAN
C300	SITE GRADING PLAN
C500	SITE UTILITY PLAN
C800	DETAILS - 1
C801	DETAILS - 2
C802	DETAILS - 3

BENCHMARKS:

REFERENCE BENCHMARK:

1. NAPERVILLE STATION #1505: BERNSTEN 3D TOP SECURITY MONUMENT IN 6" PVC PIPE WITH BMAC 6 ALUMINUM ACCESS COVER AT THE NORTHEAST CORNER OF WASHINGTON STREET AND AURORA AVENUE.

   ELEVATION=672.24 (NAVD88)

2. NAPERVILLE STATION #1007: BERNSTEN 3D TOP SECURITY MONUMENT IN 6" PVC PIPE WITH BMAC 6 ALUMINUM ACCESS COVER AT THE SOUTHEAST CORNER OF CHARLES STREET AND CHESHIRE LANE.

   ELEVATION=733.69 (NAVD88)

SITE BENCHMARKS:

1. CROSS CUT IN TOP OF CURB ALONG THE SOUTH CURBLINE OF JACKSON AVENUE. SAID CROSS IS 12± FEET WEST OF THE SOUTHWEST CORNER OF THE SUBJECT SITE.
   NORTHING= 1,859,549.08
   EASTING = 1,032,805.30 ELEVATION=683.20
2. CROSS CUT IN PUBLIC SIDEWALK ALONG THE SOUTH CURBLINE OF JACKSON AVENUE. SAID CROSS IS 40± FEET EAST AND 31± FEET SOUTH OF THE CENTER OF INTERSECTION OF JACKSON AVENUE AND MILL STREET.
   NORTHING= 1,859,536.34
   EASTING = 1,033,021.68 ELEVATION=681.05
3. CROSS CUT IN PUBLIC SIDEWALK ALONG THE EAST CURBLINE OF MILL STREET. SAID CROSS IS 27± FEET EAST AND 67± FEET NORTH OF THE CENTER OF INTERSECTION OF JACKSON AVENUE AND MILL STREET.
   NORTHING= 1,859,635.04
   EASTING = 1,033,011.41 ELEVATION=684.49

STATE OF ILLINOIS }
COUNTY OF DUPAGE } SS

I, JAMES G. CANEFF, AN ILLINOIS PROFESSIONAL ENGINEER, HEREBY CERTIFY THAT THESE PLANS HAVE BEEN PREPARED BY CIVIL & ENVIRONMENTAL CONSULTANTS, INC., ILLINOIS LICENSED PROFESSIONAL DESIGN FIRM NO. 184.004002, LICENSE EXPIRES APRIL 30, 2023, UNDER MY PERSONAL DIRECTION FOR THE EXCLUSIVE USE OF THE CLIENT NOTED BELOW. REPRODUCTION OR USE BY THIRD PARTIES IS STRICTLY PROHIBITED WITHOUT THE WRITTEN PERMISSION OF THE UNDERSIGNED.

GIVEN UNDER MY HAND AND SEAL THIS ___ DAY OF _____, 20___.

_____
ILLINOIS LICENSED PROFESSIONAL ENGINEER NO. 46225
REGISTRATION VALID THROUGH NOVEMBER 30, 2023
(NOT VALID WITHOUT ORIGINAL SIGNATURE)

© COPYRIGHT 2023 CIVIL & ENVIRONMENTAL CONSULTANTS, INC. ALL RIGHTS RESERVED.

*HAND SIGNATURE ON FILE

CITY PROJECT NO. 22-10000094

REVISION RECORD

NO	DATE	DESCRIPTION
1	01-27-23	REVISED PER CITY REVIEW, DATED 01-19-23

Civil & Environmental Consultants, Inc.
1230 East Diehl Road, Suite 200 - Naperville, IL 60563
630-963-6026 · 877-963-6026
www.cecinc.com

MIKOLS CONSTRUCTION, INC.
RIVERWALK PLACE
415 W JACKSON AVENUE
NAPERVILLE, ILLINOIS 60540

COVER SHEET

DATE:	12/07/2022	DRAWN BY: SRH
DWG SCALE:	NONE	CHECKED BY: JGC
PROJECT NO:		320-614.3AW00
APPROVED BY:		JGC

DRAWING NO.: C000

SHEET 1 OF 12

P:\320-0001\320-614\-CADD\dwg\FINAL ENGINEERING\320614-C101-000-COVER.dwg[C000] LS:(1/27/2023 - mjung) - LP: 1/27/2023 2:20 PM

PROJECT TECHNICAL SPECIFICATIONS

1. GENERAL NOTES

A. DEFINITIONS
(1) Whenever in these Project Technical Specifications the following terms are used, the intent and meaning shall be interpreted as follows:
(a) Governing Agency: Government or regulatory entity with authority to implement and enforce specific laws, permit requirements, or construction requirements. City of Naperville Standard Specifications for Construction and Standard Details are available online at https://www.naperville.il.us/projects-in-naperville/standard-specifications-for construction/.
(b) Owner: Entity or individual for whom the project is being performed.
(c) Contractor: Entity or individual responsible for performing construction activities and furnishing all labor, materials, equipment and other incidental work necessary for the successful completion of the project and for carrying out all duties and obligations imposed by the contract.
(d) Engineer: Licensed professional engineering entity, or licensed professional engineer and/or authorized agent(s), who represents the Owner during the construction phase of the project work.
(e) Geotechnical Engineer: Licensed professional engineering entity, or licensed professional engineer and/or authorized agent(s), who, in representing the Owner, is involved with the principles, properties and behavior of earth materials with regard to the project work.
(f) Project Drawings / Plans: The drawings that define the required site development activities and improvements.
(g) IDOT Standard Specifications: The current edition of the Illinois Department of Transportation's (IDOT) "Standard Specifications For Road & Bridge Construction" including all applicable current supplemental specifications and special provisions.

B. GOVERNING REGULATIONS
(1) All project activities and improvements shall be in accordance with the Governing Agency regulations. In the event of conflict with these Project Technical Specifications, or the indicated Reference Specifications, the Governing Agency regulations shall apply.

C. REFERENCE STANDARDS AND SPECIFICATIONS
(1) Site development activities and improvements, including site preparation and demolition, earthwork, sanitary sewers, storm drainage, water supply, pavement, lighting, landscape improvements, and erosion/sediment control measures shall be in accordance with the Reference Specifications indicated throughout these Project Technical Specifications. All Reference Specifications shall be incorporated into and made a part of the Project Technical Specifications. When the Reference Specifications conflict with Project Technical Specifications, Project Technical Specifications shall govern.

D. CONTRACT GENERAL CONDITIONS
(1) These Project Technical Specifications supplement the engineering plans, the Agreement between Owner and Contractor, and other supplemental documents that comprise the overall project Contract. These Project Technical Specifications address the technical requirements of the project design as indicated on the Project Drawings (Plans). Unless specifically addressed in the Plans or these Project Technical Specifications, general conditions such as bid items, quantities, unit prices, terms of payment, change management, construction schedule, submittals, and other conditions are defined in the Agreement between Owner and Contractor.
(2) The Contractor shall be responsible for complying with applicable Federal, State, and local requirements, together with exercising precaution at all times for the protection of persons (including employees) and property. It is the sole responsibility of the contractor to initiate, maintain, and supervise all safety requirements, precautions, and programs in connection with the work.
(3) The Contractor shall indemnify and hold harmless the Owner and Engineer for any and all injuries and/or damages to personnel, equipment, and/or existing facilities occurring in the course of the site improvement construction work described in the Plans and these Project Technical Specifications.
(4) The Contractor shall obtain all required construction permits in accordance with local, state, and federal regulations.
(5) The Contractor shall guarantee all materials and workmanship for a period of 1 year following final acceptable by the Owner and the Governing Agencies.

E. QUALITY CONTROL OF MATERIALS
(1) Materials shall be inspected, sampled, and tested before, during, and after they are incorporated into the work. The timing of these activities shall be as appropriate for the materials being placed and the properties (composition, gradation, density, strength, compaction, etc.) being examined. The requirements for quality testing are specified within the applicable sections of these Project Technical Specifications.
(2) Materials not conforming to the requirements of the Project Technical Specifications at the time they are used or installed will be considered unacceptable and shall be removed and replaced with acceptable materials properly installed in place at the Contractor's expense.
(3) When material test results are not within specification tolerances, the supplier shall make appropriate adjustments at its source to correct the issue.
(4) Material inspections, sampling, and testing shall be performed by an independent testing agency/laboratory with suitable capabilities and experience. The testing entity shall be retained by Contractor or Owner, as required or as specified in the Contract Documents.

2. EXISTING CONDITIONS & SITE PREPARATION

A. EXISTING CONDITIONS
(1) Existing conditions as depicted on the Plans are general and illustrative in nature. It is the responsibility of the Contractor to examine the site and be familiar with existing conditions prior to initiating construction. If conditions are encountered, before or during construction, that are significantly different than those shown on the Plans, Contractor shall notify the Engineer immediately.
(2) It is not the Engineer's intent that any single plan sheet in the Plans fully depicts all work associated with the project. The Contractor shall be familiar with all sheets in the Plans for construction. Contractor shall similarly be familiar with all structural, architectural, mechanical, electrical, or other plans, as necessary, for the construction of the overall project.
(3) Contractor shall protect all property corner pins, permanent monuments, and permanent benchmarks during construction. If disturbed, Contractor shall have items reset by a licenses surveyor at Contractor expense.
(4) Contractor shall protect all existing utilities, structures, and features to remain. Any items to remain that have been disturbed or damaged as a result of construction shall be repaired or replaced at Contractor expense.

B. EXISTING UTILITIES
(1) Underground utility information shown on the Plans may be based upon a combination of topographic survey data, field observations, historical utility maps, Owner-provided information, or other available data for the Site. The Plans constitute a representation of utility locations from best known information available to the Engineer. There is no guarantee that the utilities shown comprise all such utilities in the area, either in service, or abandoned.
(2) Contractor shall be responsible for contacting all agencies, utility companies, and pipeline companies known or suspected to have buried cable, duct, sewer, pipes, etc., which may conflict with the project improvements to determine the location and depth of the existing utilities.
(3) If conflicts occur after the existing utility conditions have been determined by field investigations, Contractor shall immediately notify Engineer and either:
(a) Adjust the location and depth of the proposed improvements as directed by Engineer in cooperation with the Owner, or
(b) If relocation of proposed improvements is not feasible, Contractor shall work with Owner and Engineer to make arrangements with the affected utility companies to have their utilities protected or relocated.
(4) All utility disconnection, removal, relocation, cutting, capping, and/or abandonment shall be coordinate with the appropriate utility company / agency.

C. EROSION / SEDIMENTATION CONTROL
(1) Erosion/sedimentation control measures, as indicated on the Plans and as required elsewhere in these Project Technical Specifications, shall be employed during the course of construction operations and until suitable ground covers are established on all construction site areas.
(2) Erosion/sedimentation control measures shall be properly installed and functional prior to any earth disturbing activities.

D. CONSTRUCTION ACCESS
(1) Construction ingress-egress shall be limited to defined connections to adjacent driveways and public roadways, and as indicated on the plans and as required elsewhere in these Project Technical Specifications.

E. TRAFFIC CONTROL
(1) The Contractor shall provide necessary traffic control for work performed in active transportation areas, including any specific traffic control requirements as indicated on the Plans.

F. TEMPORARY CONSTRUCTION FENCING
(1) Temporary construction fences shall be installed where indicated on the Plans and where required by the Engineer to restrict access to and from certain areas. Such fences shall be maintained during construction and removed when all work activities are completed.
(2) Temporary construction fences shall consist of 48-inch-high plastic fabric, metal fabric, or wood lathe fence material (approved by the Engineer, prior to placement) attached to suitable metal posts that are set at 6-foot (or less) intervals and anchored at least 18 inches into the ground.
(3) Temporary chain link construction fences shall be provided where indicated on the Plans.

G. TREE AND LANDSCAPE PROTECTION
(1) Highly visible temporary fences shall be placed around trees and landscape areas designated for protection. Vehicles, equipment, and material storage shall not be allowed within the protection zone.
(2) Vehicle and equipment parking and material storage shall not be permitted within the drip line of any tree, even if the tree is not enclosed in a protective barrier. Vehicles and equipment shall avoid travel within the drip line of trees whenever possible.
(3) Overhanging tree branches within the construction zone that are expected to come in contact with construction equipment shall be properly removed (sawcut) prior to construction in the area. Engineer approval is required before a branch is removed.
(4) Roots of trees that are to be preserved shall be pruned (cut) where indicated on the Plans or required by the Engineer. Tree roots shall be cut with appropriate root pruning equipment to a depth of 24 inches (minimum) before construction begins. The cut shall be made approximately 12 inches closer to the tree than the construction limit (edge of excavation).

H. MATERIAL DISPOSAL
(1) All demolition waste and construction debris shall become the property of the Contractor unless otherwise stated in the Agreement between Owner and Contractor.
(2) The following shall be removed from the construction site and properly disposed of in a legal manner. Unless otherwise stated in the Agreement between Owner and Contractor, the cost of removal and disposal shall be included in the fixed or unit prices for the various contract pay items and no additional payment will be allowed therefor.
(a) All surplus excavated materials.
(b) Construction and demolition debris such as building materials, asphalt and concrete pavement materials, culvert and sewer pipe, utility and drainage structures, retaining walls (concrete, stone and timber), trees, shrubs, and miscellaneous landscape features removed during the installation of the project improvements.
(3) If Contractor intends to dispose of generated construction / demolition debris materials or excavated soils at a regulated clean construction / demolition debris (CCDD) or uncontaminated soil fill operation, the contractor shall be responsible for taking all actions and preparing all documents required by 35 Illinois Administrative Code 1100 prior to transport of the materials / soil to the disposal facility. Materials and soils that do not meet CCDD and uncontaminated soil constituent limit requirements shall be disposed of at a permitted landfill facility. The cost of testing and documentation to evaluate the materials / soils and determine proper disposal requirements shall be as defined in the Agreement between Owner and Contractor.
(4) See Earthwork Operations specification section for additional requirements.

3. EARTHWORK OPERATIONS

A. GENERAL
(1) Except where modified by the following Project Technical Specifications, all earthwork operation and compaction requirements shall be in conformance with the material, installation and testing requirements of the IDOT Standard Specifications.
(2) Earthwork shall include site clearing, tree and hedge removal, topsoil and rootmat stripping and stockpiling, earth and fill material excavation, construction of embankments and slopes, placement and compaction of non-structural fill areas, pavement areas, and structural fill areas, removal and disposal of surplus and unsuitable excavated materials, topsoil placement, and final shaping and trimming to the lines and grades indicated on the Plans.
(3) Prior to commencement of earthwork operations, Contractor shall notify any Utility Protection Service or other Governing Agency, as may be required.

B. SITE CLEARING
(1) All construction site features and items such as structures, foundations, fences, pavements, rubbish/debris, trees, shrubs, and surface vegetation shall be removed where necessary and as indicated on the Plans for the construction of the project improvements.
(2) No tree, shrub, or surface vegetation shall be removed unless it is marked for removal or the Engineer specifically authorizes its removal.
(3) When indicated on the Plans, brush, shrubs, branches and small trees shall be shredded or chipped using suitable mechanical equipment. The resulting material shall be stockpiled on-site, as directed by the Engineer, for the Owners' future use. Tree trunks, branches, and removed stumps too large to be chipped shall be removed from the site and disposed of.
(4) Tree stumps shall be removed by excavation or grinding to a depth of not less than 12 inches below ground surface. Material resulting from stump grinding shall be spread on the ground and excavated as part of topsoil or rootmat stripping.
(5) All items and materials not specifically required to remain on-site shall be removed from the site and disposed of in a legal manner.

C. TOPSOIL AND ROOTMAT REMOVAL
(1) Existing topsoil shall be removed from proposed pavement and building areas, non-structural fill areas, and structural fill areas. Sufficient existing topsoil shall be stockpiled for future use as topsoil replacement. When approved by Geotechnical Engineer, stripped topsoil may be used as non-structural fill to design elevations. Topsoil not used for replacement or for non-structural fill shall be removed from the site and legally disposed of, unless directed by Owner to stockpile on-site for future use. Stockpile locations shall be as authorized by Owner.
(2) Topsoil supplied from off-site sources shall be natural, fertile agricultural soil material capable of sustaining vigorous plant growth. It shall contain not less than 4% nor more than 10% organic matter, as determined in accordance with AASHTO T194. It shall contain not less than 12% nor more than 50% clay and the sand content shall not exceed 55%, both as determined in accordance with AASHTO T88. The pH shall be between 5.0 and 8.0. Topsoil material shall be relatively free from large roots, sticks, weeds, brush, stones larger than 1-inch in diameter, or other litter or waste products. It shall be a loamy mixture having at least 90% passing the No. 10 sieve.
(3) Within proposed pavement and building areas where there is no existing topsoil, the surface layer of organic material (friable soil containing roots or other vegetative matter) shall be removed before starting fill and compaction operations. Such removed material may be used as non-structural fill. If this material is not used as non-structural fill, it shall be removed from the site and legally disposed of.

D. EXCAVATION
(1) Existing earth and fill materials within the project construction limits shall be excavated as necessary to establish the elevations, contours, and drainage patterns indicated on the Plans. Excavated materials classified by Geotechnical Engineer as suitable structural fill material shall be used to construct compacted subgrades within the project building and pavement areas. Excess materials not needed for filling or for the construction of berms or embankments shall be removed from the site and legally disposed of, unless directed by the Engineer or Owner to stockpile on-site for future use. Stockpile locations shall be as authorized by the Owner.
(2) Rock materials within the project construction limits shall be excavated to a minimum of 6 inches below subgrade levels of proposed pavements and pipe bedding. Rock materials shall be removed to a minimum of 18 inches below building and structure foundations. Rock materials shall be defined as boulders one cubic yard or greater in volume and all materials in ledges, bedded deposits, and conglomerate deposits that exhibit the physical characteristics of rock, as determined by Geotechnical Engineer. Excavated rock materials not used for filling or for the construction of berms or embankments shall be removed from the site and disposed of, unless directed by the Engineer or Owner to stockpile on-site for future use. Stockpile locations shall be as authorized by the Owner.
(3) Excavated materials classified by the Geotechnical Engineer as unstable or unsuitable for structural fill purposes and not needed for non-structural fill, shall be removed from the site and legally disposed of, unless directed by the Engineer or Owner to stockpile on-site for future use. Stockpile locations shall be as authorized by the Owner.
(4) Excavations shall be maintained in a well-drained condition at all times. Temporary drainage (dewatering) facilities shall be provided where surface runoff is not possible or effective. Such facilities shall be operated during the entire course of earthwork operations. Dewatering facilities shall include appropriate erosion and sediment control measures, as indicated elsewhere in these Project Technical Specifications. Unless otherwise stated in the Agreement between Owner and Contractor, the cost of temporary drainage facilities and dewatering activities shall be considered incidental to the various pay items of the work.

E. FILL PLACEMENT
(1) Before placing any fill within pavement or structural areas, the existing subgrade shall be compacted as indicated in the "Compaction" section of these Project Technical Specifications. Pavement subgrade areas shall be proof-rolled to check for soft, unstable, or otherwise unsuitable materials and approved by a Geotechnical Engineer prior to paving operations. Where possible, proof-rolling shall be accomplished with at least four passes of a fully loaded tandem axle dump truck. Below-grade footing or foundation areas shall be inspected by a Geotechnical Engineer prior to foundation installation. Soft, unstable, or otherwise unsuitable materials shall be removed and replaced as directed by Geotechnical Engineer.
(2) Structural fill materials shall be soil materials that can be compacted to develop a stability satisfactory to the Geotechnical Engineer. Structural fill materials shall not contain frozen material or any material which, by decay or otherwise, might result in site or foundation settlement.
(3) Material Types For Structural Fill Purposes:
(a) Suitable Fine-Grained Soils - Soil materials that comply with ASTM D2487 Soil Classification Group CL and meet the following requirements:
(i.) Laboratory maximum dry density when determined in accordance with ASTM D698.
(ii.) Plasticity Index greater than 12.
(iii.) Liquid Limit less than 45.
(iv.) Particle size distribution with greater than 50% passing the No. 200 sieve.
(b) Suitable Coarse-Grained Soils - Soil materials that comply with ASTM D2487 soil classification groups GW, GP, GM, SW, SP and SC.
(c) Bituminous concrete and granular base materials removed from existing pavement areas may be used as structural fill, subject to gradation, placement, and compaction control by Geotechnical Engineer.
(d) Impervious clay layers (liners) shall be constructed of fine-grained soils within the CL classification that have a Plastic Index greater than 15 and a moisture content greater than optimum and are free of stones bigger than 1 inch average size.
(4) Unsuitable Fill - Soil materials that are not in conformance with the stated criteria for structural fill material shall not be used as structural fill.
(5) Installed fill layers softened or otherwise damaged by rain, ponded water, or construction activities shall be scarified, dried, and recompacted, or removed and replaced. This work, even if performed after lift or fill acceptance, shall be incidental to the various pay items of the work.
(6) Unsuitable Subgrade Conditions:
(a) Within areas of new or reconstructed pavements, specific requirements for removal and remedial procedures shall be as directed by Geotechnical Engineer. Soft or otherwise unacceptable subgrade materials shall typically be removed to a depth where the minimum in situ unconfined compressive strength is 2.0 tsf and the in situ moisture content is no more than 3 percentage points above the optimum moisture content per ASTM D1557. When the depth of unsuitable material is excessive and does not warrant complete removal, remedial procedures will typically require partial removal of unsuitable subgrade material, placement of a geotextile fabric (MIRAFI 600X or approved equal), and sufficient aggregate fill (IDOT CA-1 or alternate acceptable granular material) to the required subgrade level. Depths of unsuitable subgrade removal will be as directed by the Geotechnical Engineer. Alternative procedures may be required depending on the conditions encountered.
(b) Removal of unsuitable materials and installation of replacement fill material under and adjacent to proposed buildings and structures shall be as specified by Geotechnical Engineer.
(c) Payment for removal and replacement of unacceptable materials and the installation of geotextile fabric and aggregate fill shall be as indicated in the agreement between Owner and Contractor. Such payment shall include all work necessary for removal and disposal of unsuitable materials, supply and placement of fabric and aggregate materials, supply, placement and compaction of additional structural fill material, if required, and any dewatering required during these activities.
(7) Where necessary, structural fill materials shall be placed and compacted under proposed pavements, buildings, and structures. Compacted structural fill shall be placed to required subgrade elevations.
(8) Unsuitable materials may be placed within non-structural fill areas only where fill is required to obtain final subgrade levels. If borrow pits are used to obtain structural fill material, unsuitable materials may be used to bring the borrow areas to grade. Placement of such materials shall be limited to areas and depths authorized by the Geotechnical Engineer. If sufficient acceptable placement areas are not available, remaining unstable and unsuitable materials shall be removed from the site and legally disposed of.
(9) If necessary, Contractor shall provide sufficient suitable structural fill material from off-site sources as necessary to complete earthwork operations to the required levels and elevations indicated on the Plans. Structural fill materials shall be in conformance with the stated criteria for structural fill. Contractor shall provide the Geotechnical Engineer access to the proposed off-site sources to take samples and evaluate materials.

F. FILL COMPACTION
(1) Fill materials shall be placed in layers (lifts) and compacted in accordance with the following specified requirements. Lift thickness shall not exceed 8 inches (loose condition) and the fill material (when compacted) shall have a moisture content within the limits of -1 to +3 percentage points of optimum value. Specific lift thickness and moisture content shall be as determined by the Geotechnical Engineer to obtain the required compaction and strength of material in place.
(2) Cohesive soils and well-graded aggregate mixtures shall be sampled and tested to determine the laboratory maximum density and optimum moisture content (control values) of the material. The test method shall be the ASTM Standard as indicated below.
(3) Free-draining cohesionless soils and aggregate mixtures shall be sampled and tested to determine the laboratory relative density (control value) of the material.
(4) Laboratory density and moisture tests shall be performed to determine the control values for each type and source of material to be used. One test of laboratory maximum density and optimum moisture content shall be performed for each 300 cubic yards of fill and backfill material, and when any change in material occurs that may affect the maximum density or optimum moisture content values.
(5) Aggregate supplier shall provide a written certification that the aggregate gradation and quality conforms to the project requirements. If a certification is not provided, gradation and quality tests shall be performed for each 300 cubic yards of stockpiled or in-place source material.
(6) Non-Structural Areas: The top 6 inches of existing subgrade and all layers of cohesive soil and well-graded granular fill materials shall be compacted to at least 90% maximum dry density, as determined by the Standard Proctor Method (ASTM D698). Free-draining aggregate and soil materials (ASTM D4253 & D4254) shall be placed and compacted as specified by Geotechnical Engineer.
(7) Pavement Areas: The top 6 inches of existing subgrade and all layers of cohesive soil and well-graded granular fill materials shall be compacted to at least 95% maximum dry density, as determined by the Standard Proctor Method (ASTM D698). Free-draining aggregate and soil materials (ASTM D4253 & D4254) shall be placed and compacted as specified by Geotechnical Engineer.
(8) Building Areas: The top 6 inches of existing subgrade and all layers of cohesive soil and well-graded granular fill materials shall be compacted to at least 95% maximum dry density, as determined by the Standard Proctor Method (ASTM D698). Free-draining aggregate and soil materials (ASTM D4253 & D4254) shall be placed and compacted as specified by Geotechnical Engineer.
(9) Impervious Clay Liners: All layers of clay fill material shall be compacted to at least 92% maximum dry density, as determined by the Standard Proctor Method (ASTM D698).
(10) Soil and aggregate fill materials compacted in place shall be field tested to determine in-place density and moisture values. A nuclear density gauge shall be used in accordance with ASTM D6938 to measure in-place density/moisture values of cohesive soils and well-graded aggregate materials, unless Geotechnical Engineer determines other testing equipment is more suitable for the type of material being tested. The dry unit weight of the in-place compacted material shall be compared to its control value to determine the percent compaction achieved.
(11) Frequency of fill material moisture content and compaction tests shall be as follows, unless otherwise adjusted by Geotechnical Engineer.
(a) When using materials from exposed stockpile, excavation, or borrow area sources, a minimum of two moisture content tests per day shall be performed for each type and source of material being placed during stable weather. During unstable weather, moisture content tests shall be performed as determined by Geotechnical Engineer.
(b) Within pavement areas, one in-place density test shall be performed for each 6,000 square feet, or fraction thereof, of each lift of material placed during each day.
(c) Under building/structure ground slabs and mat foundations, one in-place density test shall be performed for each 3,000 square feet, or fraction thereof, of each lift of material placed during each day.
(d) Under building/structure wall footings, one in-place density test shall be performed for each 100 lineal feet, or fraction thereof, of each lift of material placed during each day.
(e) Under building/structure column footings, one in-place density test shall be performed for each footing, of each lift of material placed during each day.

G. MOISTURE CONTROL
(1) Where the subgrade, or other layer of soil, must be moisture-conditioned before compaction, the top 12 inches of the material shall be scarified or disked and then dried or moistened as required to achieve compaction. Water shall be applied uniformly in a manner that prevents free water from appearing on the surface during, or subsequent to, compaction operations. Material that is too wet to air dry and compact to the specified density shall be removed and replaced.

H. GRADING TOLERANCES
(1) Surface elevations shall be within the following indicated tolerances.
(a) Under vehicle, pedestrian, and drainage control pavements, and building floor slabs: -0.08 to +0.04
(b) Drainage swales and stormwater basins: -0.10 to +0.10
(c) Embankments and slopes other than (b) above: -0.15 to +0.15
(2) Unless otherwise noted, grades and contours shown on the Plans are final topsoil and pavement surface elevations. All excavated and filled areas not within the limits of buildings, structures, or pavements shall be graded to 6 inches below the indicated elevations to allow for topsoil placement, unless otherwise indicated on the Plans.

I. RESTORATION
(1) Previously prepared earth subgrade areas that are damaged by soil erosion or construction activities shall be repaired and graded to design contours and elevations before placement of pavement materials or topsoil.
(2) Areas not otherwise subject to disturbance that are damaged by movement or storage of construction vehicles, equipment, or materials, or other construction activities such as the discharge of water from the construction site, shall be restored to original conditions.

J. TOPSOIL PLACEMENT
(1) Topsoil shall be placed on all of the following areas. Minimum topsoil depth shall be 6 inches unless otherwise indicated on the Plans. Topsoil placement shall include grading and shaping to required final contours and elevations.
(a) All project grass, landscape, or other vegetated areas indicated on the Plans.
(b) All unpaved offsite areas damaged by installation of project associated utilities or pavements.
(c) All unpaved offsite areas disturbed by project associated activities.
(2) Within new wetland areas, topsoil shall be placed in a manner to minimize compaction of the material. Minimum lift thickness shall be 12 inches unless otherwise indicated on the Plans. The placed material shall be disked or tilled to a depth of at least 8 inches. Once the topsoil is placed, no vehicles except the disking/tilling equipment shall be allowed on the material.
(3) If required or as indicated on the Plans, Contractor shall obtain and provide necessary topsoil material from off-site sources (any stockpiled topsoil on the site shall also be used). The suitability of material supplied by Contractor shall be as defined elsewhere in these Earthwork Specifications. Contractor shall provide the Geotechnical Engineer access to proposed off-site sources to take samples and evaluate the materials.

K. DISPOSAL OF MATERIALS
(1) Surplus soil materials remaining after completion of fill placement and construction of berms shall be removed from the site and disposed of in legal manner, unless directed by the Owner to stockpile on-site for future use. Stockpile locations shall be as authorized by the Owner.
(2) Removal and disposal of existing utility pipes and structures, construction debris, or other obstructions which interfere with proposed construction and which are not indicated in the Agreement between Owner and Contractor as a separate pay item shall be considered incidental to the earthwork operations.
(3) Contractor shall be responsible for finding locations and obtaining approvals for the off-site disposal of demolition and construction debris, rubbish, pavement materials, shrubs, trees, and surplus, unsuitable excavated soil materials. Owner shall be advised, in writing, of the specific locations of all off-site disposal sites.

4. SANITARY SEWERS, STORM DRAINAGE AND WATER SUPPLY SYSTEMS

A. GENERAL
(1) REFERENCE SPECIFICATIONS
(a) Sanitary sewers, storm drainage, and water supply improvements shall be constructed in accordance with the material, installation and testing requirements of the "Standard Specifications for Water and Sewer Main Construction in Illinois," current edition; except where said requirements are modified by these Project Technical Specifications.
(b) References to "IDOT" requirements or standards shall mean in conformance to the material, installation, and testing requirements of the current edition of the IDOT Standard Specifications.
(2) UNSUITABLE SOIL CONDITIONS
(a) When unsuitable soil conditions are encountered under pipes or structures that require the removal of unsuitable materials below the depth of the standard bedding, the Contractor shall replace the material removed with granular material approved by the Geotechnical Engineer. Depth and extent of removal shall be as determined by the Geotechnical Engineer.
(b) Unless defined otherwise in the Agreement between Owner and Contractor, payment for unsuitable soil removal shall be made at the contract unit price per cubic yard of soil removed and replaced with granular material. Unless defined otherwise in the Agreement between Owner and Contractor, the cost of removing and disposing of the unsuitable material and supplying and placing the granular fill and any dewatering required during these activities shall be considered incidental to the various pay items of the work.
(3) PIPE BEDDING, HAUNCH SUPPORT & INITIAL BACKFILL
(a) Concrete pipe, clay pipe, ductile iron pipe, cast iron pipe, and other types of pipe classified as rigid shall be placed on a 4-inch layer of compacted granular bedding material. This granular material shall also be placed on each side of the pipe (haunch support) from the top of bedding up to the horizontal midpoint of the pipe. Granular bedding and haunch material shall consist of graded crushed stone 1/4 inch to 3/4 inch in size (IDOT equivalent CA-11), unless otherwise specified on the Plans.
(b) Thermoplastic pipe (e.g., PVC and HDPE), corrugated metal pipe, and other types of pipe classified as flexible shall be supported with granular bedding, haunching, and initial backfill in accordance with ASTM D2321, except as hereby modified. Class I embedment material (angular graded stone) 1/4 inch to 3/4 inch in size (IDOT equivalent CA-11) shall be used as bedding, haunching, and initial backfill material and initial backfill material shall be installed to 12 inches above the top of the pipe.
(c) Where a pipe projects from an embankment or natural ground, the last 3 feet of bedding and backfill at the pipe end shall be impervious material compacted in place.
(d) Unless otherwise stated in the Agreement between Owner and Contractor, the cost of providing and placing granular bedding, haunch support, and initial backfill material shall be included as part of the fixed price or unit prices for sewer / culvert or main construction of the sizes and types specified.
(4) GRANULAR BACKFILL
(a) Selected granular material shall be used to backfill excavated trenches under all existing and proposed vehicle pavements and sidewalks, trenches with edges closer than 2 feet from edges of existing and proposed vehicle pavements and sidewalks, and where specifically indicated on the Plans. Selected granular material for backfilling trenches shall be IDOT Gradation CA-6, unless otherwise indicated.
(b) Selected granular backfill material placed in trenches under existing and proposed pavements shall be placed in uniform layers not exceeding 6 inches (loose measured) and compacted with mechanical equipment to 95% of the standard proctor density in accordance with the applicable AASHTO or ASTM requirements.
(5) STRUCTURE ADJUSTMENT
(a) Adjustments may be necessary to ensure that frames and grates match the elevation of the surrounding pavement or ground surface. Preformed adjusting rings of the proper dimensions needed to mate the frame to the precast structure shall be used. No more than 12 inches of vertical adjustment may be made using the minimum practical number of individual rings.
(b) All rings shall be High Density Polyethylene Plastic (HDPE), Recycled Rubber, High Density Expanding Polystyrene, Expanded Polypropylene (EPP), or other material as approved by the City Engineer. Precast concrete rings, bricks, rocks, shims, or concrete blocks will not be allowed. Tapered adjusting rings shall be required when the frame will need to match the slope of the roadway.
(c) A resilient, flexible, non-hardening, preformed bituminous mastic material, Conseal 102B or approved equal, shall be used between the cone or top barrel section of the structure and the adjusting rings. A thick bead of non-hardening elastomeric joint sealant conforming to ASTM C-920, Type S, Grade NS, shall be applied between all individual rings, and between the adjusting rings and the frame. The sealant or mastic material shall be applied in such a manner that no surface water or ground water inflow can enter the structure.
(d) All storm sewer structure frames without inside flanges shall be shaped with hydraulic cement or elastomeric joint sealant to form a fillet to the structure or adjusting rings and to maintain water-tightness.
(e) Frame adjustments shall be completed in accordance with Sections 602 and 603 of Standard Specifications for Road and Bridge Construction, prepared by the Illinois Department of Transportation, latest edition, except as noted herein.
(f) Structure adjustments shall be included in the prices of the utility structures being installed or modified and will not be paid for separately.
(6) MARKER POSTS
(a) Sewer and water main structures, valve boxes, and the end location of sewer stubs and building services shall be marked with a 4 x 4 x 8′ wood post. Four feet of the post shall stand aboveground. The top 6 inches of the post shall be painted to identify the type of utility (sanitary - orange; storm - yellow; water - blue).
(b) Providing and installing marker posts shall be incidental to the cost of sewer and water main construction.

B. SEPARATION OF WATER MAINS AND SEWERS
(1) HORIZONTAL SEPARATION
(a) Water mains shall be located at least 10 feet horizontally (edge to edge) from existing or proposed sanitary sewers and storm sewers.
(b) Water mains may be located closer than 10 feet to a sewer when:
(i.) Local conditions prevent a lateral separation of 10 feet and
(ii.) The bottom of the water main is at least 18 inches above the top of the sewer and
(iii.) The water main is either in a separate trench or in the same trench on an earth shelf located to one side of the sewer.
(c) When it is impossible to meet (i) or (ii) above, the sewer shall be encased in a water-tight pipe or constructed of pressure pipe meeting water main standards. The sewer shall also be pressure tested to maximum expected surcharge head before backfilling.
(d) These requirements shall also apply to water service lines.
(2) VERTICAL SEPARATION
(a) Whenever a water main crosses a sanitary sewer or a storm sewer, the water main shall be separated from the sewer so that the bottom of the water main is at least 18 inches above the top of the sewer. This vertical separation shall be maintained for that portion of the water main located within 10 feet horizontally (measured perpendicular, either direction) of the O.D. of the sewer crossed.
(b) Whenever the required 18-inch vertical separation cannot be maintained between a sewer and a water main, the water main shall be protected by means of one of the following methods:
(i.) Construct the sewer of pressure pipe meeting water main standards for a distance of 10 feet each side (measured perpendicular) of the O.D. of the water main.
(ii.) Install either the sewer or water main within a watertight casing pipe for a distance of 10 feet each side of the crossing (measured perpendicular to the line not provided with the casing pipe). Seal both ends of the casing with hydraulic grout.
(iii.) The method to be used at each specific location shall be as indicated on the Plans. In the event that a clearance problem is not discovered until after construction is underway, Engineer shall determine which method to use.
(c) A vertical separation of 18 inches between the bottom of the sewer and the top of the water main shall be maintained wherever a water main crosses under a sewer.
(d) Construction requirements (regarding vertical separation, materials and structural support) at sewer-water main crossings shall be in conformance with the Standard Specifications for Water and Sewer Main Construction in Illinois.
(e) These requirements shall also apply for water service lines.

C. SANITARY SEWERS SYSTEMS
(1) See City of Naperville Department of Public Utilities (DPU) Water/Wastewater General Notes.

D. STORM DRAINAGE SYSTEMS
(1) See City of Naperville - Transportation, Engineering, and Development (TED) Business Group Plan Notes for Development Projects.

E. WATER SUPPLY SYSTEMS
(1) See City of Naperville - Department of Public Utilities (DPU) Water/Wastewater General Notes.

5. PAVEMENT CONSTRUCTION

A. GENERAL
(1) All roadway, driveway, parking area, storage area, and sidewalk pavements (including curbs and shoulders) shall be constructed in accordance with the material and installation requirements of the current edition of the IDOT Standard Specifications, except where said requirements are modified by the following Project Technical Specifications.
(2) Pavement markings and markers, and traffic control signs and devices, shall be provided, installed, and removed in accordance with the requirements of the IDOT Standard Specifications, except where said requirements are modified by the following Project Technical Specifications.

B. PAVEMENT REPLACEMENT/REPAIR
(1) Existing pavements removed for excavation purposes or damaged by construction operations shall be removed and replaced in conformance to the material and construction requirements of the IDOT Standard Specifications and the requirements of the subsequent portions of this specification section.

REVISION RECORD

NO	DATE	DESCRIPTION
-	01-27-23	NO REVISIONS THIS SHEET

Civil & Environmental Consultants, Inc.
1230 East Diehl Road, Suite 200 - Naperville, IL 60563
630-963-6026 · 877-963-6026
www.cecinc.com

MIKOLS CONSTRUCTION, INC.
RIVERWALK PLACE
415 W JACKSON AVENUE
NAPERVILLE, ILLINOIS 60540

SITE SPECIFICATIONS - 1

DATE:	12/07/2022	DRAWN BY:	SRH
DWG SCALE:	NONE	CHECKED BY:	JGC
PROJECT NO:		320-514.3AW00	
APPROVED BY:			JGC

DRAWING NO.: C001

P:\320-003\320-6141-CAD\Dwg\FINAL ENGINEERING\320614-CV01-C001-C003-SITE SPECIFICATIONS.dwg[C001] LS:(1/27/2023 - mjung) LP: 1/27/2023 2:20 PM

(2) Asphalt and concrete pavements shall be sawcut prior to excavation. Damaged or jagged pavement edges shall be neatly sawcut and removed prior to installing new pavement.
(3) Replacement material types and thickness shall be as indicated on the Plans.
(4) Pavement repair limits shall be as indicated on the Plans. Pavement repairs outside of these limits shall be at the Contractor's expense.

C. SUBGRADE PREPARATION
(1) Prior to placement of pavement material, all subgrade areas shall be proof-rolled to check for possible unsuitable or unstable soil conditions. Proof-rolling shall be witnessed by the Geotechnical Engineer. Should unsuitable or unstable material be encountered within pavement areas, unsuitable/unstable material shall be removed to a depth as described in the Earthwork Section of these Project Technical Specifications. Such materials shall be replaced with suitable structural fill material and compacted in place as specified by Geotechnical Engineer. When complete removal of the unsuitable material is not warranted or feasible, remedial procedures (as required by Geotechnical Engineer) shall be used.
(2) Installed structural fill and excavated subgrade damaged by construction traffic, ponded water, or other causes within Contractor's control shall be replaced or repaired at Contractor's sole expense.

D. PAVEMENT MATERIALS
(1) Various pavement types, materials, and thicknesses shall be as indicated on the Plans.
(2) Aggregate base courses shall be Aggregate, Type B (100% crushed). Aggregate gradation shall be CA-6, except where permeable base course material gradation is specified on the Plans. Aggregate materials shall conform to IDOT Specifications Article 1004.04, except that the use of crushed concrete shall not be allowed.
(3) Permeable base course material shall be Aggregate, Type C (100% crushed). Aggregate gradation shall be CA-7, except where alternate material gradation is specified on the Plans. Aggregate materials shall conform to IDOT Specifications Article 1004.04, except that the use of crushed concrete shall not be allowed.
(4) Hot-mix asphalt (HMA) pavement materials and mixtures shall be in accordance with Sections 406, 407, 1030 and 1031 of the IDOT Standard Specifications.
(5) HMA Mixture Requirements

Item	Mixture	AC Type	Voids
Surface Course	HMA, Mix D, N50	PG 64-22	4%
Binder Course	HMA, IL-19, N50	PG 64-22	4%

(6) Aggregate materials shall meet or exceed the following strength requirements:
Aggregate, Type B (100% crushed) 80 IBR
Granular Material, Type B 30 IBR
(7) Binder and surface course mixtures may contain reclaimed asphalt pavement (RAP) material resulting from the cold milling or crushing of existing hot-mix asphalt (HMA) pavements. Use of RAP material in new pavement courses shall be in conformance with applicable IDOT requirements.
(8) Bituminous prime coats shall be in accordance with IDOT Specifications Article 406.05. Application rates shall be as follows with the required rate to be as specified by Engineer:
HMA binder or base - 0.05 to 0.10 gallons/S.Y.
Aggregate base - 0.25 to 0.50 gallons/S.Y.
(9) Portland cement concrete (PCC) for curbing, vehicle pavements, sidewalks and support slabs on-grade shall conform to IDOT requirements (3500 psi at 14 days, 5% to 8% air-entrainment) and shall be properly cured in-place. Vehicle pavements shall be Class PV. Curbing, sidewalks and support slabs shall be Class SI.
(10) PCC curbing shall have expansion joints complete with dowel bars (AASHTO M227), dowel bar assemblies and preformed joint filler (AASHTO M213). PCC curbing shall contain continuous reinforcing bars (AASHTO M31).
(11) Sub-base material under PCC pavements and curbing shall be Subgrade Granular Material, Type B (100% crushed).
(12) PCC pavements other than sidewalks shall be provided with contraction, construction, and isolation joints complete with load transfer dowel assemblies, tie bars, and joint material (poured sealer, preformed filler, or elastomeric compression seal) as indicated on the Plans. Joint components, materials, and construction shall be in conformance to applicable IDOT Standard Specifications and IDOT Standard 420001.
(13) Welded wire fabric shall be placed in PCC pavements where indicated on the Plans. Welded wire fabric shall conform to the requirements of AASHTO M55.
(14) Where indicated on the Plans, PCC pavement shall be reinforced with polypropylene fibrillated fibers (ASTM C1116 Type 111, 4.1.3) specifically manufactured to an optimum gradation for use as concrete secondary reinforcement. Fibers shall be added to the concrete mix at the rate of 1.5 pounds per cubic yard. Mixing times and speeds shall be as specified in ASTM C94.

E. PAVEMENT MATERIAL QUALITY CONTROL
(1) Hot Mix Asphalt Pavement
(a) The HMA supplier shall provide a written certification that the HMA material conforms to the Project Technical Specifications.
(b) Specified in-place pavement compaction values shall be based on the representative laboratory densities provided by the HMA supplier for the various HMA design mixes to be installed.
(c) The installation of all HMA pavement components (base, binder, and surface courses) and placement lifts shall be inspected and tested to verify compliance with the specified material compaction, temperature, and lift thickness requirements.
(d) One in-place density test, to determine in-place percent compaction, shall be performed for each 2,000 square feet, or fraction thereof, of each lift of material placed during each day.
(e) Measurements to determine HMA temperatures at time of compaction and lift thicknesses shall be performed on a periodic basis during the HMA installation operations. The number of temperature and lift measurements shall be not less than the number of density tests performed during the operations.
(f) If the Project Technical Specifications require pavement cores of the completed work, one core shall be taken for each 4,000 square feet of the installed pavement area.
(2) Portland Cement Concrete Pavement
(a) The concrete supplier shall provide a written certification that the concrete mix is in accordance with the Project Technical Specifications.
(b) Concrete delivered to the work site shall be field-tested before placement to verify that the slump, temperature, and air content values of the material complies with the Project Technical Specifications. Air content, slump, and temperature shall be performed each time a set of test cylinders is prepared. If the air content does not conform to the Project Technical Specifications, additional tests shall be performed on each truckload of concrete until the air content is determined to be within the specified tolerance range. If slump values exceed the maximum specified amount, when excessive variation in the workability of the concrete is observed, or when excessive crumbling or clumping is observed along the edges of slip-formed concrete, additional slump tests shall be performed on the same, or subsequent, truckloads until slump is determined to be within the specified tolerance range.
(c) Representative samples of the concrete mix shall be placed in a set of five standard cylinders for compressive strength testing. The cylinder sets shall be delivered to the material testing laboratory within 32 hours of taking the samples. Two cylinders shall be tested for compressive strength 7 days after the samples were taken. Two cylinders shall be tested 14 days after the samples were taken. One cylinder shall be held in reserve. A sample set (five cylinders) for strength testing shall be taken for each class of concrete not less than once a day, nor less than once for each 100 cubic yards of each class of concrete poured in place.
(d) Concrete delivered to the work site shall be subject to Governing Agency limitations for haul time and material temperature.

F. COMPACTION
(1) Aggregate base course and HMA material shall be placed in layers and compacted. Layer thicknesses shall be as indicated in the applicable IDOT Standard Specifications for the various pavement components and materials. Where layer thickness variation is permitted, thicknesses installed shall be as determined by the Geotechnical Engineer to obtain required compaction and strength of material in place.
(2) Aggregate base course and granular sub-base materials shall be compacted to not less than 95% maximum dry density determined in accordance with the Standard Proctor Method (ASTM D698).
(3) Free-draining granular materials (porous granular embankment and permeable base course material) shall be placed and compacted as specified by the Geotechnical Engineer.
(4) HMA binder and surface course mixtures, HMA base course, and HMA shoulder mixtures shall be placed and compacted in accordance with the requirements of the applicable IDOT Standard Specifications.
(5) Aggregate base course material shall be graded and compacted the same day it is placed on the subgrade.

G. GRADING AND SURFACE TOLERANCES
(1) Surface elevations of completed aggregate bases and sub-bases shall not exceed design surface elevations by more than 1/4 inch. Surface elevations less than design value shall be corrected by adding aggregate or by installing additional thickness of required HMA or PCC pavement material. Such additional HMA or PCC pavement shall be provided at Contractor's expense.
(2) Allowable final surface variations of HMA and PCC pavements (tested with a 10-foot straightedge) shall not exceed 1/4 inch, but Engineer has the right to require corrective measures when variations less than the specified tolerance cause obvious drainage problems. Corrective measures required when the allowable variation is exceeded shall be as indicated in IDOT Specifications Articles 407.09 and 420.10.

H. PAVEMENT THICKNESS TOLERANCE
(1) HMA pavements that have a thickness deficiency of more than 10% shall be removed and replaced if required by Engineer.
(2) PCC pavements (including sidewalks and slabs on-grade) that have a thickness deficiency of more than ½ inch or 10% (whichever is less) shall be removed and replaced if required by Engineer.
(3) Determination of pavement thickness shall be as indicated in IDOT Specifications Articles 407.10 (HMA) and 420.15 (PCC).
(4) Thin pavement removal and replacement shall be at Contractor's expense.

I. PC CONCRETE PROTECTIVE COAT
(1) PCC vehicle pavements and PCC sidewalks immediately adjacent to vehicle pavements shall be given a linseed oil mixture protective coat treatment (two coats, each at an application rate of not more than 50 S.Y. per gallon of mixture) in accordance with IDOT Specifications Article 420.18 and Section 1023.

J. PC CONCRETE CURING
(1) PCC pavement and sidewalks to receive a protective coat treatment shall be cured by means of Methods (1), (2), or (3) of IDOT Specifications Article 1020.13 (waterproof paper, polyethylene sheeting, or wetted burlap).
(2) Concrete surfaces not to receive such treatment can be sealed with membrane curing compound - Method (4).
(3) The curing period in all cases shall be at least 72 hours.
(4) Hot or cold weather concrete curing methods and time periods shall be in accordance with ACI 305 and ACI 306 for hot and cold weather respectively.

K. PAVEMENT MARKINGS AND MARKERS
(1) Pavement markings and markers shall be as indicated on the Plans. Parking spaces shall be defined with 4-inch-wide lines. Stop lines on private drives shall be 24 inches wide.
(2) Pavement markings on driveways and parking areas shall be of a paint suitable for such use according to IDOT Standard Specifications. Materials, installation, and equipment shall meet the requirements of IDOT Standard Specifications Section 780. Required markings shall be as indicated on the Plans.
(3) Pavement lane and auxiliary markings on public roadways shall be reflectorized thermoplastic material conforming to IDOT Standard Specifications. Materials, installation, and equipment shall meet the requirements of IDOT Standard Specifications Section 780.
(4) Pavement marking words and symbols shall conform to the dimensions and spacing specified in the Illinois Manual on Uniform Traffic Control Devices and on IDOT Standard 780001.
(5) Raised reflective pavement markers shall be provided where shown on the Plans. Marker materials and installation shall meet the requirements of IDOT Specifications Section 781.
(6) Existing markings and markers shall be removed as necessary to delineate realigned traffic lanes. Removal shall be in accordance with IDOT Specifications Section 783.

L. ACCESSIBLE PARKING SPACES
(1) Accessible parking spaces shall be in accordance with Illinois Accessibility Code requirements. Each space shall be 16 feet wide and be provided complete with a painted striped aisle (8 feet wide with diagonal 4-inch lines), a standard accessible symbol painted on the pavement, and standard post- or wall-mounted signs (R7-8 "reserved parking" with accessible symbol, R7-8a "van accessible" and R7-I101 "$250 fine").
(2) Required signs (R7-8, R7-8a and R7-I101) shall be mounted on a post or wall located at the front center of the parking space, and no more than 5 feet horizontally from the front of the space. The bottom of the lowest sign shall be a minimum of 4 feet above finished grade.
(3) Signposts shall conform to AASHTO and IDOT standards for "break-away" design.
(4) The pavement area behind the white accessible symbol shall be painted blue. The markings outlining the space and the diagonals within the access aisle of the space shall be of yellow paint.
(5) Pavement slopes across accessible parking stalls and adjoining access aisles shall be maximum 2%.

M. TRAFFIC CONTROL SIGNS
(1) Traffic control signs shall be provided as indicated on the Plans. All signs shall conform to applicable size, material, and installation requirements of the Illinois Manual of Uniform Traffic Control Devices and IDOT Specifications Section 720. Signposts shall be in accordance to IDOT Standards 720011 and 729001 and IDOT Specifications Section 729.

6. SOIL EROSION / SEDIMENT CONTROL AND SITE RESTORATION MEASURES

A. GENERAL
(1) Contractor shall take suitable and sufficient measures to control soil erosion and sedimentation due to construction and site development activities. These measures shall be in substantial conformance with the principles, practices, and standards described in the Illinois Environmental Protection Agency (IEPA) publication "Illinois Urban Manual."
(2) Specific erosion/sediment control and restoration measures shall be as indicated on the Plans, as stated in these Project Technical Specifications, and as described in the "Storm Water Pollution Prevention Plan" (SWPPP, if required) prepared for the Project.
(3) If disturbance exceeds 1 acre and a SWPPP has been prepared for the site, construction and site development work shall comply with the requirements and procedures of the NPDES (National Pollution Discharge Elimination System) Permit No. ILR10, issued by the IEPA for storm water discharge from construction site activities.
(4) Site clearing and excavation shall not proceed until a phased program for performing all required construction and restoration activities is prepared by Contractor and approved by Engineer. The purpose of this program is to control erosion and sediment problems by minimizing the extent of areas subject to erosion during construction and establishing permanent ground covers as soon as possible. The program shall include preparation of site plans indicating planned sequence and extent of specific construction and restoration areas.
(5) Contractor responsibilities shall include the maintenance and repair of all seeded, sodded, and planted surfaces until all specified vegetative covers within the project area are suitably established and erosion potential has ceased.
(6) Construction dewatering operations shall be designed and operated so that water discharged from the project site will meet State of Illinois water quality standards, as set forth in Title 35, Subtitle C, Chapter I, Part 302, Subpart B, Illinois Administrative Code.
(7) Installation and maintenance of all required erosion/sediment control and restoration measures shall be subject to inspection by the Governing Agency. Deficient conditions shall be corrected when required by the Governing Agency.

B. STABILIZATION PRACTICES
(1) Contractor shall limit removal of existing vegetated ground covers only to areas absolutely required to perform the project work. Structural sediment barriers shall be installed at the construction limits of the site as indicated on the Plans. Vegetation within areas that are protected by barrier fencing on the Plans shall not be disturbed during construction.
(2) Exposed soil surfaces shall be stabilized with vegetation and/or protective mulches or blankets. If conditions prevent effective use or placement of such measures, then the installation of structural controls such as sediment barrier fencing and sediment traps will be required.
(3) Surface stabilization measures shall be initiated immediately after earthwork operations have permanently ceased or have temporarily ceased on any portion of the site and will not resume for a period exceeding 14 calendar days. Stabilization of disturbed areas must be initiated within 1 working day of permanent or temporary cessation of earth disturbing activities and shall be completed as soon as possible but not later than 14 days from the initiation of stabilization work in an area.
(4) If construction activity is anticipated to temporarily halt for a period of less than 14 calendar days, then surface stabilization measures do not have to be initiated on that portion of the site as long as the site conforms to the erosion and sediment control requirements of the Plans, SWPPP, and ILR10 permit. Where the initiation of surface stabilization measures by the specified time after construction activity temporarily or permanently ceases is precluded by weather conditions, stabilization measures shall be initiated as soon as practicable.
(5) Temporary seeding shall be employed when necessary due to seasonal limitations or temporary work stoppages. When seasonal weather conditions prevent seeding, sodding, or planting operations, sloped surfaces shall be blanketed or mulched with suitable material as a means of temporary erosion protection.
(6) Areas with permanent vegetative cover seeding shall be protected by applied mulch or erosion control blankets.

C. SEDIMENT BARRIERS
(1) Temporary sediment barriers shall be installed where indicated on the Plans and maintained until soil surfaces have been stabilized with grass or other types of permanent cover. Such barriers shall be silt fences, compost filter socks, coir fiber logs, or other devices as indicated on the Plans.
(2) Work area perimeter temporary sediment barriers shall be installed prior to the start of site disturbance and earthwork operations.
(3) Storm sewer systems shall be installed as soon as earthwork operations permit. Drainage structures shall be graded to a subgrade level 12 inches below the structure rim to create temporary sediment traps unless otherwise indicated on the Plans.
(4) Geotextile filter fabric sediment barriers shall be installed over casting grates of drainage structures that receive surface runoff. Silt fence or compost filter sock barriers shall be placed around drainage structures where the use of filter fabric barriers over the grate is ineffective or not feasible and where silt fences or filter socks are indicated on the Plans. Structures requiring sediment barriers, and the types of barriers to be provided, shall be as indicated on the Plans.
(5) All sediment barriers shall be replaced or cleaned as necessary during construction when they become clogged or ineffective. All sediment traps shall be cleaned periodically during construction to allow them to operate effectively.

D. CONSTRUCTION INGRESS-EGRESS
(1) Construction ingress-egress shall be limited to defined paved driveway connections to adjacent public roadways or where indicated on the Plans. Construction exits shall be cleaned daily, as needed to prevent the spread of mud or debris on the public road pavement. Mud and debris shall be cleared from public roads whenever it occurs and as required by the Public Roadway Authority.
(2) Private roadways, driveways, parking lots, etc., used by construction vehicles and equipment shall be cleaned of mud and debris daily as needed to keep the pavements clean of such materials.
(3) Temporary aggregate pavements for ingress-egress of construction vehicles shall be installed where indicated on the Plans. These pavements shall be maintained and repaired by Contractor as necessary to enable use by vehicles during the entire construction project.
(4) Temporary pavement thickness, aggregate gradation, and geotextile fabric underlayment to be provided shall be as indicated on the Plans.
(5) The upper 6 inches of temporary aggregate access pavements shall be removed upon completion of construction activities and replaced with 6 inches of topsoil, graded to match the adjacent topography, and restored in accordance with the Plans.

E. WATER DIVERSION AND DEWATERING
(1) Methods for diverting water flow, controlling groundwater, and removing stormwater from work sites shall include erosion and sediment control measures as necessary to prevent erosion at pump discharge locations and to minimize the discharge of settleable solids.
(2) Stone or concrete block riprap protection, or other filtering measures, shall be provided at discharge locations when deemed necessary by Engineer.
(3) Sediment traps or water removal sump pits shall be provided when required by Engineer.

F. DUST CONTROL
(1) When dust blowing from construction sites may become a traffic hazard or a danger to the health or comfort to persons downwind, it shall be controlled either permanently or temporarily depending upon the state of development of the site. Dust control measures shall be taken when required by Governing Agency or directed by Engineer.
(2) Dust problems from active construction areas shall be kept under control by means of watering dry surfaces and/or the application of calcium chloride. Application and repetition rates shall be as necessary for effective control.
(3) When dust problems occur from disturbed areas, watering and/or calcium chloride are not effective, and weather conditions prevent effective erosion control seeding, such areas shall be stabilized by the application of chemical tackifiers such as "MARLOC" (Reclamore Co.) or "Soil Seal" (Soil Seal Corp.). Application rates and procedures shall be in accordance with manufacturer's recommendations.
(4) In the event of severe dust problems, the Governing Agency may stop such dust-producing activities until the problem is resolved.

G. SOIL STOCKPILES
(1) Soil stockpiles shall be located to prevent sediment runoff into watercourses and drainage systems, or onto adjacent roadways and properties, and, if shown, shall be placed where indicated on the Plans. Stormwater runoff from soil stockpiles shall include erosion control devices as necessary to prevent erosion or sedimentation.
(2) Soil stockpiles to remain in place more than 15 days shall be surrounded with a sediment barrier fence unless runoff from the stockpile area drains directly to a constructed sediment trap.
(3) Soil stockpiles that will remain in place longer than 60 days shall be stabilized with temporary erosion control seeding (seed and mulch) within 15 days after construction of the stockpile.

H. UNVEGETATED AREAS
(1) Unvegetated areas expected to remain unpaved or unrestored for longer than 60 days shall be stabilized with temporary erosion control seeding and mulching within 15 days after earthwork operations have ceased.
(2) If unvegetated areas are to remain unpaved or unrestored for less than 60 days, sediment barrier fences or excavated sediment traps shall be installed if Engineer determines that sediment runoff will affect adjacent areas.
(3) Unvegetated steep slopes shall be protected by hydromulching the exposed ground with a Bonded Fiber Matrix, Stabilized Fiber Matrix, or Flexible Growth Medium product (applied at rates recommended by the product manufacturer for the site conditions) when such protection is indicated on the Plans or required by Engineer. Other unvegetated steep slope protection, if required, shall be as indicated on the Plans.

I. TOPSOIL PLACEMENT AND VEGETATIVE COVER
(1) Weather conditions permitting, topsoil shall be placed and graded within each defined construction area as soon as practical upon completion of cut and fill operations within that area.
(2) Seeding, planting and erosion protection operations to establish permanent vegetative ground cover shall be performed within 1 day after topsoil placement, whenever weather conditions are adequate for such work.
(3) Temporary erosion control measures shall remain in place until upland areas are permanently vegetated whereby a minimum of 70% of every square yard seeded is covered with a uniform stand of vegetation in a live, healthy condition and erosion potential no longer exists.

J. DRAINAGE OUTLETS AND OVERFLOWS
(1) Erosion protection (stone riprap, concrete block mats, or other specified method) shall be provided at drainage pipe outlets and stormwater basin overflows immediately following installation of the outlet/overflow structures.

K. DRAINAGE CHANNELS AND SWALES
(1) Drainage channel and swales shall be stabilized and protected with the installation of aggregate trench checks, a cellular confinement system, seeding, and/or turf reinforcement mat where and as indicated on the Plans.

L. EROSION CONTROL SEEDING AND MULCHING
(1) Areas which may not be at final grade but will remain undisturbed for longer than 60 days (including soil stockpile areas) shall be seeded and/or mulched, as required by Engineer, within 15 days of stoppage of construction activities within the area.
(2) Seed mixture to be used for temporary erosion control seeding of excavated, filled, graded, or otherwise disturbed areas shall be IDOT Class 7 - 114 lbs. / acre.
(3) Seed mixtures should be applied mechanically so that the seeds are planted at a depth of 1/4 to 1/2 inch. If the seed is broadcast or hydroseeded, secondary raking or harrowing is required.
(4) Seeded areas shall be protected with a wood / cellulose fiber mulch containing a pre-blended chemical tackifier. Mulch application rate shall be 2,000 lbs. per acre (minimum). Tackifier rate shall be as recommended by the product manufacturer.
(5) When indicated on the Plans or required by Engineer, seeded slopes shall be protected by hydromulching the areas with a Bonded Fiber Matrix, Stabilized Fiber Matrix or Flexible Growth Medium product applied at a rate recommended by the product manufacturer for the site conditions. The type of product to be used shall be as indicated on the Plans or determined by Engineer. Other slope protection, if required, shall be as indicated on the Plans.
(6) When seasonal weather conditions or construction operations prevent seeding, sodding, or planting operations for a prolonged period (as determined by Engineer), exposed soil slopes shall be protected by hydromulching the areas with a Bonded Fiber Matrix, Stabilized Fiber Matrix or Flexible Growth Medium product applied at a rate recommended by the product manufacturer for the site conditions. The type of product to be used shall be as determined by Engineer.

M. PERMANENT VEGETATIVE COVERS
(1) Vegetative ground covers shall be provided, installed, and protected in accordance with the Plans.
(2) Vegetative areas (other than lawns) damaged by construction activities, but not within the Project disturbed limits, shall be seeded with IDOT Class 1B Seed Mixture (200 lbs. / acre); unless a different type of seed mixture is indicated on the Plans to match the original conditions. These seeded areas shall be protected with a wood / cellulose fiber mulch (2,000 lbs. / acre) containing a preblended chemical tackifier.
(3) Lawn areas damaged by construction activities shall be restored with turf grass sod to match original conditions.

N. EROSION CONTROL BLANKETS
(1) Seeded areas shall be covered with erosion control blankets where indicated on the Plans and where specifically required by Engineer. These blankets shall be placed within 24 hours of seeding.
(2) Erosion control blankets shall be of one or more of the following types and shall be as specified on the Plans or in these Project Technical Specifications. Installation shall be in accordance with manufacturer recommendations and requirements.

Type 1: Knitted straw fiber blanket with attached photodegradable plastic top and bottom nets: North American Green S150 or
equivalent.

Type 2: Mat of wood fiber material with attached photodegradable plastic top and bottom nets: American Excelsior Company Curlex II
or equivalent.

Type 3: Knitted straw and coconut fiber blanket with a UV stabilized polypropylene top net and a photodegradable bottom net: North
American Green SC150 or equivalent.

Type 4: Knitted coconut fiber blanket with a turf reinforcement mat of UV stabilized polypropylene material and top and bottom UV
stabilized polypropylene nets: North American Green C350 or equivalent.

(3) Contractor shall be responsible for maintaining the blankets in place until a satisfactory stand of vegetation is established.

O. PERMANENT TURF REINFORCEMENT MATS
(1) As a means of permanent erosion protection, specific seeded areas shall be covered with turf reinforcement mats (polypropylene fiber matrix product) where indicated on the Plans and where required by Engineer. These mats shall be placed within 24 hours of seeding.
(2) Turf reinforcement mats shall be of one or more types (with or without netting and straw / coconut fiber blanket layers) as specified on the Plans. Installation shall be in accordance with manufacturer recommendations and requirements.
(3) Contractor shall be responsible for maintaining the mats in place until a satisfactory stand of vegetation is established

P. SODDING
(1) Grass areas removed or damaged by construction activities shall be restored with sod and maintained until the sod is knitted to the soil. Disturbed grass areas shall be sodded except where other measures are indicated on the Plans or required by Engineer.
(2) Sodding (including fertilizing) shall be in accordance with Section 252 of the IDOT Standard Specifications, as applicable to this project and as specified herein. Sod material shall be in accordance with Article 1081.03. It is specifically noted that sod grown on soil high in organic material such as peat will not be acceptable.
(3) After required topsoil has been placed and graded, the areas to be sodded shall be thoroughly tilled to a depth of at least 3 inches by disking, harrowing, or other approved methods until the condition of the soil is acceptable to Engineer. If as a result of a rain, a crust is formed over the prepared surface, the surface shall again be placed in a suitable condition for placing sod.
(4) All soil surfaces shall be moist when the sod is placed. When directed by Engineer, Contractor shall be required to apply water to dry soil surfaces at a minimum rate of one gallon per square yard immediately prior to placing the sod.
(5) Fertilizer shall be applied uniformly at a rate of 90 pounds of Nitrogen (N), 54 pounds of available Phosphoric (P2O5), and 36 pounds of Soluble Potash (K2O) per acre; and shall be incorporated into the soil to a depth of at least 3 inches by disking, harrowing or other approved methods acceptable to Engineer. The incorporation of fertilizer may be a part of the tillage operation specified above.
(6) Contractor shall have complete responsibility for watering sodded areas (number, schedule, and rates of applications) as necessary to prevent death or damage of sod material due to lack of water during the time period between sod placement and when the sod becomes knitted to the soil and is growing in place.
(7) If Contractor does not water the sod within 24 hours after notification that the sod is showing damage due to lack of water, Owner reserves the right to engage another contractor to do the work and the cost thereof will be deducted from the monies payable to Contractor for the cost of sodding. Contractor will not be relieved of the responsibility for defective sod or unsatisfactory growing of sod due to the hiring of another contractor by Owner for watering the sod.
(8) If Contractor desires to use water from hydrants, it shall make application to the proper authority, and shall conform to the municipal ordinances, rules, or regulations concerning their use. Water obtained from hydrants shall be at Contractor's expense.
(9) Contractor shall be responsible for the maintenance of all areas sodded under the contract, including necessary watering and resodding, and for the satisfactory establishment of knitted sod grass on all sodded areas until final acceptance of the work. In the event that the length of time between sodding and final acceptance is insufficient for Engineer to determine that acceptable growth is established, final acceptance of the work will not be made until the following growing season or until such time that the grass cover can be appraised as satisfactory.
(10) Approval and acceptance of sodded areas will require that a minimum of 95% of the material within every square yard of sod installed be in a live, healthy condition and be firmly knitted to the soil. Defective or unacceptable sod shall be removed, replaced and watered at Contractor's expense.
(11) Only areas within the defined construction limits that are authorized for topsoil replacement will be considered for payment for sodding. All other grass areas that are damaged by construction operations shall be sodded and restored at Contractor's expense and will not be paid for separately.
(12) Unless defined otherwise in the Agreement between Owner and Contractor, this work will be paid for at the contract unit price per square yard for sodding, which price shall be payment in full for all fertilizer and sod materials and all labor and equipment necessary to perform and complete sodding operations, including watering and other maintenance activities necessary to establish a satisfactory grass cover. Fertilizer nutrients will not be paid for separately and shall be included in the contract unit price for this work.

Q. PERMANENT SEEDING
(1) Where indicated on the Plans, vegetative areas disturbed by construction activities shall be restored by the proper application of fertilizer, seed, seed mixture, and protective mulch or blanket, and maintenance of said areas until a satisfactory stand of vegetation is established.
(2) Seeding including fertilizing and mulching shall be in accordance with Sections 250 and 251 of the IDOT Standard Specifications, as applicable to this project and as specified herein.
(3) Seed mixtures and application rates shall be as indicated on the Plans. Application rates for dormant seeding shall be at least 150% of specified rates.
(4) Contractor shall submit lists of all materials (seeds, fertilizer, mulches and blankets) and proposed application rates to Engineer for approval prior to starting any seeding work. Contractor shall also submit (to Engineer) a list of equipment to be used in performing this work, prior to starting any such work.
(5) After required topsoil has been placed and graded, the areas to be seeded shall be thoroughly tilled to a depth of at least 3 inches by disking, harrowing, or other approved methods until the condition of the soil is acceptable to Engineer. If as a result of a rain, a crust is formed over the prepared surface, the surface shall again be placed in a suitable condition for seed planting.
(6) Fertilizer shall be applied uniformly at a rate of 90 pounds each of Nitrogen (N), available Phosphoric (P2O5), and Soluble Potash (K2O) per acre; and shall be incorporated into the soil to a depth of at least 3 inches by disking, harrowing or other approved methods acceptable to Engineer. The incorporation of fertilizer may be a part of the tillage operation specified above. Fertilizer nutrients and seed shall be applied in two separate operations.
(7) Seed mixture shall be applied so that the seeds are planted at a depth of ¼ to ½ inch. If the seed is placed by broadcasting or hydro-seeding rather than planted to proper depth by mechanical means, raking, harrowing or rolling with a corrugated roller shall be required.
(8) Seeded areas shall be covered with mulch products, erosion control blankets, or turf reinforcement mats within 24 hours of seeding. The methods of protection to be used shall be as indicated on the Plans.
(9) Mulching shall be by machine application of wood / cellulose fiber mulch (containing a preblended chemical tackifier) applied as a slurry of 2,000 pounds of mulch and not less than 2,000 gallons of water per acre. Mulching shall not be applied concurrently with seeding. Other mulching products and methods (such as Bonded Fiber Matrix, Stabilized Fiber Matrix and Flexible Growth Medium) shall be used where specifically indicated on the Plans.
(10) Seasonal seeding operations shall take place between March 15 and September 30 and only after specific authorization by the Engineer. Dormant seeding, if authorized, shall take place between November 1 and March 1. Seeding outside of these two time frames may be performed provided the Contractor guarantees a minimum of 75 percent growth over the entire seeded area after a period of establishment.
(11) Contractor shall have complete responsibility for watering seeded areas (number, schedule, and rates of applications) as necessary to prevent death or damage of seeds and new vegetation due to lack of water, during the time period between seeding and when the vegetation becomes rooted in the soil and is growing in place.
(12) If Contractor does not water the seed and vegetation within 24 hours after notification that the seed and vegetation are showing damage due to lack of water, Owner reserves the right to engage another contractor to do the work and the cost thereof will be deducted from the monies payable to Contractor for the cost of seeding. Contractor will not be relieved of the responsibility for defective seed or unsatisfactory growing of seed due to the hiring of another contractor by Owner for watering the seed.
(13) If Contractor desires to use water from hydrants, it shall make application to the proper authority, and shall conform to the municipal ordinances, rules, or regulations concerning their use. Water obtained from hydrants shall be at Contractor's expense.
(14) Contractor shall be responsible for the maintenance of all areas seeded under the contract, including all necessary watering, reseeding, and remulching and for the satisfactory growth of vegetation on all seeded areas until final acceptance of the work. In the event that the length of time between seeding and final acceptance is insufficient for Engineer to determine that acceptable growth is established, final acceptance of the work will not be made until the following growing season or until such time that the vegetation cover can be appraised as satisfactory.
(15) Approval and acceptance of seeded areas will require that a minimum of 80% of every square yard seeded be covered with a uniform stand of vegetation in a live, healthy condition. Reseeding, remulching, and watering of unacceptable areas shall be at Contractor's expense.
(16) Only areas within the defined construction limits that are authorized for topsoil replacement will be considered for payment for seeding. All other vegetation areas that are damaged by construction operations shall be seeded and restored at Contractor's expense.
(17) Unless defined otherwise in the Agreement between Owner and Contractor, this work will be paid for at the contract unit prices per square yard for seeding and for mulching, which prices shall be payment in full for all seed, fertilizer, and mulch materials and all labor and equipment necessary to perform and complete grass seeding and mulching operations, including watering and other maintenance activities necessary to establish a satisfactory grass cover. Fertilizer nutrients will not be paid for separately and shall be included in the contract unit price for seeding.

REVISION RECORD

NO	DATE	DESCRIPTION
1	01/27/23	NO REVISIONS THIS SHEET

Civil & Environmental Consultants, Inc.
1230 East Diehl Road, Suite 200 - Naperville, IL 60563
630-963-6026 · 877-963-6026
www.cecinc.com

MIKOLS CONSTRUCTION, INC.
RIVERWALK PLACE
415 W JACKSON AVENUE
NAPERVILLE, ILLINOIS 60540

SITE SPECIFICATIONS - 2

DATE: 12/07/2022	DRAWN BY: SRH
DWG SCALE: NONE	CHECKED BY: JGC
PROJECT NO: 320-614.3AW00	
APPROVED BY: JGC	

DRAWING NO.: C002

P:\320-000\320-614\-DA001\Dwg\FINAL ENGINEERING\320614-CV01-C002-SITE SPECIFICATIONS.dwg(C002) LS:(1/27/2023 - mjung) - LM: 1/27/2023 2:20 PM

CITY OF NAPERVILLE - DEPARTMENT OF PUBLIC UTILITIES
WATER/WASTEWATER GENERAL NOTES

a. New water main valves, including pressure tap valves, adjacent to an existing water main, and existing water main valves shall only be operated by the City of Naperville, Department of Public Utilities CEE/CM Division personnel with 48-hour notice (Monday-Friday). Contact Naperville DPU-W/WW (630) 420-4122 for scheduling.

b. Any existing utility structures requiring adjustment or reconstruction shall be completed by the contractor to the satisfaction of the utility owner. Adjustments and/or reconstructions not called for on the plans shall be considered incidental to the contract. No more than a total of 12 inches of adjusting rings and/or 2 adjusting rings shall be allowed. All structure frames shall be flush with final grade.

c. Trees shall be installed a minimum of five (5) feet horizontally from underground electrical feeders, sanitary sewers, sanitary services, water mains, and water services. Trees shall be installed a minimum of ten (10) feet horizontally from utility structures and appurtenances, including, but not limited to, manholes, valve vaults, valve boxes and fire hydrants. No trees, shrubs or obstacles will be allowed 10' in front of, 5' on the sides, and 7' to the rear of the electrical transformer.

d. All retainer glands when required to restrain valves, fittings, hydrants, and pipe joints shall be mechanical joint wedge action type MEGALUG 1100 Series as manufactured by EBBA Iron, Inc. or UNI-FLANGE BLOCKBUSTER 1400 SERIES as manufactured by Ford Meter Box Co. and shall be for use on ductile iron pipe conforming to ANSI/AWWA C151/A21.51, for nominal pipe sizes 3” through 48”.

e. Existing ductile iron systems for restraining push-on pipe bells shall be MEGALUG SERIES 1100HD or FORD SERIES 1390.

f. Existing ductile iron systems requiring restraint shall be MEGALUG SERIES 1100SD (split MEGALUG) for mechanical joints.

g. Ductile iron water main to be Class 52. All ductile iron pipe is to be encased in polyethylene film Polyethylene encasement to be installed in accordance with ANSI/AWWA C105/A21.5-05.

h. A set of as-built record drawing shall be given to the City of Naperville upon completion of improvements showing the elevation and location (tied to two points) of all new and existing structures including fire hydrants, valve boxes and vaults, linestop sleeves, water service corporation stops, water main fittings/bends, manholes, sanitary service wyes (measured from downstream manhole), and abandoned water or sanitary service lines. All elevations should be referenced to the same benchmark datum as the original design plans. Horizontal ties shall be referenced to lot lines, back of curb, or property corners.

i. All sanitary sewer piping shall be PVC pipe meeting the requirements of ASTM D-2241 with joints conforming to ASTM D-3139. All sanitary sewer fittings shall be PVC meeting the following requirements: 4” to 12” shall be Injection Molded Fittings meeting ASTM D-2241. Greater than 12” shall be Fabricated Fittings meeting ASTM D-2241 or C905. Minimum pressure rating shall be 150 psi.

j. The valves less than 16” shall be standard pattern, gate valves and shall have the name or mark of the manufacturer, size and working pressure plainly cast in raised letters on the valve body. Valves may be approved from one of the following manufacturers: American, Clow, Waterous or Kennedy.

k. Stainless steel nuts, bolts/T-bolts, and washers, Type 304 or better, will be required on all water main installations. This would apply to hydrants, tapping sleeves, valves, fittings, restraint, and other appurtenances buried or in valve vaults. Mechanical joints and restraint glands require 304 stainless steel T-bolts. An anti-seize compound shall be factory applied to nuts or bolts - any damage to this coating shall be repair with field applied approved anti-seize compound that is a molybdenum-base lubricant, Bostik Never-Seez or approved equal.

l. The contractor shall rotate and/or adjust any existing and/or new hydrant to the satisfaction of the Department of Public Utilities

m. Water mains shall be subjected to a hydrostatic/leakage test in accordance with Naperville Standard Specifications. Test pressure shall be no less than 150 psi for a period of 4 hours and not vary by more than + 5 psi. during the test. The test gauge shall be approved by the City and shall be glycerin or oil filled, with a range of not more than 200 psi and increments not greater than 5 psi, 4 “ minimum dial size. Water recovery test shall be completed at the end of the testing period to show actual leaking and that the water main did not have too much trapped air in the tested section.

n. The City of Naperville DPU-W/WW does not guarantee that any valve or fitting in the existing water distribution system will hold against a hydrostatic/leakage test. The Contractor is solely responsible for providing an acceptable pressure test which shall include provisions around existing valves and fittings.

o. Fire hydrant should be bagged “NOT IN SERVICE” until all testing and disinfection has been completed and new water main section is service.

p. Sanitary sewer and water shall be constructed, tested, and placed into service in accordance with City of Naperville Standard Specification and Specifications for Water and Sewer Main Construction in Illinois, Latest Edition.

q. All valve boxes, vaults, hydrants, and manholes shall not be covered with construction debris and shall remain accessible to the respective utility company.

r. Water service line smaller than 3” shall be type K copper. If joints are required due to length of service, then only compression type coupling shall be permitted. No soldered or flared type joints are allowed.

s. All sanitary manholes shall be tested for leakage by vacuum testing. The manhole frame and adjusting rings shall be in place when testing. Any leaks shall be repaired from exterior of manhole - patching inside of manhole shall not be acceptable. A vacuum of 10” (254 mm) Hg shall be place on the manhole and the time shall be measured for the vacuum to drop to 9” (229 mm) Hg. The vacuum shall not drop below 9” (229 mm) Hg for the following time periods for each size of manhole:
   i. 48-inch diameter - 60 seconds
   ii. 60-inch diameter - 75 seconds
   iii. 72-inch diameter - 90 seconds
   iv. 84-inch diameter - 105 seconds
   Any manholes that fail the test shall be sealed and re-tested until acceptable.

t. The contractor shall provide internal televised inspection of all installed sanitary sewer, laterals, manholes and connections to the public system. Following completion of televising work, the contractor shall submit video recordings on DVD or flash drive along with a comprehensive televising report which will indicate the location, footages and nature of any defects. All defects shall be repaired to the satisfaction of the Water/Wastewater Utility and re-televised.

u. Contractor work hours are only allowed from 7:00 a.m. to 5:00 p.m., Monday through Saturday. No work shall be permitted on Sundays.

v. Sanitary pipes with less than 4 feet or more than 25 feet of cover shall be constructed of ductile iron piping (Class 50, minimum) and encased in polywrap.

w. All excavations more than 20 feet deep must be protected by a system designed by a registered professional engineer.

x. Contractor shall maintain 2' minimum clearance between existing utilities and new foundations and underground facilities. In areas where foundations and underground facilities are proposed adjacent to existing utilities, the contractor shall pot hole by vacuum excavation or hand excavation to locate the existing utility to verify minimum clearance requirement.

y. Fences shall be installed a minimum of 5 feet from any water or sanitary mains when running parallel with them. Where fences are installed crossing water or sanitary mains, the posts shall be located to have the main between them.

z. All brass components shall be certified to be lead free in compliance with NSF 61 and NSF 372 and identified with applicable markings.

OTHER NOTES:

A. Manholes shall be furnished with a self-sealing frame and solid cover (Neenah Foundry R-1772-CVH, East Jordan Iron Works 1022-3, or equal approved by the City Engineer) with the word "Sanitary" imprinted on the cover in raised letters (see Standard Detail SAN 3). Frames and lids shall meet or exceed AASHTO H-20 loading specifications.

B. Both the manhole frame and cover shall have machined horizontal and vertical bearing surfaces. Inverted manhole frames are not allowed.

C. Pick holes shall not create openings in the manhole cover.

D. Bolt-down frames and covers shall be Neenah Foundry R-1916-F1, East Jordan Iron Works 1040 ZPT or equal approved by the City Engineer. Frames are to be bolted to cone. Bolt-down frames shall be used where indicated on the plans.

E. Manhole frames shall be adjusted to proper grade using reinforced, precast concrete or fiberized rings. Brick or concrete blocks will not be allowed. Fiberized adjusting rings shall be required when frame will be with a roadway area. Final frame adjustment for manholes within the roadway area shall be in accordance with Sections 602 and 603 of Standard Specifications for Road and Bridge Construction, prepared by the Illinois Department of Transportation, latest edition.

F. All manhole frames and adjusting rings shall be securely sealed to the cone section or top barrel section of the manhole using resilient, flexible, non-hardening, preformed bituminous mastic material, Conseal 102 B or approved equal. The mastic shall be applied in such a manner that no surface water or ground water inflow can enter the manhole through gaps between the top barrel section or cone section and the first adjusting ring, between adjusting rings, or between the last adjusting ring and the manhole frame. Up to 12 inches (300 mm) of adjusting rings may be installed on a given manhole. No more than one 2-inch (50 mm) adjusting ring, and no more than two adjusting rings in total shall be used.

G. A continuous layer of non-hardening, preformed bituminous mastic material, Conseal 102 B or approved equal shall be applied to each manhole barrel cone and top section to provide a watertight seal.

H. All brass components shall be certified to be lead free in compliance with NSF 61 and NSF 372 and identified with applicable markings.

I. The sanitary forcemain shall be tested a minimum of one (1) hour at 1.5 times the shut off head of the pump, 2.5 times the operating pressure, or 20 psi, whichever is greatest. Allowable leakage shall be in accordance with section 41-2.14C of the Standard Specifications for Water and Sewer Construction.

TRANSPORTATION, ENGINEERING AND DEVELOPMENT BUSINESS GROUP STANDARD CONSTRUCTION PLAN NOTES FOR DEVELOPMENT PROJECTS

GENERAL NOTES

1. THE OWNER OR HIS/HER/THEIR REPRESENTATIVE IS RESPONSIBLE TO OBTAIN ANY AND ALL PERMITS REQUIRED BY APPLICABLE GOVERNMENTAL AGENCIES.

2. ALL WORK SHALL BE PERFORMED IN ACCORDANCE WITH THE CITY OF NAPERVILLE DESIGN MANUAL AND STANDARD SPECIFICATIONS (CURRENT EDITION) AND WITH THE ILLINOIS DEPARTMENT OF TRANSPORTATION'S "STANDARD SPECIFICATIONS FOR ROAD AND BRIDGE CONSTRUCTION" (CURRENT EDITION).

3. ALL CONTRACTORS DOING WORK IN THE PUBLIC RIGHT-OF-WAY MUST BE LICENSED (WHEN APPLICABLE) TO MAKE PUBLIC IMPROVEMENTS WITHIN THE NAPERVILLE CORPORATE LIMITS.

4. THE CONTRACTOR/DEVELOPER ASSUMES ALL RESPONSIBILITY AND LIABILITY FOR ANY ACTION RESULTING FROM THEIR WORK WITHIN THE PUBLIC RIGHT-OF-WAY.

5. THE CONTRACTOR/DEVELOPER SHALL INDEMNIFY AND HOLD HARMLESS THE CITY OF NAPERVILLE.

6. PRIOR TO COMMENCEMENT OF ANY OFF-SITE CONSTRUCTION, THE CONTRACTOR SHALL SECURE WRITTEN AUTHORIZATION THAT ALL OFF-SITE EASEMENTS HAVE BEEN SECURED AND THAT PERMISSION HAS BEEN GRANTED TO ENTER ONTO PRIVATE PROPERTY.

7. THE CONTRACTOR AND THEIR ON-SITE REPRESENTATIVES WILL BE REQUIRED TO ATTEND A PRE-CONSTRUCTION MEETING WITH THE CITY OF NAPERVILLE PRIOR TO ANY WORK BEING STARTED. A PRE-CONSTRUCTION MEETING WILL NOT BE SCHEDULED UNTIL THE PROJECT HAS BEEN APPROVED BY THE CITY OF NAPERVILLE DEVELOPMENT REVIEW TEAM AND THE REQUIRED SURETY HAS BEEN POSTED.

8. A MINIMUM OF 48 HOURS NOTICE SHALL BE GIVEN TO THE CITY OF NAPERVILLE TED BUSINESS GROUP (630-420-6082) PRIOR TO STARTING WORK OR RESTARTING WORK AFTER SOME ABSENCE OF WORK FOR ANY REASON.

9. IT SHALL BE THE CONTRACTOR'S RESPONSIBILITY TO ADEQUATELY IDENTIFY AND LOCATE ALL EXISTING UTILITIES PRIOR TO EXCAVATION. BEFORE STARTING CONSTRUCTION, THE CONTRACTOR SHALL CONTACT JULIE FOR THE LOCATION OF ANY AND ALL UTILITIES. THE TOLL-FREE NUMBER IS 800-892-0123. IT IS THE RESPONSIBILITY OF THE CONTRACTOR TO LOCATE ANY PRIVATE FACILITIES OR NON-JULIE MEMBER FACILITIES.

10. THE CONTRACTOR CAN SCHEDULE ALL NECESSARY SITE INSPECTIONS WITH THE CITY OF NAPERVILLE BY CALLING (630) 420-6082 BETWEEN THE HOURS OF 8:00AM AND 4:00PM (CLOSED 1:00PM TO 2:00PM DAILY) ON WEEKDAYS WHEN THE CITY IS OPEN FOR BUSINESS. THE CONTRACTOR WILL BE REQUIRED TO PROVIDE THE SITE PERMIT NUMBER FOR THE PROJECT IN ORDER TO SCHEDULE THE INSPECTION(S).

11. RECORD DRAWINGS ARE REQUIRED TO BE SUBMITTED AND APPROVED BY THE CITY OF NAPERVILLE PRIOR TO FINAL OCCUPANCY BEING GRANTED.

12. FINAL ACCEPTANCE OF PUBLIC IMPROVEMENTS SHALL BE GRANTED ONLY AFTER A FINAL INSPECTION HAS BEEN COMPLETED AND HAS REVEALED THAT ALL IMPROVEMENTS HAVE BEEN SATISFACTORILY COMPLETED IN ACCORDANCE WITH THE NAPERVILLE STANDARD SPECIFICATIONS. UTILITIES ARE NOT CONSIDERED ACCEPTED UNTIL THEY ARE FORMALLY ACCEPTED BY THE CITY COUNCIL AS REQUIRED IN ACCORDANCE WITH THE NAPERVILLE MUNICIPAL CODE.

STORM SEWER NOTES (GENERAL)

1. NO CONNECTION TO AN EXISTING PUBLIC STORM SEWER MAY BE MADE WITHOUT PERMISSION OF THE CITY ENGINEER.

2. THE CONTRACTOR SHALL REPAIR ANY EXISTING FIELD DRAINAGE TILE DAMAGED DURING CONSTRUCTION AND PROPERLY REROUTE AND/OR CONNECT SAID TILE TO THE NEAREST STORM SEWER OUTLET. ALL LOCATIONS OF ENCOUNTERED FIELD DRAINAGE TILE SHALL BE PROPERLY INDICATED ON THE CONTRACTOR'S RECORD DRAWINGS.

STORM SEWER NOTES (STORM SEWER WORK IN PLANS)

1. THE FOLLOWING MATERIALS ARE PERMITTED FOR STORM SEWER AND PIPE CULVERTS. WHERE A PARTICULAR MATERIAL IS SPECIFIED IN THE PLANS OR SPECIAL PROVISIONS, NO OTHER KIND OF MATERIAL WILL BE PERMITTED:

   a. REINFORCED CONCRETE PIPE (RCP) - REINFORCED CONCRETE PIPE SHALL CONFORM TO ASTM DESIGNATION C 76, CLASSES I, II, III, IV OR V. BITUMINOUS JOINTS SHALL CONFORM TO ASTM DESIGNATIONS C 14 OR C 76 AS MAY BE APPLICABLE. BITUMINOUS MATERIAL SHALL CONSIST OF A HOMOGENEOUS BLEND OF BITUMEN, INERT FILLER, AND SUITABLE SOLVENT APPROVED BY THE CITY ENGINEER. RUBBER GASKET JOINTS SHALL CONFORM TO ASTM C 433. REINFORCED CONCRETE PIPE SHALL ALSO BE PERMITTED AS ROUND, ELLIPTICAL, OR BOX SHAPED OR AS REINFORCED CONCRETE ARCH CULVERT.

   b. NON-REINFORCED CONCRETE PIPE - NON-REINFORCED CONCRETE PIPE SHALL BE ALLOWED FOR PIPES WITH A 10 INCH OR SMALLER DIAMETER. NON-REINFORCED CONCRETE PIPE SHALL CONFORM TO ASTM DESIGNATION C 14, CLASS 3. BITUMINOUS JOINTS SHALL CONFORM TO ASTM DESIGNATIONS C 14 OR C 76 AS MAY BE APPLICABLE. BITUMINOUS MATERIAL SHALL CONSIST OF A HOMOGENEOUS BLEND OF BITUMEN, INERT FILLER, AND SUITABLE SOLVENT APPROVED BY THE CITY ENGINEER. RUBBER GASKET JOINTS SHALL CONFORM TO ASTM C 443.

   c. DUCTILE IRON PIPE (DIP) - DUCTILE IRON PIPE SHALL CONFORM TO ANSI A 21.51 (AWWA C-151), CLASS THICKNESS DESIGNED PER ANSI A 21.50 (AWWA C-150), TAR (SEAL) COATED AND CEMENT LINED PER ANSI A 21.4 (AWWA C-104), WITH MECHANICAL OR RUBBER RING (SLIP SEAL OR PUSH ON) JOINTS. ALL DUCTILE IRON PIPE SHALL BE WRAPPED WITH POLYETHYLENE.

   d. POLYVINYL CHLORIDE PIPE (PVC) - POLYVINYL CHLORIDE (PVC) PIPE SHALL CONFORM TO ASTM D 3034, TYPE PSM. THE MINIMUM STANDARD DIMENSION RATIO (SDR) SHALL BE 26. THE PIPE SHALL BE MADE OF PVC PLASTIC HAVING A MINIMUM CELL CLASSIFICATION OF 12454-C, AND SHALL HAVE A MINIMUM PIPE STIFFNESS OF FORTY-SIX (46) LBS. PER INCH (317 KPA). JOINTS FOR PVC PIPE SHALL BE FLEXIBLE ELASTOMETRIC SEALS PER ASTM D 3212.

   e. HIGH DENSITY POLYETHYLENE PIPE (HDPE) - HIGH-DENSITY POLYETHYLENE (HDPE) PIPE SHALL CONFORM TO THE REQUIREMENTS OF AASHTO M 252 AND M 294. PIPE AND FITTINGS SHALL BE MADE FROM VIRGIN PE COMPOUNDS WHICH CONFORM TO THE REQUIREMENTS OF CELL CLASS 324420C AS DEFINED AND DESCRIBED IN ASTM D 3350. RUBBER GASKET JOINTS SHALL BE USED.

   f. FULLY GALVANIZED CORRUGATED STEEL PIPE - FULLY GALVANIZED CORRUGATED STEEL PIPE MAY BE USED FOR RESIDENTIAL DRIVEWAY CROSSINGS ONLY WHEN A DITCH SECTION IS PRESENT. THE MINIMUM CULVERT SIZE IS 12" DIAMETER.

2. BEDDING, OTHER THAN CONCRETE EMBEDMENT, SHALL CONSIST OF GRAVEL, CRUSHED GRAVEL, OR CRUSHED STONE 1/4 INCH TO 1 INCH IN SIZE. AS A MINIMUM, THE MATERIAL SHALL CONFORM TO THE REQUIREMENTS OF IDOT STANDARD SPECIFICATIONS. THE GRADATION SHALL CONFORM TO GRADATION CA-7 OR CA-11 OF THE STANDARD SPECIFICATIONS.

3. BACKFILL MATERIAL SHALL CONFORM TO THE REQUIREMENTS OF IDOT STANDARD SPECIFICATIONS. THE GRADATION SHALL CONFORM TO GRADATION CA-6 OF THE STANDARD SPECIFICATIONS. BACKFILL MATERIAL SHALL BE COMPACTED TO 95% STANDARD PROCTOR DENSITY.

4. JOINTS CONNECTING DISSIMILAR PIPE MATERIALS SHALL BE MADE WITH SEWER CLAMP NON-SHEAR TYPE COUPLINGS; CASCADE CSS, ROMAC LSS, FERNCO, INC. SHEAR RING, OR APPROVED EQUAL. WHEN AVAILABLE, A STANDARD JOINT WITH A TRANSITION GASKET MAY BE USED. THE NAME OF THE MANUFACTURER, CLASS, AND DATE OF ISSUE SHALL BE CLEARLY IDENTIFIED ON ALL SECTIONS OF PIPE. THE CONTRACTOR SHALL ALSO SUBMIT BILLS OF LADING, OR OTHER QUALITY ASSURANCE DOCUMENTATION WHEN REQUESTED BY THE CITY ENGINEER. ALL NUTS AND BOLTS FOR COUPLINGS SHALL BE STAINLESS STEEL.

5. MANHOLES FOR STORM SEWERS SHALL HAVE A MINIMUM INSIDE DIAMETER OF 48 INCHES AND SHALL BE CONSTRUCTED OF PRECAST CONCRETE UNITS IN ACCORDANCE WITH ASTM C478-05 (OR LATEST EDITION) AND SHALL CONFORM TO THE CITY OF NAPERVILLE STANDARD DETAIL. ALL MANHOLES SHALL BE WATER-TIGHT. ALL VISIBLE LEAKS SHALL BE SEALED IN A MANNER ACCEPTABLE TO THE CITY ENGINEER.

6. MANHOLES SHALL BE FURNISHED WITH A SELF-SEALING FRAME AND SOLID COVER (EAST JORDAN IRON WORKS 1022 WITH TYPE A SOLID COVER, OR APPROVED EQUAL) WITH THE WORD "STORM" IMPRINTED ON THE COVER IN RAISED LETTERS. ALL FRAMES AND LIDS SHALL MEET OR EXCEED AASHTO H-20 LOADING SPECIFICATIONS. FRAMES SHALL BE SHOP PAINTED WITH ASPHALTIC BASE PAINT. BOTH THE MANHOLE FRAME AND COVER SHALL HAVE MACHINED HORIZONTAL AND VERTICAL BEARING SURFACES. INVERTED MANHOLE FRAMES ARE NOT ALLOWED. PICK HOLES SHALL NOT CREATE OPENINGS IN THE MANHOLE COVER.

7. MANHOLE STEPS ON MAXIMUM 16 INCH CENTER SHALL BE FURNISHED WITH EACH MANHOLE, SECURELY ANCHORED IN PLACE, TRUE TO VERTICAL ALIGNMENT, IN ACCORDANCE WITH THE NAPERVILLE STANDARD DETAILS. STEPS SHALL BE COPOLYMER POLYPROPYLENE REINFORCED WITH 1/2 INCH A615/A615M-05A (OR LATEST EDITION) GRADE 60 STEEL REINFORCEMENT, MEETING OR EXCEEDING ASTM C 478-05 (OR LATEST EDITION) AND OSHA STANDARDS.

8. CATCH BASINS AND INLETS SHALL HAVE A MINIMUM INSIDE DIAMETER OF 24 INCHES AND SHALL BE CONSTRUCTED OF PRECAST CONCRETE UNITS IN ACCORDANCE WITH ASTM C478-05 (OR LATEST EDITION) AND SHALL CONFORM TO THE CITY OF NAPERVILLE STANDARD DETAIL. ALL CATCH BASINS AND INLETS SHALL BE WATER-TIGHT AT ALL POINTS BELOW GRADE. ALL VISIBLE LEAKS SHALL BE SEALED IN A MANNER ACCEPTABLE TO THE CITY ENGINEER. CATCH BASINS AND INLETS SHALL BE FURNISHED WITH A FRAME AND GRATE BASED UPON THE LOCATION OF THE INSTALLATION AS LISTED BELOW. ALL FRAMES AND

   GRATES SHALL MEET OR EXCEED AASHTO H-20 LOADING SPECIFICATIONS. FRAMES SHALL BE SHOP PAINTED WITH ASPHALTIC BASE PAINT.

   a. PAVEMENT: EAST JORDAN IRON WORKS 1022 FRAME WITH TYPE M1 RADIAL FLAT GRATE, OR APPROVED EQUAL.

   b. BARRIER CURB AND GUTTER: EAST JORDAN IRON WORKS 7220 FRAME WITH TYPE M1 GRATE AND T1 CURB BOX, OR APPROVED EQUAL.

   c. DEPRESSED CURB: EAST JORDAN IRON WORKS 5120 FRAME AND GRATE, OR APPROVED EQUAL.

   d. MOUNTABLE CURB: EAST JORDAN IRON WORKS 7525 FRAME AND GRATE, OR APPROVED EQUAL.

   e. NON-PAVED AREAS: EAST JORDAN IRON WORKS 6527 BEEHIVE GRATE, OR APPROVED EQUAL. ALTERNATELY, IN AREAS WHERE THERE IS THE LIKELIHOOD OF PEDESTRIAN TRAFFIC, EAST JORDAN IRON WORKS 1022 FRAME WITH TYPE M1 RADIAL FLAT GRATE, OR APPROVED EQUAL MAY BE USED.

9. ALL PIPE SHALL BE LAID TRUE TO LINE AND GRADE. DIRT AND OTHER FOREIGN MATERIAL SHALL BE PREVENTED FROM ENTERING THE PIPE OR PIPE JOINT DURING HANDLING OR LAYING OPERATIONS. ALL STORM SEWER PIPE TO PIPE CONNECTIONS SHALL BE SEALED WITH BUTYL MASTIC TO ENSURE WATER TIGHTNESS. LIFT HOLES TO BE SEALED USING BUTYL MASTIC AND CONCRETE PLUGS. AT NO TIME SHALL CONNECTIONS BETWEEN THE STORM SEWER AND SANITARY SEWER BE ALLOWED.

10. FOR STRUCTURES LOCATED IN PAVED AREAS, A MINIMUM OF FOUR, 2-INCH DIAMETER HOLES SHALL BE DRILLED OR PRECAST INTO THE STRUCTURE WITHIN 1 FOOT OF THE LOWEST PIPE INVERT. THE HOLES SHALL BE DISTRIBUTED EQUIDISTANT AROUND THE PERIMETER OF THE STRUCTURE. A 1-FOOT BY 1- FOOT SECTION OF UNDERDRAIN FILTER CLOTH MATERIAL SHALL BE SUFFICIENTLY FIXED TO THE OUTSIDE OF THE MANHOLE WITH MASTIC MATERIAL TO PREVENT SLIPPAGE DURING BACKFILLING.

    ADJUSTMENTS MAY BE NECESSARY TO ENSURE THAT FRAMES AND GRATES MATCH THE ELEVATION OF THE SURROUNDING PAVEMENT OR GROUND SURFACE. PREFORMED ADJUSTING RINGS OF THE PROPER DIMENSIONS NEEDED TO MATE THE FRAME TO THE PRECAST STRUCTURE SHALL BE USED. NO MORE THAN 12 INCHES OF VERTICAL ADJUSTMENT MAY BE MADE USING THE MINIMUM PRACTICAL NUMBER OF INDIVIDUAL RINGS.

    ALL RINGS SHALL BE HIGH DENSITY POLYETHYLENE PLASTIC (HDPE), RECYCLED RUBBER, HIGH DENSITY EXPANDING POLYSTYRENE, EXPANDED POLYPROPYLENE (EPP), OR OTHER MATERIAL AS APPROVED BY THE CITY ENGINEER. PRECAST CONCRETE RINGS, BRICKS, ROCKS, SHIMS, OR CONCRETE BLOCKS WILL NOT BE ALLOWED. TAPERED ADJUSTING RINGS SHALL BE REQUIRED WHEN THE FRAME WILL NEED TO MATCH THE SLOPE OF THE ROADWAY.

    A RESILIENT, FLEXIBLE, NON-HARDENING, PREFORMED BITUMINOUS MASTIC MATERIAL, CONSEAL 102 B OR APPROVED EQUAL, SHALL BE USED BETWEEN THE CONE OR TOP BARREL SECTION OF THE STRUCTURE AND THE ADJUSTING RINGS. A THICK BEAD OF NON-HARDENING ELASTOMERIC JOINT SEALANT CONFORMING TO ASTM C-920, TYPE S, GRADE NS, SHALL BE APPLIED BETWEEN ALL INDIVIDUAL RINGS, AND BETWEEN THE ADJUSTING RINGS AND THE FRAME. THE SEALANT OR MASTIC MATERIAL SHALL BE APPLIED IN SUCH A MANNER THAT NO SURFACE WATER OR GROUND WATER INFLOW CAN ENTER THE STRUCTURE.

    ALL STORM SEWER STRUCTURE FRAMES WITHOUT INSIDE FLANGES SHALL BE SHAPED WITH HYDRAULIC CEMENT OR ELASTOMERIC JOINT SEALANT TO FORM A FILLET TO THE STRUCTURE OR ADJUSTING RINGS AND TO MAINTAIN WATER-TIGHTNESS.

    FRAME ADJUSTMENTS SHALL BE COMPLETED IN ACCORDANCE WITH SECTIONS 602 AND 603 OF STANDARD SPECIFICATIONS FOR ROAD AND BRIDGE CONSTRUCTION, PREPARED BY THE ILLINOIS DEPARTMENT OF TRANSPORTATION, LATEST EDITION, EXCEPT AS NOTED HEREIN.

EROSION CONTROL AND DRAINAGE NOTES (GENERAL)

1. THE CONTRACTOR SHALL MAINTAIN PROPER DRAINAGE AT ALL TIMES DURING THE COURSE OF CONSTRUCTION AND PREVENT STORM WATER FROM RUNNING INTO OR STANDING IN EXCAVATED AREAS.

2. DURING EXTENDED DRY PERIODS, THE CONSTRUCTION AREA(S) MAY NEED TO BE WATERED DOWN TO PREVENT THE BLOWING OF SOIL FROM THE SITE.

3. DURING CONSTRUCTION, A STABILIZED CONSTRUCTION ENTRANCE SHALL BE UTILIZED TO MINIMIZE THE TRACKING OF DIRT ONTO THE PUBLIC STREETS. IT IS THE CONTRACTOR'S RESPONSIBILITY TO KEEP PUBLIC STREET PAVEMENT CLEAN OF DIRT AND DEBRIS. ANY DIRT THAT IS TRACKED ONTO THE PUBLIC STREETS SHALL BE REMOVED THE SAME DAY. IF THE AMOUNT TRACKED ON THE PUBLIC STREET IS EXCESSIVE, CLEANING MAY BE REQUIRED MORE FREQUENTLY.

EROSION CONTROL AND DRAINAGE NOTES (PROJECT SPECIFIC)

1. ALL EROSION CONTROL MEASURES SHALL BE PROPERLY INSTALLED, AS PERMITTED, PRIOR TO ANY LAND DISTURBANCE ACTIVITIES. ALL EROSION CONTROL SHALL BE MAINTAINED UNTIL TURF IS ESTABLISHED.

2. ACCEPTABLE PERIMETER EROSION CONTROL INCLUDES SILT FENCE, SILT WORM AND ANY OTHER APPLICATION APPROVED BY THE CITY ENGINEER.

3. ALL OPEN GRATE STRUCTURES SHALL HAVE EROSION CONTROL PROTECTION IN ACCORDANCE WITH THE APPROVED EROSION CONTROL PLANS. INLET BASKETS ARE THE PREFERRED METHOD; STRAW BALES SHALL NOT BE USED.

4. STOCKPILES NOT BEING DISTURBED FOR MORE THAN 14 DAYS SHALL BE SEEDED.

5. ALL EROSION CONTROL MEASURES SHALL BE INSPECTED WEEKLY, AFTER ANY 0.5 INCH RAINFALL, OR MORE FREQUENTLY AS NECESSARY TO MAINTAIN THEIR FUNCTION.

6. IT IS THE RESPONSIBILITY OF THE OWNER OR HIS DESIGNEE TO INSPECT ALL TEMPORARY EROSION CONTROL MEASURES PER THE REQUIREMENTS OF THE NPDES PERMIT AND CORRECT ANY DEFICIENCIES AS NEEDED.

GEOMETRIC AND PAVING NOTES (GENERAL)

1. THE DEVELOPER AND CONTRACTOR SHALL HAVE THE RESPONSIBILITY TO ADEQUATELY PROTECT THE PAVEMENT AND PROPERTY, CURB AND GUTTER AND OTHER RIGHT-OF-WAY IMPROVEMENTS, WHETHER NEWLY CONSTRUCTED OR EXISTING, FROM ANY AND ALL DAMAGE. SUFFICIENT MEANS SHALL BE EMPLOYED BY THE CONTRACTOR TO PROTECT AGAINST SUCH DAMAGE TO THE SATISFACTION OF THE CITY ENGINEER.

2. ANY NEW OR EXISTING IMPROVEMENTS THAT ARE DAMAGED SHALL BE REPAIRED OR REPLACED IN A MANNER THAT IS SATISFACTORY TO THE CITY ENGINEER.

3. THE CONTRACTOR AND/OR DEVELOPER SHALL SECURE ALL NECESSARY RIGHTS AND PERMISSIONS TO PERFORM ANY WORK ON PRIVATE PROPERTY NOT WITHIN THE OWNERSHIP RIGHTS OF THE DEVELOPER. THE DEVELOPER SHALL BEAR THE SOLE RESPONSIBILITY FOR DAMAGES THAT MAY OCCUR AS A RESULT OF WORK PERFORMED UNDER CONTRACTS THEY INITIATE.

4. THE CONTRACTOR/DEVELOPER WILL BE RESPONSIBLE FOR BRINGING PAVEMENTS (STREET, CURB AND GUTTER, SIDEWALK, DRIVEWAY) ON THE PROPERTY UP TO CITY STANDARDS INCLUDING ANY REPAIRS TO SUBSTANDARD PAVEMENTS THAT EXISTED PRIOR TO OR OCCURRED DURING CONSTRUCTION.

5. WHEREVER NEW WORK WILL MEET EXISTING CONDITIONS OTHER THAN LAWN AREAS, REGARDLESS OF WHETHER THE NEW OR EXISTING WORK IS ASPHALT OR CONCRETE, THE EXISTING ADJACENT SIDEWALK, DRIVEWAYS, PAVEMENT OR CURB SHALL BE NEATLY SAW CUT. THE SAW CUT SHALL BE IN A NEAT STRAIGHT LINE SUFFICIENTLY DEEP SO THAT IT RENDERS A SMOOTH VERTICAL FACE TO MATCH TO. IF THE CONTRACTOR IS NOT CAREFUL OR DOES NOT SAW DEEP ENOUGH AND THE CUT LINE BREAKS OUT OR CHIPS TO AN IMPERFECT EDGE, THEN THE EXISTING SIDE MUST BE RE-CUT SQUARE AND DONE OVER UNTIL IT IS CORRECT.

TRAFFIC CONTROL AND PROTECTION NOTES (GENERAL)

1. ALL DEVELOPERS AND CONTRACTORS SHALL PROVIDE SUITABLE TRAFFIC CONTROL FOR THEIR CONSTRUCTION ACTIVITIES IN ACCORDANCE WITH PART 6 OF THE MANUAL ON UNIFORM TRAFFIC CONTROL DEVICES (MUTCD), LATEST EDITION. TRAFFIC CONTROL MUST BE PROVIDED FOR ANY ACTIVITY THAT IMPACTS TRAFFIC FLOW. THIS INCLUDES, BUT IS NOT LIMITED TO, ROAD CLOSURES REQUIRING DETOURS, DAILY LANE CLOSURES, LONG TERM LANE CLOSURES, NARROW LANES, AND CONSTRUCTION VEHICLES ENTERING AND EXITING THE PUBLIC ROADWAY. ALL TRAFFIC CONTROL SET- UPS MAY BE INSPECTED BY THE CITY OF NAPERVILLE TO ENSURE THAT THEY ARE PROVIDING POSITIVE GUIDANCE TO MOTORISTS AND ARE NOT IN THEMSELVES PRESENTING A HAZARDOUS SITUATION. A REPRESENTATIVE OF THE DEVELOPER OR CONTRACTOR MUST PROVIDE PHONE NUMBERS AT WHICH THEY CAN BE REACHED 24 HOURS A DAY AND ON WEEKENDS SO THAT THEY CAN MAINTAIN TRAFFIC CONTROL DEVICES.

2. PEDESTRIANS MUST BE PROVIDED WITH A SAFE ALTERNATE ROUTE IF PEDESTRIAN FACILITIES ARE TO BE CLOSED AS A RESULT OF CONSTRUCTION ACTIVITIES. GUIDANCE MUST BE PROVIDED TO PEDESTRIANS SO THAT THEY MAY AVOID THE WORK ZONE. SAID PEDESTRIAN DETOUR PLAN (WITH SIGNAGE) IS TO BE REVIEWED AND ACCEPTED BY THE CITY IN WRITING, PRIOR TO THE COMMENCEMENT OF THE WORK.

3. THE CONTRACTOR SHALL EMPLOY THE APPROPRIATE METHODS OF TRAFFIC CONTROL IN ACCORDANCE WITH THE PLANS, SPECIFICATIONS AND THE MANUAL ON UNIFORM TRAFFIC CONTROL DEVICES, SUCH THAT THE SAFETY OF VEHICLES, AND PEDESTRIANS IS PRESERVED AT ALL TIMES. THE ERECTION AND MAINTENANCE OF THE TRAFFIC CONTROL DEVICES SHALL BE TO THE SATISFACTION OF THE AGENCY OF JURISDICTION AND THE CITY ENGINEER.

4. ANY TEMPORARY OPEN HOLES SHOULD BE BARRICADED AND PROTECTED IN ACCORDANCE WITH APPLICABLE STANDARDS.

5. A MINIMUM 72 HOUR NOTICE IS REQUIRED FOR TRAFFIC CONTROL THAT REDUCES THE WIDTH OF A TRAVEL LANE LESS THAN 12 FEET OR CLOSES A LANE. APPROVAL FROM THE CITY ENGINEER WILL BE REQUIRED PRIOR TO THE IMPLEMENTATION OF SUCH TRAFFIC CONTROL LAYOUT.

6. LANE CLOSURES ON ARTERIAL ROADWAYS WITHIN THE CITY OF NAPERVILLE ARE NOT PERMITTED BETWEEN THE HOURS OF 6AM-9AM AND 3PM-7PM MONDAY THROUGH FRIDAY, UNLESS OTHERWISE PERMITTED BY THE CITY ENGINEER. LANE CLOSURES ON ARTERIAL STREETS ARE PERMITTED BETWEEN 7AM AND 7PM ON WEEKENDS, UNLESS OTHERWISE PERMITTED BY THE CITY ENGINEER. ARTERIAL ROADWAYS ARE DEFINED AS BOTH MAJOR AND MINOR ARTERIAL ROADWAYS AS DESIGNATED ON THE CITY’S MASTER THOROUGHFARE PLAN, LATEST EDITION.

7. ANY WORK THAT IMPACTS A TRAFFIC LANE ON AN ARTERIAL ROADWAY REQUIRES AN ARROWBOARD AS PART OF THE TRAFFIC CONTROL.

8. AT THE END OF EACH DAY OF WORK, THE ROADWAY MUST BE COMPLETELY REOPENED TO TRAFFIC. ANY OPEN HOLES MUST BE PLATED OR COLD PATCHED; THE CITY WILL NOT ALLOW THE HOLES TO BE FILLED WITH GRAVEL.

1 DEPARTMENT OF PUBLIC UTILITIES - ELECTRIC GENERAL NOTES

1. THE DPUE ENGINEER FOR THIS PROJECT IS GIOVANNI HERNANDEZ. PLEASE CONTACT HIM AT (630)-548-1212 WITH ANY QUESTIONS REGARDING THE ELECTRIC SERVICE.

2. THE DEVELOPER SHALL SUPPLY THE DPU-E ENGINEER WITH CATALOG CUTS FOR ALL CT/METER EQUIPMENT (INCLUDING BUT NOT LIMITED TO METER SOCKETS, PT CABINET, CT CABINET, DISCONNECT CABINET) AND TRANSFORMER PAD/VAULT. THE CATALOG CUTS SHALL BE APPROVED BY DPU-E PRIOR TO PURCHASING.

3. THE CT/METER CABINET SHALL BE TOP FED.

4. CT/METER EQUIPMENT ARE LONG LEAD TIME ITEMS AND DPU-E SHALL NOT BE HELD RESPONSIBLE FOR DELAYS RESULTING FROM NON-COMPLIANT CT/METER EQUIPMENT.

5. PLEASE PROVIDE NAME AND CONTACT INFORMATION FOR ELECTRICAL CONTRACTOR FOR THIS PROJECT.

6. DPUE WILL PROVIDE, INSTALL, AND MAINTAIN THE TRANSFORMERS, ALL PRIMARY (15KV) CABLE AND CONDUIT, AND THE METERS AND INSTRUMENT TRANSFORMERS. DPUE WILL ALSO MAKE THE FINAL CONNECTIONS IN THE TRANSFORMERS ONCE THE INSPECTION IS COMPLETE AND THE BUILDING IS READY TO BE ENERGIZED.

7. THE DEVELOPER IS RESPONSIBLE FOR PROVIDING, INSTALLING, AND MAINTAINING THE TRANSFORMER PAD/VAULT, ALL SERVICE LATERAL (480V) CABLE AND CONDUIT, THE SERVICE ENTRANCE EQUIPMENT INCLUDING THE CT/METER CABINET AND ALL BANKED METER SOCKETS.

8. THE DEVELOPER SHALL COORDINATE SITE CONSTRUCTION WITH DPU-E TO ALLOW ELECTRIC FACILITIES TO BE INSTALLED PRIOR PAVING AND CURBING. DPU-E REQUIRES 30 WORKING DAYS ADVANCE WRITTEN NOTICE PRIOR TO PAVEMENT INSTALLATION TO ALLOW FOR THE INSTALLATION OF ELECTRIC FACILITIES. GRADE ELEVATION MUST BE WITHIN 4" OF FINAL GRADING BEFORE ELECTRIC FACILITIES CAN BE INSTALLED.

9. ELECTRIC FACILITIES SHALL BE INSTALLED PURSUANT TO SECTION 8-1C-3 OF THE CITY OF NAPERVILLE MUNICIPAL CODE, WHICH REQUIRES A CONSTRUCTION FEE PAYMENT FOR INSTALLATION OF ELECTRIC FACILITIES.

10. AT ALL TIMES, THE CUSTOMER SHALL BE SOLELY RESPONSIBLE FOR MAINTAINING A SUITABLE APPROACH TO THE METER LOCATION, WITH NO OBSTRUCTIONS WITHIN FOUR (4') FEET OF THE FRONT AND TWO (2') FEET OF THE SIDES OF THE METER. PER NAPERVILLE SERVICE RULES AND POLICIES 22.2.F.

11. CLEARANCE TO TRANSFORMER PAD SHALL BE 5' FROM ALL SIDES, 10' FROM FRONT, AND THE AREA ABOVE MUST BE COMPLETELY CLEAR OF OBSTRUCTION. NO TREES, SHRUBS, OR OTHER OBSTACLES WILL BE ALLOWED WITHIN THIS AREA. TRANSFORMER PAD SHALL MAINTAIN MINIMUM CLEARANCE OF 20' FROM EGRESS POINTS. PER DPUE SPECIFICATIONS C10-2130 AND C30-0016.

12. DPU-E REQUIRES A MINIMUM 5' OF SEPARATION BETWEEN ITS ELECTRIC FACILITIES AND ANY FIRE HYDRANTS STORM DRAINS, STORM SEWERS, WATER MAINS, GAS MAINS, ETC. THAT RUN PARALLEL TO ITS FACILITIES.

13. TO HAVE AN EXISTING SERVICE DISCONNECTED CALL THE CITY DISPATCH OFFICE AT 630-420-6187. PLEASE ALLOW AT LEAST 24 HOURS' NOTICE. METERS AND METER SEALS ARE TO BE REMOVED ONLY BY DPU-E PERSONNEL. THE LOCATION AND TYPE OF NEW OR REPLACEMENT METER RELATED EQUIPMENT MUST BE PRE-APPROVED IN WRITING BY DPU-E. AN ELECTRIC SERVICE MUST BE INSPECTED BY THE DEVELOPMENT SERVICES TEAM ELECTRICAL INSPECTOR PRIOR TO CONNECTION.

14. LABEL ALL METER SOCKETS WITH THE COMPLETE ADDRESS IN 1" LETTERS USING PERMANENT STICKERS. IN MULTIPLE METER BANKS, THE COMPLETE ADDRESS MAY BE ON THE DISCONNECT SWITCH AND THE SUITE NUMBERS ON THE METER SOCKETS. THE ELECTRICAL SERVICE EQUIPMENT WILL NOT PASS INSPECTION WITHOUT APPROPRIATE ADDRESS LABELING.

15. APPROVAL OF METERING EQUIPMENT BY DPU-E DOES NOT REMOVE YOUR RESPONSIBILITY TO COMPLY WITH THE LATEST VERSION OF THE NATIONAL ELECTRICAL CODE AS ADOPTED BY THE CITY OF NAPERVILLE. DETERMINATION OF COMPLIANCE WITH THE NATIONAL ELECTRICAL CODE WILL BE MADE BY THE TRANSPORTATION, ENGINEERING AND DEVELOPMENT DEPARTMENT.

16. A CUSTOMER'S GROUNDING CONDUCTOR SHALL NOT BE CONNECTED TO DPU-E DISTRIBUTION EQUIPMENT.

17. DPU-E WILL INSTALL AND ENERGIZE ALL METERS IN A MULTIPLE METER BANK AT ONE TIME, PROVIDED ALL METER SOCKETS PASS INSPECTION. IN THE EVENT OF AN INCOMPLETE INSTALLATION, ONLY THE INSPECTED AND APPROVED EQUIPMENT SHALL BE ENERGIZED AND A METER INSTALLED. INDIVIDUAL TENANT PERMITS WILL BE REQUIRED FOR INSTALLATION OF THE OTHER METERS IN THE METER BANK.

18. DUE TO SUPPLY CHAIN ISSUES DPU-E IS EXPERIENCING LONG LEAD TIMES (+400 DAYS) ON TRANSFORMERS. PLEASE TAKE THIS INTO CONSIDERATION WHEN PLANNING CONSTRUCTION.

19. PLEASE IDENTIFY PREFERRED VOLTAGE LEVEL. 1-PHASE 120/240, 1-PHASE 120/208, 3-PHASE 120/208V OR, 3-PHASE 277/480V? PLEASE COMPLETED A SERVICE LOADING SPREADSHEET FOR EACH BUILDING AND RETURN TO THE DPUE ENGINEER.

20. THE TRANSFORMER MUST BE SHOWN ON THE SITE PLAN AND SHOULD BE LOCATED BETWEEN 8' AND 50' FROM COMMERCIAL BUILDINGS. METERS, INSTRUMENTAL TRANSFORMERS, AND MAIN DISCONNECT SHALL BE LOCATED WITHIN 50' OF THE TRANSFORMERS AND SHALL BE INSTALLED ON THE EXTERIOR OF THE BUILDING. IF THE TRANSFORMER WILL BE LOCATED AT A DISTANCE GREATER THAN 50', THEN THE METERING CABINET AND MAIN DISCONNECT MUST BE FREE STANDING AND LOCATED BETWEEN 10' AND 15' OF THE TRANSFORMERS. THE INSTRUMENT TRANSFORMERS AND MAIN DISCONNECT MAY BE INSTALLED INSIDE THE BUILDING IF THE SERVICE ENTRANCE CAPACITY IS 1200 AMPS OR GREATER. METERS SHALL BE INSTALLED ON THE BUILDING EXTERIOR.

21. TO HAVE AN EXISTING SERVICE DISCONNECTED CALL THE CITY DISPATCH OFFICE AT 630-420-6187. PLEASE ALLOW AT LEAST 24 HOURS' NOTICE. METERS AND METER SEALS ARE TO BE REMOVED ONLY BY DPU-E PERSONNEL. THE LOCATION AND TYPE OF NEW OR REPLACEMENT METER RELATED EQUIPMENT MUST BE PRE-APPROVED IN WRITING BY DPU-E. AN ELECTRIC SERVICE MUST BE INSPECTED BY THE DEVELOPMENT SERVICES TEAM ELECTRICAL INSPECTOR PRIOR TO CONNECTION.

REVISION RECORD

NO	DATE	DESCRIPTION
1	01-27-23	REVISED PER CITY REVIEW, DATED 01-13-23

Civil & Environmental Consultants, Inc.
1230 East Diehl Road, Suite 200 - Naperville, IL 60563
630-963-6026 · 877-963-6026
www.cecinc.com

MIKOLS CONSTRUCTION, INC.
RIVERWALK PLACE
415 W JACKSON AVENUE
NAPERVILLE, ILLINOIS 60540

SITE SPECIFICATIONS - 3

DATE:	12/07/2022	DRAWN BY:	SRH
DWG SCALE:	NONE	CHECKED BY:	JGC
PROJECT NO:	320-614.3AW00		
APPROVED BY:	JGC		

DRAWING NO.: C003

P:\320-000\320-614\-CADD\Dwg\FINAL ENGINEERING\320614-CV01-C001-C002-SITE SPECIFICATIONS.dwg{C003} LS:(1/27/2023 - mjung) - LP: 1/27/2023 2:20 PM

NORTH

LEGAL DESCRIPTION

THE SOUTH HALF OF LOTS 10 AND 11 IN BLOCK 2, PLAT OF TOWN OF NAPERVILLE, A SUBDIVISION IN THE SOUTH HALF OF SECTION 13, TOWNSHIP 38 NORTH, RANGE 9, EAST OF THE THIRD PRINCIPAL MERIDIAN, ACCORDING TO THE PLAT THEREOF RECORDED FEBRUARY 15, 1842 AS DOCUMENT 131, IN DUPAGE COUNTY, ILLINOIS.

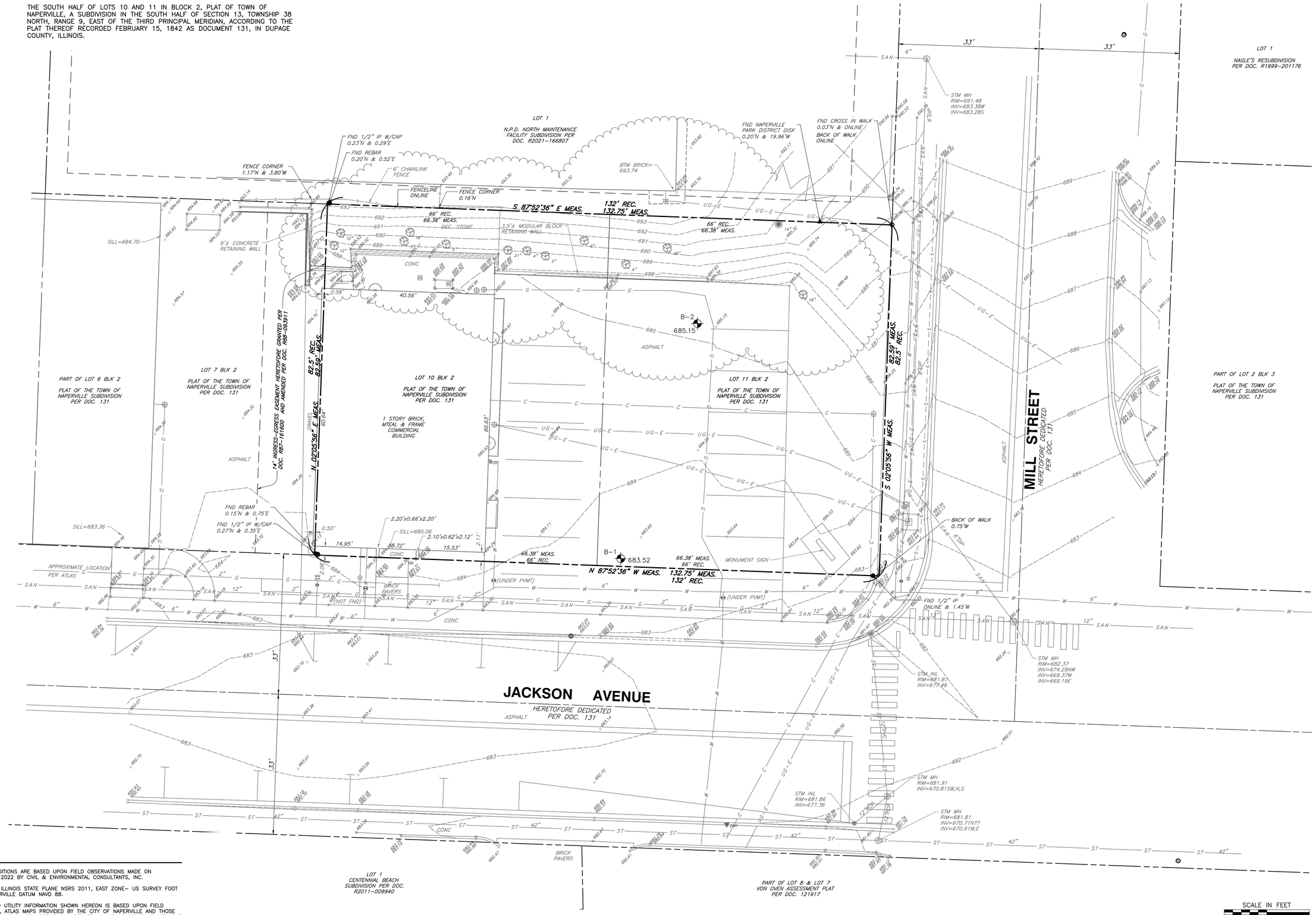

REFERENCE

1. EXISTING CONDITIONS ARE BASED UPON FIELD OBSERVATIONS MADE ON OCTOBER 10, 2022 BY CIVIL & ENVIRONMENTAL CONSULTANTS, INC.

1. FIELD DATUM: ILLINOIS STATE PLANE NSRS 2011, EAST ZONE– US SURVEY FOOT CITY OF NAPERVILLE DATUM NAVD 88.

2. UNDERGROUND UTILITY INFORMATION SHOWN HEREON IS BASED UPON FIELD OBSERVATIONS, ATLAS MAPS PROVIDED BY THE CITY OF NAPERVILLE AND THOSE PUBLIC UTILITY COMPANIES OPERATING UNDER FRANCHISE OR CONTRACT WITH THE CITY OF NAPERVILLE.

P:\320-001\320-614-CAD\Dwg\FINAL ENGINEERING\320614-CV01-C100-EXISTING CONDITIONS.dwg(C100) LS:(12/12/2023 - mjung) - LP: 1/27/2023 2:20 PM

REVISION RECORD

NO	DATE	DESCRIPTION
1	01/27/23	NO REVISIONS THIS SHEET

Civil & Environmental Consultants, Inc.
1230 East Diehl Road, Suite 200 - Naperville, IL 60563
630-963-6026 · 877-963-6026
www.cecinc.com

MIKOLS CONSTRUCTION, INC.
RIVERWALK PLACE
415 W JACKSON AVENUE
NAPERVILLE, ILLINOIS 60540

EXISTING CONDITIONS

DATE:	12/07/2022	DRAWN BY:	SRH
DWG SCALE:	1" = 10'	CHECKED BY:	JGC
PROJECT NO:		320-614.3AW00	
APPROVED BY:			JGC

DRAWING NO.: C100

SHEET 5 OF 12

NORTH

DEMOLITION NOTES:

1. ALL PAVEMENTS, UTILITIES, TREES, ETC. WITHIN THE SUBJECT PROPERTY SHALL BE COMPLETELY REMOVED. REMOVAL ITEMS SHOWN OUTSIDE OF THE PROPERTY LIMITS ARE APPROXIMATE AND MAY OR MAY NOT CONSTITUTE ALL WORK NECESSARY TO CONSTRUCT THE PROJECT. REMOVAL OF PUBLIC SIDEWALKS, ROADWAYS, DRIVEWAYS, CURB & GUTTER, PUBLIC UTILITIES, ETC., SHALL BE STAGED BY THE CONTRACTOR WITH CONCURRENCE FROM THE OWNER, ENGINEER, AND THE CITY OF NAPERVILLE STAFF.
2. TRENCHES, WITHIN PROPOSED PAVED OR BUILDING PAD AREAS, RESULTING FROM THE REMOVAL OF EXISTING UTILITIES SHALL BE BACKFILLED IN ACCORDANCE WITH THE APPLICABLE REQUIREMENTS OF ART. 550.07 OF THE IDOT STANDARD SPECIFICATIONS FOR ROAD AND BRIDGE CONSTRUCTION.
3. ALL EXISTING PAVEMENT WITHIN THE CONSTRUCTION LIMITS, INCLUDING BITUMINOUS PAVEMENT, DRIVEWAYS, CONCRETE SLABS, AND SIDEWALKS SHALL BE COMPLETELY REMOVED. AGGREGATE MATERIALS APPROVED AS SUITABLE FILL BY THE SOILS ENGINEER SHALL BE SET ASIDE FOR FUTURE PLACEMENT.
4. ALL TREES, LANDSCAPE MATERIALS AND BRUSH WITHIN THE CONSTRUCTION LIMITS SHALL BE REMOVED. TREE STUMPS AND/OR ROOT BALLS SHALL BE COMPLETELY REMOVED. TREES TO REMAIN SHALL BE PROTECTED FROM CONSTRUCTION ACTIVITY. THE CONTRACTOR SHALL VISIT THE SITE PRIOR TO FINALIZING HIS BID FOR TREE REMOVAL.
5. THE DURATION OF THE PUBLIC SIDEWALK CLOSURE SHALL BE KEPT TO A MINIMUM. SIDEWALK CLOSURE SHALL BE IN ACCORDANCE WITH IDOT STANDARD 701801. SIDEWALK CLOSURES SHALL DIRECT PEDESTRIANS TO CROSS AT THE WEST STREET AND ROTARY HILL TRAFFIC SIGNALS.
6. THE CONTRACTOR SHALL COORDINATE WITH THE VARIOUS UTILITY COMPANIES TO INSURE THAT SERVICE IS PROVIDED TO ADJACENT PROPERTIES DURING CONSTRUCTION. ALL MATERIAL, EXCEPT THAT BELONGING TO A PUBLIC UTILITY COMPANY OR DENOTED FOR SALVAGE, SHALL BECOME THE PROPERTY OF THE CONTRACTOR. THE CONTRACTOR SHALL NOTIFY THE OWNER(S) OF WATER, ELECTRIC, OR GAS METERS WHEN THE METERS ARE READY FOR REMOVAL. THE CONTRACTOR SHALL BE RESPONSIBLE FOR DISCONNECTING ALL UTILITIES IN COMPLIANCE WITH LOCAL REQUIREMENTS. DISCONNECT TRANSFORMERS AS REQUIRED FOR BUILDING DEMOLITION.

   THE EXISTING DOMESTIC AND FIRE SERVICE SCHEDULED FOR REMOVAL SHALL BE CAPPED AT THE MAIN IN ACCORDANCE WITH CITY STANDARDS. THE CONTRACTOR SHALL COORDINATE WITH DPU–W&WW FOR VALVE CLOSURE / WATERMAIN ISOLATION SO THE WORK CAN BE PERFORMED. THE EXISTING B-BOX SHALL BE REMOVED.

   PER INFORMATION PROVIDED BY DPU–W&WW, THE EXISTING SANITARY SERVICE HAS BEEN CIPP LINED. A DEPTH OF 6 FEET HAS BEEN ASSUMED AT THE EXISTING CLEANOUT SCHEDULED FOR REMOVAL. THE CONTRACTOR SHALL VERIFY THE DEPTH PRIOR TO ORDERING THE PROPOSED SANITARY MANHOLE. HE/SHE SHALL ALSO TELEVISE THE REMAINING SERVICE SOUTH OF THE MANHOLE AND RECEIVE APPROVAL FROM DPU–W&WW PRIOR TO REUSE. IF THE SERVICE IS NOT BEING REUSED, IT SHALL BE TERMINATED AT THE MAIN USING A STAINLESS STEEL REPAIR CLAMP, MODEL CR1 AS MANUFACTURED BY CASCADE WATERWORKS OR APPROVED EQUAL.
7. AS SOON AS DEMOLITION WORK HAS BEEN COMPLETED, THE FINAL GRADE OF BACKFILL IN DEMOLITION AREAS SHALL BE COMPACTED PER THE GEOTECHNICAL REPORT TO PRESENT A NEAT, WELL DRAINED APPEARANCE, AND TO PREVENT WATER FROM DRAINING UNNECESSARILY ONTO ADJACENT PROPERTIES.
8. EXISTING UTILITY LOCATIONS ARE BASED ON THE BEST AVAILABLE INFORMATION. THE CONTRACTOR IS RESPONSIBLE FOR VERIFYING ALL EXISTING UTILITY LOCATIONS PRIOR TO CONSTRUCTION. THE CONTRACTOR SHALL BE SOLELY RESPONSIBLE FOR ANY DAMAGE TO EXISTING UTILITIES THAT ARE INTENDED TO CONTINUE TO PROVIDE SERVICE WHETHER THESE UTILITIES ARE SHOWN ON THE PLANS OR NOT. THIS SHALL INCLUDE PRIVATE SERVICES AS WELL.
9. ALL DEBRIS FROM DEMOLITION SHALL BE HAULED OFF SITE AND DISPOSED OF BY LEGAL MEANS.
10. ALL WORK SHALL BE DONE IN GENERAL ACCORDANCE WITH THE STANDARDS AND REQUIREMENTS CONTAINED IN THE MUNICIPAL "SOIL EROSION AND SEDIMENTATION CONTROL" ORDINANCE. THE CONTRACTOR SHALL INSTALL THE NECESSARY EROSION AND SEDIMENTATION CONTROL DEVICES THAT WILL PROTECT THE EXISTING STORM SEWERS, PUBLIC ROADWAYS, AND ADJACENT PROPERTIES FROM SEDIMENT THAT MAY ARISE FROM THE PROPOSED DEMOLITION AND/OR CONSTRUCTION. DEVICES SHALL INCLUDE SILT FENCE, FILTER BASKETS INSERTED INTO DRAINAGE STRUCTURES, CONSTRUCTION ENTRANCE, PAVEMENT CLEANING, ETC. THE COST OF THIS WORK WILL NOT BE PAID FOR SEPARATELY BUT SHALL BE CONSIDERED INCIDENTAL TO THE CONTRACT.
11. DURING DEWATERING OPERATIONS, WATER WILL BE PUMPED INTO SEDIMENT BASINS OR SILT TRAPS. CONCRETE TRUCKS SHALL NOT BE PERMITTED TO WASH OUT OR DISCHARGE SURPLUS CONCRETE OR DRUM WASH WATER ON SITE. SPECIFIC AREAS FOR THIS ACTIVITY SHALL BE DESIGNATED BY THE CONTRACTOR AND PROVIDED WITH ADEQUATE SILTATION BASINS AND OTHER FACILITIES TO ASSURE THAT DISCHARGE IS CONTAINED AND CLEANSED BEFORE ENTERING THE RECEIVING STORM SEWER SYSTEM.
12. ALL ADJACENT STREETS SHOULD BE KEPT CLEAR OF MUD/DEBRIS. THE CONTRACTOR SHALL INSPECT THE STREETS DAILY AND CLEAN THEM AS NECESSARY.
13. A TEMPORARY CHAINLINK CONSTRUCTION FENCE AND GATE ARE SHOWN AT THE PROPOSED CONSTRUCTION ENTRANCE. THE FENCE WILL BE REMOVED AND REPLACED AS REQUIRED TO ALLOW FOR UTILITY INSTALLATIONS, ROADWAY WORK, ETC. DURING WORKING HOURS BUT SHALL BE REINSTALLED AT THE END OF EACH DAY TO PROVIDE A SECURE CONSTRUCTION SITE.
14. TO HAVE AN EXISTING SERVICE DISCONNECTED, CALL THE CITY DISPATCH OFFICE AT 630–420–6187. PLEASE ALLOW AT LEAST 24 HOURS NOTICE. METERS AND METER SEALS ARE TO BE REMOVED ONLY BY DPU–E PERSONNEL. THE LOCATION AND TYPE OF NEW OR REPLACEMENT METER RELATED EQUIPMENT MUST BE PRE–APPROVED IN WRITING BY DPU–E. AN ELECTRIC SERVICE MUST BE INSPECTED BY THE DEVELOPMENT SERVICES TEAM ELECTRICAL INSPECTOR PRIOR TO CONNECTION.

REFERENCE

1. EXISTING CONDITIONS ARE BASED UPON FIELD OBSERVATIONS MADE ON OCTOBER 10, 2022 BY CIVIL & ENVIRONMENTAL CONSULTANTS, INC.
1. FIELD DATUM: ILLINOIS STATE PLANE NSRS 2011, EAST ZONE– US SURVEY FOOT CITY OF NAPERVILLE DATUM NAVD 88.
2. UNDERGROUND UTILITY INFORMATION SHOWN HEREON IS BASED UPON FIELD OBSERVATIONS, ATLAS MAPS PROVIDED BY THE CITY OF NAPERVILLE AND THOSE PUBLIC UTILITY COMPANIES OPERATING UNDER FRANCHISE OR CONTRACT WITH THE CITY OF NAPERVILLE.

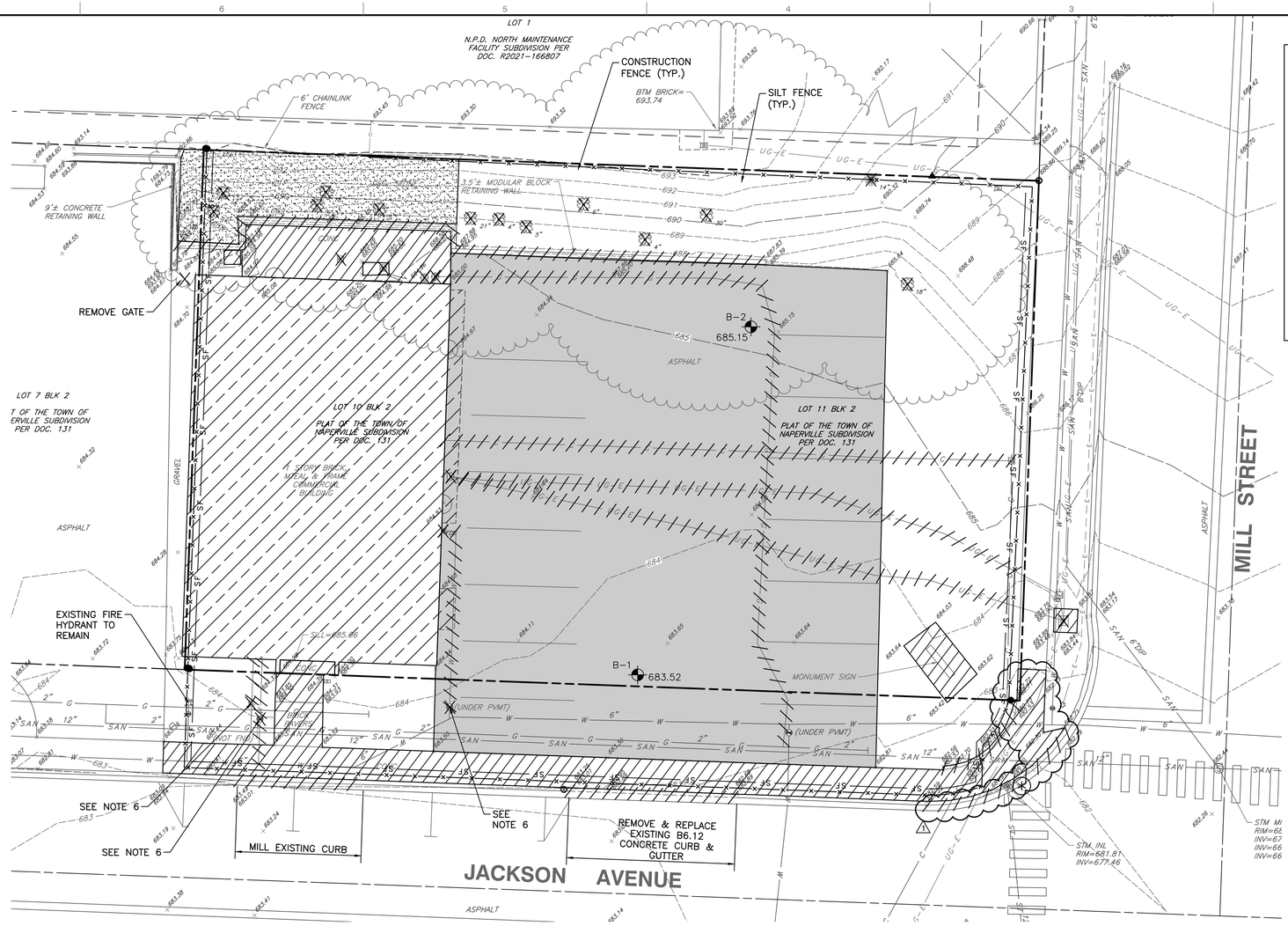

DEMOLITION LEGEND

- BITUMINOUS PAVEMENT REMOVAL
- BUILDING REMOVAL
- DECORATIVE STONE REMOVAL
- INDICATES CONCRETE ITEM, DEC. STONE, RETAINING WALL OR UTILITY SERVICE TO BE REMOVED
- INDICATES NON–CONCRETE ITEM, STRUCTURE, OR TREE TO BE REMOVED
- SILT FENCE
- CONSTRUCTION FENCE (CHAIN LINK)
- FILTER BASKET

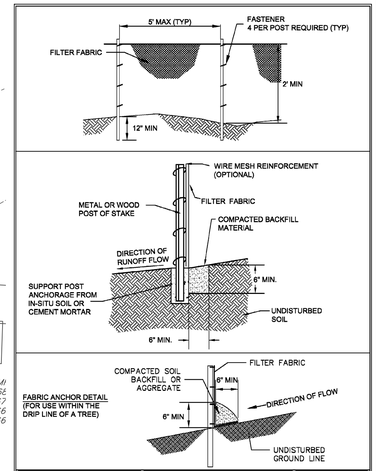

City of Naperville STANDARD DETAIL | TEMPORARY EROSION CONTROL MEASURE - SILT FENCE | REVISED: 01/01/2013 | SHEET 1 OF 2 | LANDSCAPE 3 | 790.03

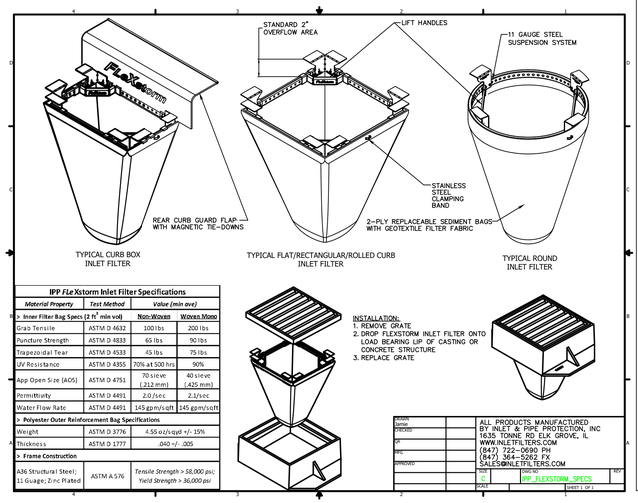

IPP FLEXstorm Inlet Filter Specifications		
Material Property	Test Method	Value (min ave)
> Inner Filter Bag Specs (2 ft² min vol)		Non-Woven / Woven Mono
Grab Tensile	ASTM D 4632	100 lbs / 200 lbs
Puncture Strength	ASTM D 4833	65 lbs / 90 lbs
Trapezoidal Tear	ASTM D 4533	45 lbs / 75 lbs
UV Resistance	ASTM D 4355	70% at 500 hrs / 90%
App Open Size (AOS)	ASTM D 4751	70 sieve (.212 mm) / 40 sieve (.425 mm)
Permittivity	ASTM D 4491	2.0 /sec / 2.1/sec
Water Flow Rate	ASTM D 4491	145 gpm/sqft / 145 gpm/sqft
> Polyester Outer Reinforcement Bag Specifications		
Weight	ASTM D 3776	4.50 oz/sqyd +/- 15%
Thickness	ASTM D 1777	.040 +/- .005
> Frame Construction		
A36 Structural Steel; 11 Guage; Zinc Plated	ASTM A 576	Tensile Strength > 58,000 psi; Yield Strength > 36,000 psi

DRAWN: Jamie | CHECKED: | QA: | REV: | APPROVED:
ALL PRODUCTS MANUFACTURED BY: INLET & PIPE PROTECTION, INC
1635 TONNE RD ELK GROVE, IL
WWW.INLETFILTERS.COM
(847) 722–0690 PH
(847) 364–5262 FX
SALES@INLETFILTERS.COM
SIZE: C | DWG NO: IPP_FLEXSTORM_SPECS | REV:
SCALE: NONE | SHEET 1 OF 1

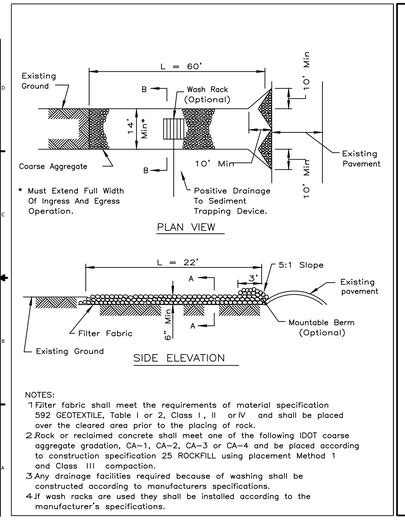

NOTES:
1. Filter fabric shall meet the requirements of material specification 592 GEOTEXTILE, Table I or 2, Class I, II or IV and shall be placed over the cleared area prior to the placing of rock.
2. Rock or reclaimed concrete shall meet one of the following IDOT coarse aggregate gradation, CA–1, CA–2, CA–3 or CA–4 and be placed according to construction specification 25 ROCKFILL using placement Method 1 and Class III compaction.
3. Any drainage facilities required because of washing shall be constructed according to manufacturers specifications.
4. If wash racks are used they shall be installed according to the manufacturer's specifications.

TEMPORARY CONCRETE WASHOUT FACILITY

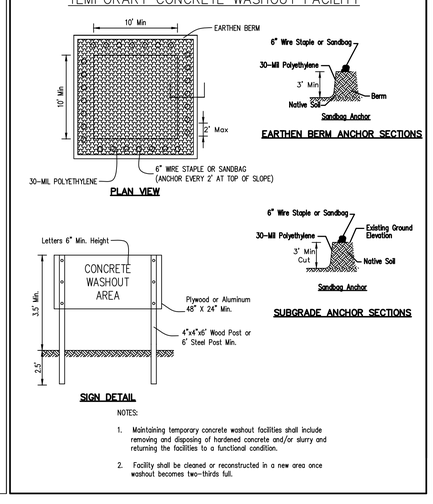

NOTES:
1. Maintaining temporary concrete washout facilities shall include removing and disposing of hardened concrete and/or slurry and returning the facilities to a functional condition.
2. Facility shall be cleaned or reconstructed in a new area once washout becomes two–thirds full.

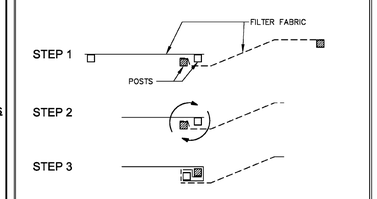

STEPS FOR THE ATTACHMENT OF TWO SILT FENCES:
1. PLACE THE END POST OF THE SECOND FENCE INSIDE THE END POST OF THE FIRST FENCE.
2. ROTATE BOTH POSTS AT LEAST 180 DEGREESIN A CLOCKWISE DIRECTION TO CREATE A TIGHT SEAL WITH THE FABRIC MATERIAL
3. DRIVE BOTH POSTS A MINIMUM OF 18 INCHES INTO THE GROUND AND BURY THE FLAP.

NOTES:
1. TEMPORARY SILT FENCE SHALL BE INSTALLED PRIOR TO ANY GRADING WORK IN THE AREA TO BE PROTECTED. THEY SHALL BE MAINTAINED THROUGHOUT THE CONSTRUCTION PERIOD AND REMOVED IN CONJUNCTION WITH THE FINAL GRADING AND SITE STABILIZATION.
2. FILTER FABRIC SHALL MEET THE REQUIREMENTS OF MATERIAL SPECIFICATION 592 GEOTEXTILE TABLE I OR 2, CLASS I WITH EQUIVALENT OPENING SIZE OF AT LEAST 30 FOR NON-WOVEN OR 50 FOR WOVEN.
3. FENCE POSTS SHALL BE EITHER STANDARD STEEL POST OR WOOD POST WITH A MINIMUM CROSS-SECTIONAL AREA OF 3.0 SQ. IN.
4. DEPENDING UPON THE CONFIGURATION, ATTACH FABRIC AND WIRE MESH WITH HOG RINGS, STEEL POST WITH TIE WIRES, WOOD POST WITH NAILS.

City of Naperville STANDARD DETAIL | TEMPORARY EROSION CONTROL MEASURE - SILT FENCE | REVISED: 01/01/2013 | SHEET 2 OF 2 | LANDSCAPE 3 | 790.03

SCALE IN FEET 0 10 20

REVISION RECORD

NO	DATE	DESCRIPTION
1	01-27-23	REVISED PER CITY REVIEW, DATED 01-13-23

Civil & Environmental Consultants, Inc.
1230 East Diehl Road, Suite 200 - Naperville, IL 60563
630-963-6026 · 877-963-6026
www.cecinc.com

MIKOLS CONSTRUCTION, INC.
RIVERWALK PLACE
415 W JACKSON AVENUE
NAPERVILLE, ILLINOIS 60540

DEMOLITION AND SOIL EROSION & SEDIMENTATION CONTROL PLAN

DATE:	12/07/2022	DRAWN BY: SRH
DWG SCALE:	1" = 10'	CHECKED BY: JGC
PROJECT NO:		320-614.3AW00
APPROVED BY:		JGC

DRAWING NO.: C101
SHEET 6 OF 12

P:\320-000\320-614\-CADD\Dwg\FINAL ENGINEERING\320614CV01-C101-DEMOLITION.dwg(C101) LS:(1/27/2023 - mjung) - LP: 1/27/2023 2:21 PM

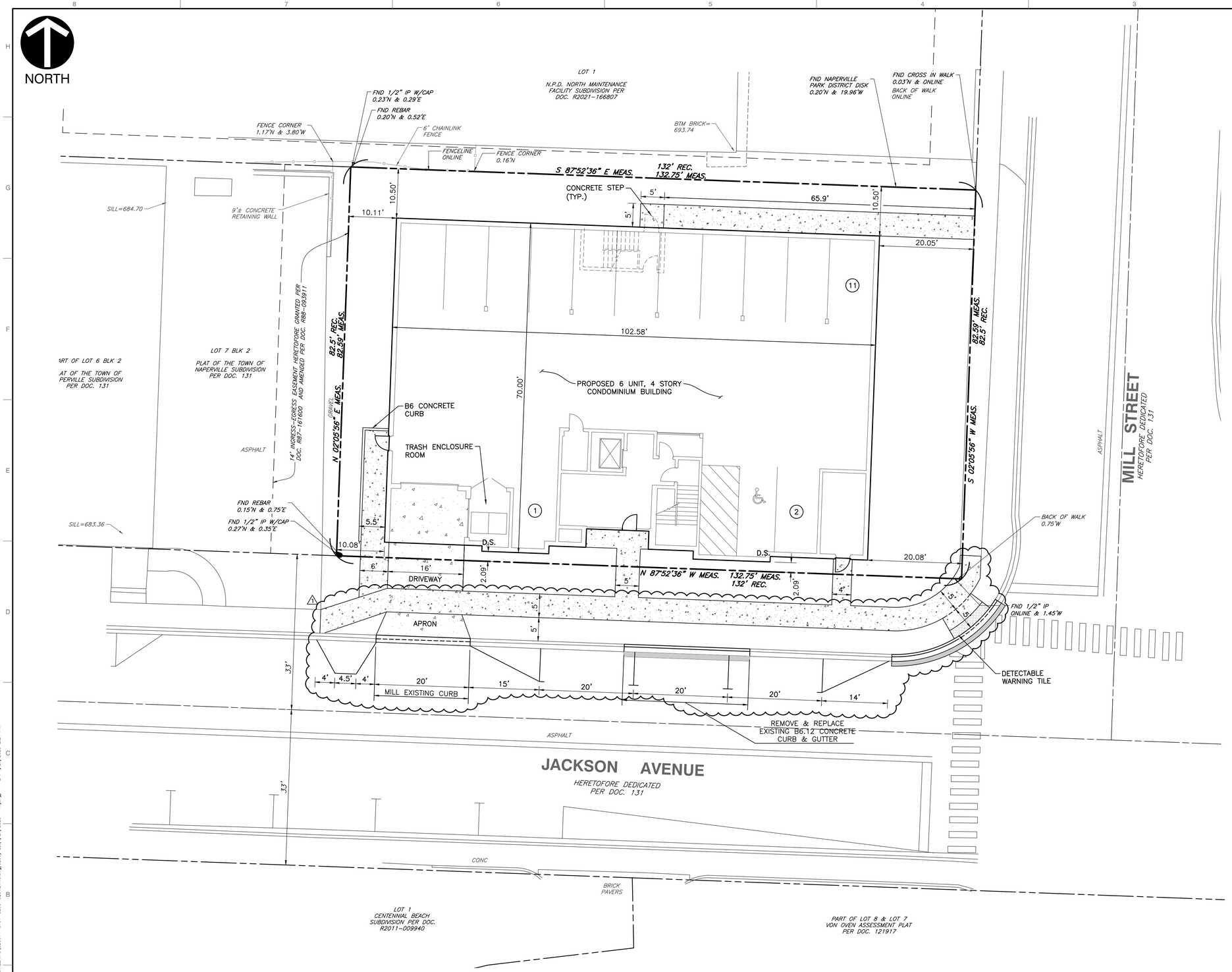

415 JACKSON ST FAR CALCULATIONS

December 7, 2022

Site Area (82.69 x 132.75)	**10,934**	**SF**
GROUND FLOOR		
Lobby/Elevator/Stairwells	651	SF
Electrical/Sprinkler Rm	209	SF
Trash Area	117	SF
Total SF	**977**	**SF**
2ND FLOOR (Less Balconies)	6,680	SF
3RD FLOOR (Less Balconies)	6,680	SF
4TH FLOOR (Less Balconies)	6,680	SF
Total Occupied Area	**20,040**	**SF**
Ground Floor & Occupied Floors	**21,017**	**SF**
Alternate Basement Area	**3,000**	**SF**
FAR W/O BASEMENT	**1.91**	
FAR WITH BASEMENT	**2.19**	

DIMENSION NOTES

1. UNLESS OTHERWISE NOTED, ALL DIMENSIONS ARE TO THE BACK OF CURB. A MINIMUM OF 4 INCHES OF AGGREGATE BASE SHALL BE PLACED BENEATH ALL CURB AND GUTTER AND SHALL EXTEND 18 INCHES BEYOND BACK OF CURB.
2. FOR COMPLETE BUILDING DIMENSIONS, SEE ARCHITECTURAL PLANS.
3. EXISTING JACKSON AVENUE PAVEMENT MARKINGS ADJACENT TO THE SITE SHALL BE SCRUBBED. PROPOSED PARKING SPACES AND EDGE LINES SHALL BE 4" SOLID WHITE. CROSS WALK PAVEMENT MARKINGS SHALL BE RESTORED WITHIN THE CONSTRUCTION LIMITS.

CONCRETE PAVEMENT

(NTS)

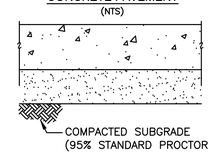

SIDEWALK

4" PORTLAND CEMENT CONCRETE, CLASS SI (PUBLIC)
4" PORTLAND CEMENT CONCRETE, CLASS SI (PRIVATE)
2" COMPACTED CA-6 AGGREGATE BASE COURSE, TYPE B

DRIVEWAY, SIDEWALK THROUGH DRIVEWAY APRON AND APRON

8" PORTLAND CEMENT CONCRETE, CLASS SI
4" COMPACTED CA-6 AGGREGATE BASE COURSE, TYPE B

REFERENCE

1. EXISTING CONDITIONS ARE BASED UPON FIELD OBSERVATIONS MADE ON OCTOBER 10, 2022 BY CIVIL & ENVIRONMENTAL CONSULTANTS, INC.
1. FIELD DATUM: ILLINOIS STATE PLANE NSRS 2011, EAST ZONE– US SURVEY FOOT CITY OF NAPERVILLE DATUM NAVD 88.
2. UNDERGROUND UTILITY INFORMATION SHOWN HEREON IS BASED UPON FIELD OBSERVATIONS, ATLAS MAPS PROVIDED BY THE CITY OF NAPERVILLE AND THOSE PUBLIC UTILITY COMPANIES OPERATING UNDER FRANCHISE OR CONTRACT WITH THE CITY OF NAPERVILLE.

SCALE IN FEET
0 10 20

REVISION RECORD

NO	DATE	DESCRIPTION
1	01-27-23	REVISED PER CITY REVIEW, DATED 01-19-23

Civil & Environmental Consultants, Inc.
1230 East Diehl Road, Suite 200 - Naperville, IL 60563
630-963-6026 · 877-963-6026
www.cecinc.com

MIKOLS CONSTRUCTION, INC.
RIVERWALK PLACE
415 W JACKSON AVENUE
NAPERVILLE, ILLINOIS 60540

SITE DIMENSION PLAN

DATE:	12/07/2022	DRAWN BY:	SRH
DWG SCALE:	1" = 10'	CHECKED BY:	JGC
PROJECT NO:	320-614.3AW00		
APPROVED BY:	JGC		

DRAWING NO.: C200

SHEET 7 OF 12

P:\320-0001\320-614\-CADD\Dwg\FINAL ENGINEERING\320614-C101-C200-GEOMETRIC.dwg[C200] LS(1/27/2023 - mjung) - LP: 1/27/2023 2:21 PM

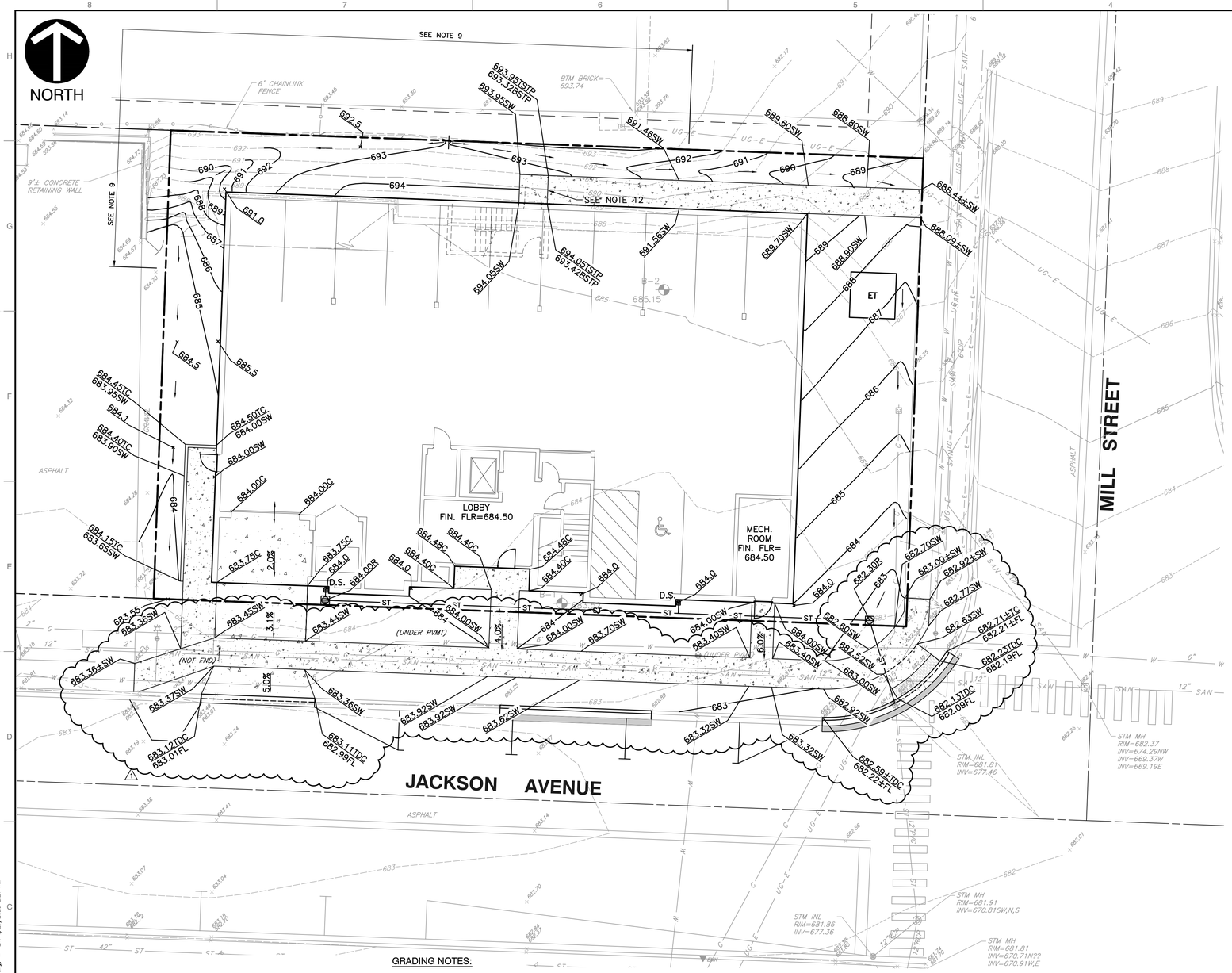

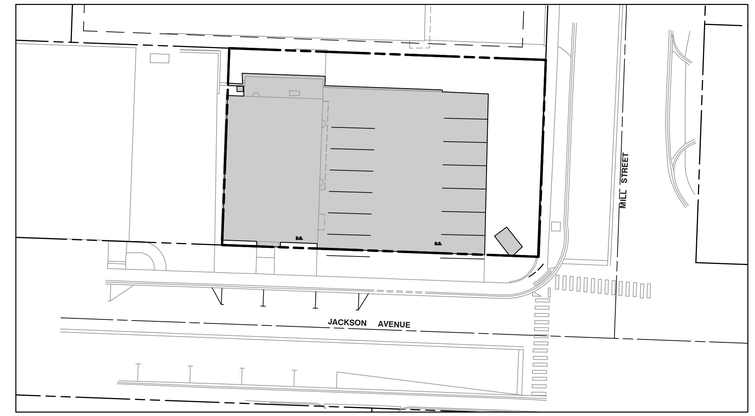

EXISTING PERVIOUS/IMPERVIOUS CONDITIONS
1"=30'

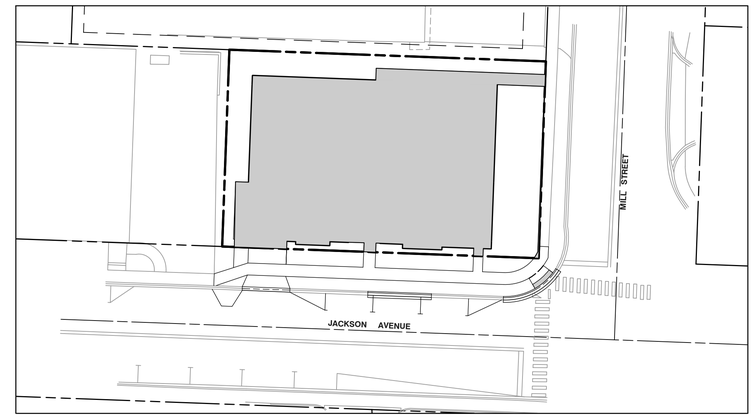

PROPOSED PERVIOUS/IMPERVIOUS CONDITIONS
1"=30'

PERVIOUS/IMPERVIOUS CALCULATIONS:

	IMPERVIOUS AREA	PERVIOUS AREA	PROJECT AREA
EXISTING	7,633 S.F.	3,301 S.F.	10,934 S.F.
PROPOSED	7,692 S.F.	3,242 S.F.	10,934 S.F.
NET DIFFERENCE	59 S.F	59 S.F.	0 S.F.

THE NET IMPERVIOUS AREA DIFFERENCE IS LESS THAN 2,500 S.F., THEREFORE NO BEST MANAGEMENT PRACTICES ARE REQUIRED.

GRADING NOTES:

1. UNLESS OTHERWISE INDICATED, ALL VEGETATIVE AND STRUCTURAL EROSION AND SEDIMENT CONTROL PRACTICES WILL BE CONSTRUCTED ACCORDING TO MINIMUM STANDARDS AND SPECIFICATION IN THE ILLINOIS URBAN MANUAL, LATEST EDITION.
2. ALL GRADES DEPICTED ARE FINISHED GRADES. IN NON–PAVED AREAS, THE CONTRACTOR SHALL SUBTRACT 6 INCHES (0.5 FEET) TO ALLOW FOR TOPSOIL/MULCH MATERIAL PLACEMENT.
3. THE CONTRACTOR SHALL PROVIDE INLET FILTER BASKETS IN ACCORDANCE WITH THE APPROVED EROSION CONTROL PLANS FOR ALL OPEN LID STRUCTURES TO MINIMIZE INTRUSION OF DEBRIS/SILT INTO THE STORM SEWER SYSTEM.
4. THE ESTIMATED CONSTRUCTION SCHEDULE IS AS FOLLOWS:

GRADING	SPRING	2023
PAVING	SUMMER	2023
GROUND STABILIZATION/SODDING	SUMMER	2023
LANDSCAPING	FALL	2023

LANDSCAPE MATERIALS SHALL BE INSTALLED AS SOON AS POSSIBLE TO STABILIZE SITE.

5. THE CONTRACTOR IS RESPONSIBLE FOR INSTALLATION OF ANY ADDITIONAL EROSION CONTROL MEASURES NECESSARY TO PREVENT EROSION AND SEDIMENTATION AS DETERMINED BY THE CITY OF NAPERVILLE.
6. DURING DEWATERING OPERATIONS, WATER WILL BE PUMPED INTO SEDIMENT BASINS OR SILT TRAPS. CONCRETE TRUCKS SHALL NOT BE PERMITTED TO WASH OUT OR DISCHARGE SURPLUS CONCRETE OR DRUM WASH WATER ON SITE. SPECIFIC AREAS FOR THIS ACTIVITY SHALL BE DESIGNATED BY THE CONTRACTOR AND PROVIDED WITH ADEQUATE SILTATION BASINS AND OTHER FACILITIES TO ASSURE THAT DISCHARGE IS CONTAINED AND CLEANSED BEFORE ENTERING THE RECEIVING STORM SEWER SYSTEM.
7. ALL ADJACENT STREETS SHOULD BE KEPT CLEAR OF MUD/DEBRIS. THE CONTRACTOR SHALL INSPECT THE STREETS DAILY AND CLEAN THEM AS NECESSARY.
8. STOCKPILES OF SOIL AND OTHER MATERIALS TO REMAIN IN PLACE MORE THAN THREE (3) DAYS SHALL BE FURNISHED WITH EROSION AND SEDIMENT CONTROL MEASURES (I.E. PERIMETER SILT FENCE). STOCK PILES, NOT BEING ACTIVELY WORKED AND TO REMAIN IN PLACE 14 DAYS OR MORE SHALL RECEIVE TEMPORARY SEEDING. STRAW MULCH WITH NETTING OR EROSION CONTROL BLANKET SHALL BE USED ON SIDE SLOPES.
9. INSTALL LOW/NO MAINTENANCE GROUND COVER WHERE SLOPES EXCEED 4 TO 1. SEE LANDSCAPE PLAN FOR DETAILS.
10. PROPOSED SIDEWALK SHALL HAVE CROSS SLOPE OF 1% MINIMUM AND 2% MAXIMUM.
11. DRAINAGE SWALES SHALL HAVE A MINIMUM SLOPE OF 1.5% (2% PREFERRED).
12. BASED ON THE ARCHITECTURAL PLANS, A FINISHED FLOOR ELEVATION OF 694.67 HAS BEEN ASSUMED. TWO (2) 7.5 INCH RISERS HAVE BEEN PROPOSED TO ACHIEVE THE DEPICTED GRADES.

REFERENCE

1. EXISTING CONDITIONS ARE BASED UPON FIELD OBSERVATIONS MADE ON OCTOBER 10, 2022 BY CIVIL & ENVIRONMENTAL CONSULTANTS, INC.
1. FIELD DATUM: ILLINOIS STATE PLANE NSRS 2011, EAST ZONE– US SURVEY FOOT CITY OF NAPERVILLE DATUM NAVD 88.
2. UNDERGROUND UTILITY INFORMATION SHOWN HEREON IS BASED UPON FIELD OBSERVATIONS, ATLAS MAPS PROVIDED BY THE CITY OF NAPERVILLE AND THOSE PUBLIC UTILITY COMPANIES OPERATING UNDER FRANCHISE OR CONTRACT WITH THE CITY OF NAPERVILLE.

SCALE IN FEET
0 10 20

REVISION RECORD

NO	DATE	DESCRIPTION
1	01-27-23	REVISED PER CITY REVIEW, DATED 01-13-23

Civil & Environmental Consultants, Inc.
1230 East Diehl Road, Suite 200 - Naperville, IL 60563
630-963-6026 · 877-963-6026
www.cecinc.com

MIKOLS CONSTRUCTION, INC.
RIVERWALK PLACE
415 W JACKSON AVENUE
NAPERVILLE, ILLINOIS 60540

SITE GRADING PLAN

DATE:	12/07/2022	DRAWN BY:	SRH
DWG SCALE:	1" = 10'	CHECKED BY:	JGC
PROJECT NO:		320-614.3AW00	
APPROVED BY:			JGC

DRAWING NO.: C300

SHEET 8 OF 12

P:\320-000\320-614\-CADD\Dwg\TRAIL ENGINEERING\320614-C101-C300-GRADING.dwg(C300) LS(1/27/2023 - mjung) - LP: 1/27/2023 2:21 PM

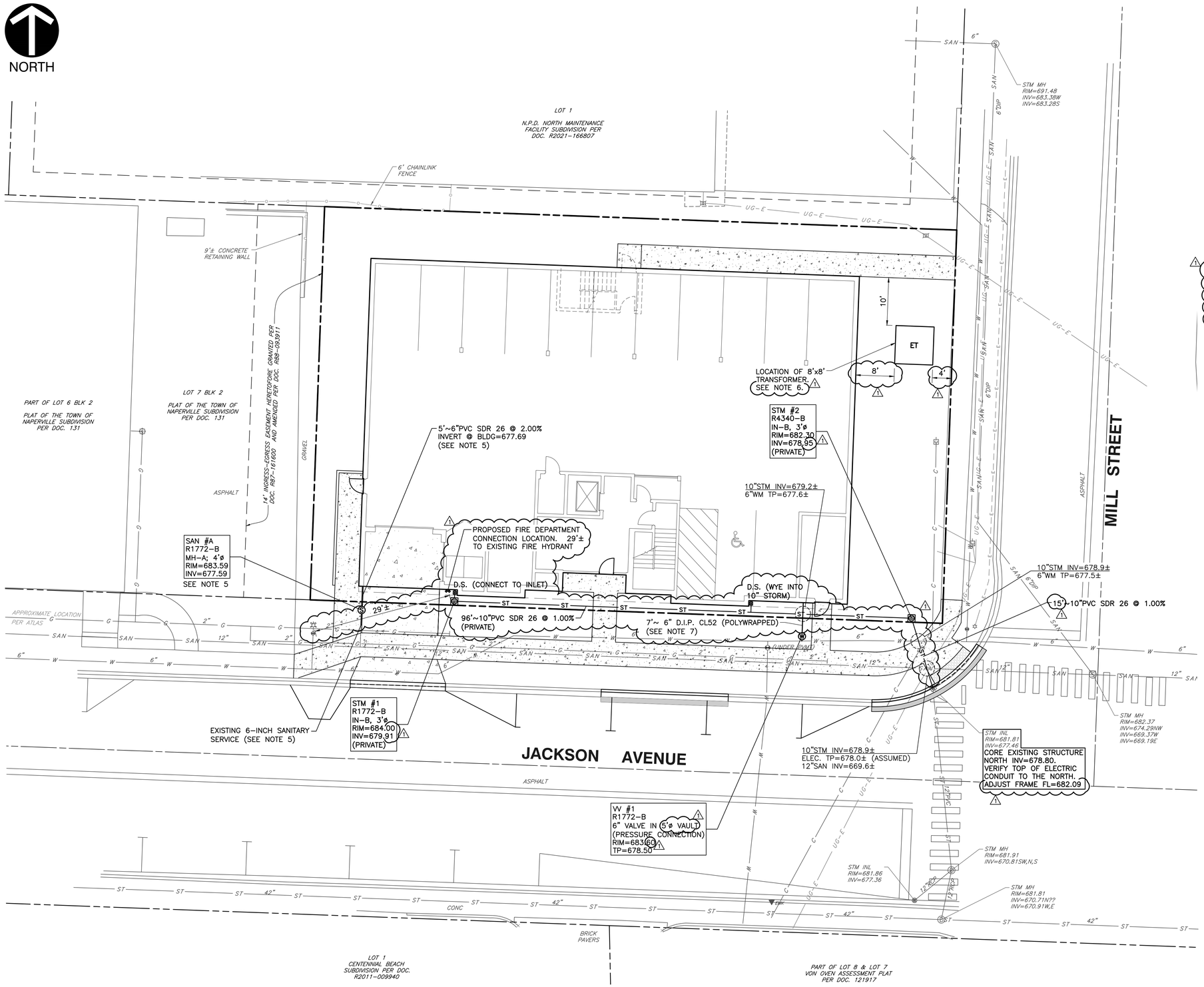

UTILITY NOTES

1. ALL PROPOSED UTILITY CROSSINGS WITH EXISTING UTILITIES SHALL BE VERIFIED IN THE FIELD BY THE CONTRACTOR PRIOR TO BEGINNING CONSTRUCTION.
2. THE SITE CONTRACTOR SHALL BE RESPONSIBLE FOR ALL UTILITY/SERVICE EXTENSIONS 5 FEET OUTSIDE THE BUILDING ENVELOPE. PIPE LENGTH CALL-OUTS HAVE BEEN DENOTED FROM THE FACE OF THE BUILDING.
3. THE CONTRACTOR SHALL PROVIDE FILTER BASKETS FOR ALL OPEN LID STRUCTURES WITHIN THE CONSTRUCTION ZONE TO MINIMIZE INTRUSION OF DEBRIS/SILT INTO THE STORM SEWER SYSTEM.
4. ALL CASTIINGS SHALL BE SHOP PAINTED WITH ASPHALTIC BASE PAINT.
5. THE SANITARY SERVICE SHALL BE 6" PVC SDR 26 ASTM D2241 WITH D3139 JOINTS @ 1.00% MINIMUM. PER INFORMATION PROVIDED BY DPU-W&WW, THE EXISTING SANITARY SERVICE HAS BEEN CIPP LINED. A DEPTH OF 6 FEET HAS BEEN ASSUMED AT THE EXISTING CLEANOUT SCHEDULED FOR REMOVAL. THE CONTRACTOR SHALL VERIFY THE DEPTH PRIOR TO ORDERING THE PROPOSED SANITARY MANHOLE. HE/SHE SHALL ALSO TELEVISE THE REMAINING SERVICE SOUTH OF THE MANHOLE AND RECEIVE APPROVAL FROM DPU-W&WW PRIOR TO REUSE. IF THE SERVICE IS NOT BEING REUSED, IT SHALL BE TERMINATED AT THE MAIN USING A STAINLESS STEEL REPAIR CLAMP, MODEL CR1 AS MANUFACTURED BY CASCADE WATERWORKS OR APPROVED EQUAL.
6. ALL DPU-E OWNED PRIMARY/SECONDARY CABLE AND EQUIPMENT (TRANSFORMERS, SWITCHES, ETC. . .) MUST BE INSTALLED INSIDE OF A PUBLIC UTILITY EASEMENT.
7. IT IS ANTICIPATED THAT THE 6" WATER SERVICE ENTERING THE BUILDING WILL SPLIT INTO A 4" FIRE SERVICE AND A 2" DOMESTIC SERVICE. VERIFY INTERNAL SIZING WITH THE APPROVED ARCHITECTURAL PLANS.

REFERENCE

1. EXISTING CONDITIONS ARE BASED UPON FIELD OBSERVATIONS MADE ON OCTOBER 10, 2022 BY CIVIL & ENVIRONMENTAL CONSULTANTS, INC.
1. FIELD DATUM: ILLINOIS STATE PLANE NSRS 2011, EAST ZONE- US SURVEY FOOT CITY OF NAPERVILLE DATUM NAVD 88.
2. UNDERGROUND UTILITY INFORMATION SHOWN HEREON IS BASED UPON FIELD OBSERVATIONS, ATLAS MAPS PROVIDED BY THE CITY OF NAPERVILLE AND THOSE PUBLIC UTILITY COMPANIES OPERATING UNDER FRANCHISE OR CONTRACT WITH THE CITY OF NAPERVILLE.

SCALE IN FEET
0 10 20

REVISION RECORD

NO	DATE	DESCRIPTION
1	01-27-23	REVISED PER CITY REVIEW, DATED 01-19-23

Civil & Environmental Consultants, Inc.
1230 East Diehl Road, Suite 200 - Naperville, IL 60563
630-963-6026 · 877-963-6026
www.cecinc.com

MIKOLS CONSTRUCTION, INC.
RIVERWALK PLACE
415 W JACKSON AVENUE
NAPERVILLE, ILLINOIS 60540

SITE UTILITY PLAN

DATE:	12/07/2022	DRAWN BY:	SRH
DWG SCALE:	1" = 10'	CHECKED BY:	JGC
PROJECT NO:		320-614.3AW00	
APPROVED BY:			JGC

DRAWING NO.:
C500
SHEET 9 OF 12

P:\320-000\320-614\-CADD\Dwg\TRAIL ENGINEERING\320614-CV01-C500-UTILITY.dwg[C500] LS(1/27/2023 - mjung) - LP: 1/27/2023 2:21 PM

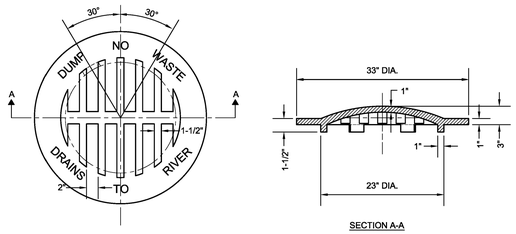

SECTION A-A

NOTES:

1. BEEHIVE GRATE SHALL BE NEENAH R4340B, EAST JORDAN 6527, OR EQUAL APPROVED BY THE CITY ENGINEER.
2. ALL CASTINGS SHALL BE SHOP PAINTED WITH AN ASPHALTIC BASE PAINT.
3. ALL CASTINGS SHALL INCLUDE "DUMP NO WASTE. DRAINS TO RIVER".

City of Naperville STANDARD DETAIL | BEEHIVE GRATE | STORM 14 | 290.14 | REVISED: 05/15/2015 | SHEET 1 OF 1

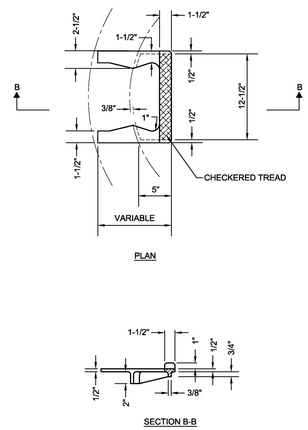

PLAN

SECTION B-B

City of Naperville STANDARD DETAIL | CAST IRON STEPS | STORM 6 | 290.06 | REVISED: 01/01/2013 | SHEET 1 OF 1

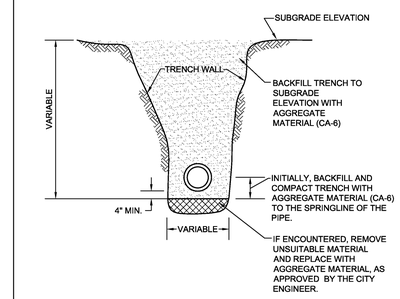

NOTES:

1. TRENCH BACKFILL MATERIAL SHALL BE COMPACTED IN ACCORDANCE WITH SECTION 550.07 OF THE IDOT STANDARD SPECIFICATIONS FOR ROAD AND BRIDGE CONSTRUCTION.
2. THIS DETAIL SHALL BE USED WHEREVER THE TRENCH IS MADE IN THE PROPOSED ROADWAY SUBGRADE, AND WHEREVER THE INNER EDGE OF THE TRENCH IS CLOSER THAN 2' TO THE EDGE OF THE PROPOSED PAVEMENT, CURB AND GUTTER, AND SIDEWALK.

City of Naperville STANDARD DETAIL | STORM SEWER TRENCH SECTION IN PAVED AREAS | STORM 20 | 290.20 | REVISED: 01/01/2013 | SHEET 1 OF 1

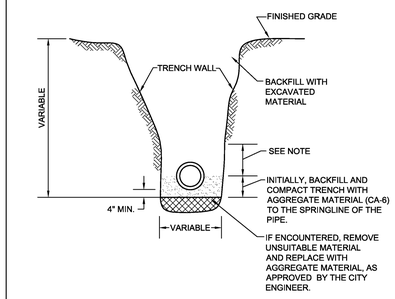

NOTE:

FOR PVC AND HDPE PIPE, BACKFILL WITH AGGREGATE MATERIAL (CA-6) TO 6" ABOVE THE TOP OF PIPE.

City of Naperville STANDARD DETAIL | STORM SEWER TRENCH SECTION IN NON-PAVED AREAS | STORM 21 | 290.21 | REVISED: 01/01/2013 | SHEET 1 OF 1

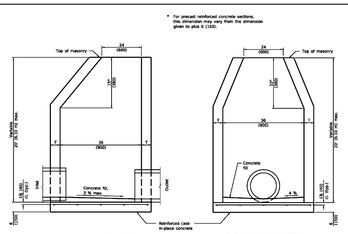

ELEVATION - ECCENTRIC

ELEVATION - CONCENTRIC

ALTERNATE MATERIALS FOR WALLS	T (min.)
Concrete Masonry Unit	8 (125)
Brick Masonry	8 (200)
Precast Reinforced Concrete Section	6 (75)
Cast-in-Place Concrete	6 (150)

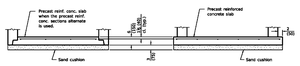

ALTERNATE BOTTOM SLAB

GENERAL NOTES

Bottom slabs shall have a minimum of 0.20 sq. in/ft. (129 sq. mm/m) in both directions with a maximum spacing of 12 (300).

Bottom slabs may be connected to the riser as determined by the fabricator; however, only a single row of reinforcement around the perimeter may be utilized.

See Standard 602601 for optional Precast Reinforced Concrete Flat Slab Top.

All dimensions are in inches (millimeters) unless otherwise shown.

Illinois Department of Transportation

DATE	REVISIONS
1-1-11	Detailed rein. in slabs. Added max. fmdt to height. Revised general notes.
1-1-09	Switched units to English (metric).

INLET - TYPE B

STANDARD 602306-03

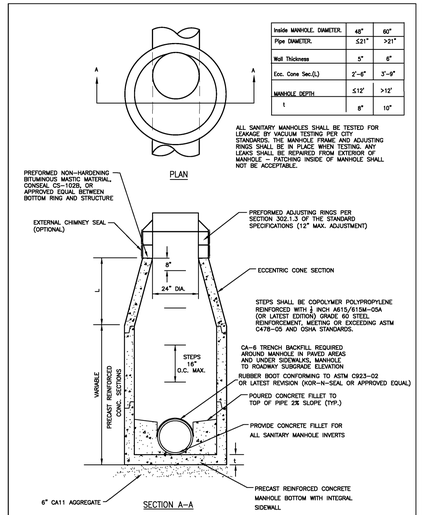

Inside MANHOLE, DIAMETER.	48"	60"
Pipe DIAMETER.	≤21"	>21"
Wall Thickness	5"	6"
Ecc. Cone Sec.(L_1)	2'-6"	3'-9"
MANHOLE DEPTH	≤12'	>12'
t	8"	10"

ALL SANITARY MANHOLES SHALL BE TESTED FOR LEAKAGE BY VACUUM TESTING OR EXFILTRATION TESTING. MANHOLE RINGS AND ADJUSTING RINGS SHALL BE IN PLACE WHEN TESTING. ANY LEAKS SHALL BE REPAIRED FROM EXTERIOR OF MANHOLE – PATCHING INSIDE OF MANHOLE SHALL NOT BE ACCEPTABLE.

City of Naperville STANDARD DETAIL | SANITARY SEWER MANHOLE | SANITARY 1 | 390.01 | REVISED: 06/01/2018 | SHEET 1 OF 1

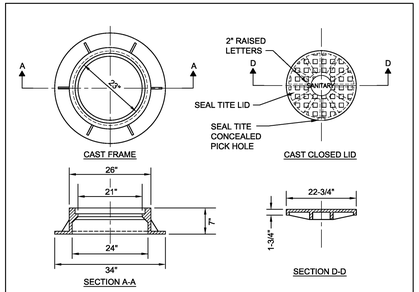

NOTES:

1) DUCTILE IRON SHALL BE GRADE 65-45-12 AND SHALL BE TESTED IN ACCORDANCE WITH FEDERAL SPECIFICATIONS.

2) ALL FRAMES AND COVERS SHALL HAVE MACHINED HORIZONTAL AND VERTICAL BEARING SURFACES. PICK HOLES SHALL NOT CREATE OPENINGS IN THE COVER.

3) THE MANHOLE COVERS SHALL HAVE 2" RAISED LETTERS AS SHOWN.

4) ALTERNATIVE TO DUCTILE IRON LID, GREY IRON CL 35 LID MAY BE USED.

5) CASTINGS ARE SHALL BE EAST JORDAN 1022-Z3; NEENAH R-1772 OR APPROVED EQUAL.

6) WATERPROOF, BOLTDOWN FRAME AND COVER SHALL BE USED IN FLOOD PLAIN AREA, AND AS NOTED ON THE PLANS. NEENAH R-1916-F1, EAST JORDAN IRON WORKS 1022-Z1PT OR APPROVED EQUAL.

7. LIDS AND FRAMES TO MEET ASSHTO M306 PROOF LOADING SPECIFICATIONS

City of Naperville STANDARD DETAIL | SANITARY MANHOLE - FRAME & COVER | SANITARY 6 | 390.06 | REVISED: 01/01/2013 | SHEET 1 OF 1

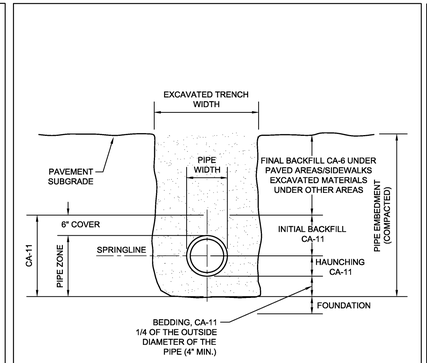

NOTES:

1. IN PAVED AREAS, ALL TRENCHES MUST BE COMPACTED IN CONFORMANCE WITH SECTION 550.07 OF THE IDOT STANDARD SPECIFICATIONS FOR ROAD & BRIDGE CONSTRUCTION.
2. IF FOUNDATION IS UNSUITABLE TO BED PIPE, UNDERCUTS MAY BE REQUIRED AS DIRECTED BY THE ENGINEER.

City of Naperville STANDARD DETAIL | TRENCH SECTION FOR PVC PIPE | SANITARY 10 | 390.10 | REVISED: 01/01/2013 | SHEET 1 OF 1

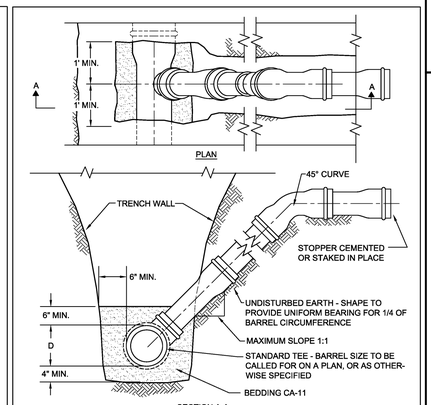

1. THE OPEN ENDS SHALL BE PROTECTED FROM DEBRIS AND GROUNDWATER ENTERING THE LATERAL WITH AN APPROVED PLUG.
2. MAXIMUM SLOPE SHALL BE LESS THAN 1:1 WHEN IT IS NECESSARY TO SECURE BEDDING IN UNDISTURBED EARTH.
3. WHEN A SERVICE CONNECTION IS TAPPED INTO PVC MAIN, THEN A SEWER SADDLE SHALL BE USED. GENECO TYPE "SEALTITE" OR APPROVED EQUAL. BANDS, NUTS AND BOLTS MUST BE 304 STAINLESS STEEL.
4. SDR 26 PVC PIPE MEETING REQUIREMENTS OF ASTM D-2241-05 AND JOINTS CONFORMING TO ASTM D-3139-98(2005) OR LATEST EDITIONS.

City of Naperville STANDARD DETAIL | RISE FOR SERVICE LATERAL | SANITARY 20 | 390.20 | REVISED: 01/01/2013 | SHEET 1 OF 1

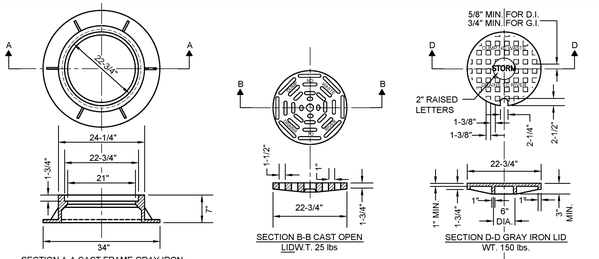

SECTION A-A CAST FRAME GRAY IRON
WT. 250 lbs.

SECTION B-B CAST OPEN LID
W.T. 25 lbs

SECTION D-D GRAY IRON LID
WT. 150 lbs.

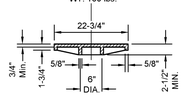

SECTION D-D OF DUCTILE IRON LID
WT. 125 lbs.

NOTES:

1. FRAME AND GRATE (LID) SHALL BE NEENAH R-2502 FOR OPEN GRATES, R-1772 FOR CLOSED LIDS; EAST JORDAN 1022-2 WITH M-1 GRATE OR TYPE A SOLID COVER, OR EQUAL APPROVED BY THE CITY ENGINEER.
2. ALL LIDS AND COVERS SHALL HAVE MACHINED SURFACES AND SEATS.
3. ALL CASTINGS SHALL BE SHOP PAINTED WITH AN ASPHALTIC BASE PAINT.
4. ALL CASTINGS SHALL INCLUDE "DUMP NO WASTE. DRAINS TO RIVER".

City of Naperville STANDARD DETAIL | FRAME & LID OR GRATE | STORM 10 | 290.10 | REVISED: 05/15/2015 | SHEET 1 OF 1

REVISION RECORD

NO	DATE	DESCRIPTION
1	01-27-23	NO REVISIONS THIS SHEET

Civil & Environmental Consultants, Inc.
1230 East Diehl Road, Suite 200 - Naperville, IL 60563
630-963-6026 · 877-963-6026
www.cecinc.com

MIKOLS CONSTRUCTION, INC.
RIVERWALK PLACE
415 W JACKSON AVENUE
NAPERVILLE, ILLINOIS 60540

DETAILS - 1

DATE:	12/07/2022	DRAWN BY:	SRH
DWG SCALE:	NONE	CHECKED BY:	JGC
PROJECT NO:			320-614.3AW00
APPROVED BY:			JGC

DRAWING NO.: C800

SHEET 10 OF 12

P:\320-000\320-614\-CADD\Dwg\FINAL ENGINEERING\320614-CV01-C800-C802-DETAILS.dwg[C800] LSV[12/7/2023 - ny/ung] - LM: 1/27/2023 2:21 PM

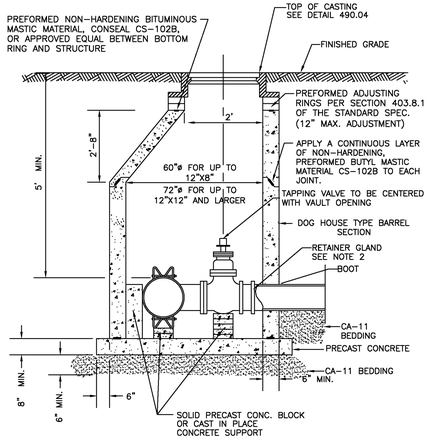

1. USE MEGALUG SERIES 1100 OR FORD UNI-FLANGE SERIES 1400 RETAINER GLANDS WITH STAINLESS STEEL T-BOLTS COATED WITH ANTI-SIEZE COMPOUND.
2. TAPPING SLEEVES SHALL BE HEAVY DUTY STAINLESS STEEL WITH STAINLESS STEEL BOLTS AND NUTS (ROMAC INDUSTRIES SST III, CASCADE CST-EX, FORD FTSS).
3. EXISTING PIPE TO BE DISINFECTED PRIOR TO INSTALLATION OF TAPPING SLEEVE AND TAPPING SLEEVE IS TO BE PRESSURE TESTED TO OPERATING PRESSURE PLUS 50 PERCENT PRIOR TO MAKING PRESSURE CONNECTION.
4. DO NOT USE STAINLESS STEEL SLEEVE ON SIZE ON SIZE TAPS OR PIPES LARGER THAN 12" DIAMETER.
5. IN THE EVENT IT IS NECESSARY TO USE A PRECAST SPLIT BOTTOM FLOOR DUE TO SPACE CONSTRAINTS THE FLOOR MUST BE GROUTED WATER TIGHT.
6. TAPPING VALVES SHALL CONFORM TO C515-09: AMERICAN SERIES 2500 RESILIENT WEDGE TAPPING VALVES WITH FLANGED X MECHANICAL JOINT ENDS OR APPROVED EQUAL.

City of Naperville STANDARD DETAIL	VALVE VAULT WITH STAINLESS STEEL SLEEVE PRESSURE TAP	WATER 3
	REVISED: 01/01/2013 · SHEET 1 OF 1	490.03

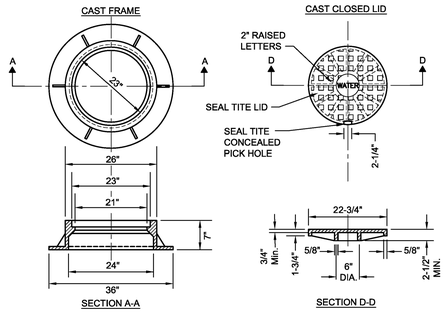

NOTES:

1. DUCTILE IRON SHALL BE GRADE 65-45-12 AND SHALL BE TESTED IN ACCORDANCE WITH FEDERAL SPECIFICATIONS.
2. ALL FRAMES AND COVERS SHALL HAVE MACHINED HORIZONTAL AND VERTICAL BEARING SURFACES. PICK HOLES SHALL NOT CREATE OPENINGS IN THE COVER.
3. THE MANHOLE COVERS SHALL HAVE RAISED LETTERS AS SHOWN.
4. ALTERNATIVE TO DUCTILE IRON LID, GREY IRON CL 35 LID MAY BE USED.
5. DIMENSIONS FOR CASTINGS ARE COMPARABLE TO EAST JORDAN 1022 OR NEENAH R-1772-C, HEAVY DUTY.
6. LIDS AND FRAMES TO MEET AASHTO M306 PROOF LOADING SPECIFICATIONS.

City of Naperville STANDARD DETAIL	VALVE VAULT - FRAME & COVER	WATER 4
	REVISED: 01/01/2013 · SHEET 1 OF 1	490.04

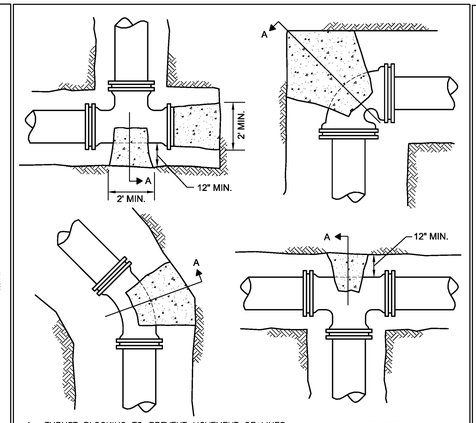

1. THRUST BLOCKING TO PREVENT MOVEMENT OF LINES UNDER PRESSURE AT BENDS, TEES, CAPS, VALVES, HYDRANTS, & AT POINTS SPECIFIED BY THE ENGINEER SHALL BE CLASS "SI".
2. CONCRETE A MINIMUM OF 12" THICK, PLACED BETWEEN SOLID GROUND & THE FITTING, AND SHALL BE ANCHORED IN SUCH A MANNER THAT THE PIPE AND FITTING WILL BE ACCESSIBLE FOR REPAIRS.
3. THRUST BLOCKS SHALL BE PLACED AT BENDS OF 11-1/4° OR MORE.
4. PIPE BENDS TO BE POLYETHYLENE ENCASED.
5. JOINT RESTRAINT AT BEND AND LENGTH OF PIPE EACH DIRECTION FROM BENDS AS REQUIRED BY THE CITY OF NAPERVILLE IF UNDISTURBED SOIL NOT AVAILABLE.
6. THRUST BLOCK FOR PIPES LARGER THAN 12"ø MUST BE POURED IN PLACE

City of Naperville STANDARD DETAIL	THRUST BLOCK	WATER 11
	REVISED: 05/15/2015 · SHEET 1 OF 1	490.11

CUT A SECTION OF POLYETHYLENE TUBE APPROXIMATELY TWO FEET LONGER THAN THE PIPE SECTION. REMOVE ALL LUMPS OF CLAY, MUD, CINDERS, OR OTHER MATERIAL THAT MIGHT HAVE ACCUMULATED ON THE PIPE SURFACE DURING STORAGE. SLIP THE POLYETHYLENE TUBE AROUND THE PIPE, STARTING AT THE SPIGOT END. BUNCH THE TUBE ACCORDION-FASHION ON THE END OF THE PIPE. PULL BACK THE OVERHANGING END OF THE TUBE UNTIL IT CLEARS THE PIPE END.

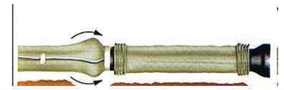

MAKE THE OVERLAP OF THE POLYETHYLENE TUBE BY PULLING BACK THE BUNCHED POLYETHYLENE FROM THE PRECEDING LENGTH OF PIPE AND SECURING IT IN PLACE. NOTE: THE POLYETHYLENE MAY BE SECURED IN PLACE BY USING TAPE, STRING, PLASTIC TIE STRAPS, OR ANY OTHER MATERIAL CAPABLE OF HOLDING THE POLYETHYLENE ENCASEMENT SNUGLY AGAINST THE PIPE.

TAKE UP SLACK IN THE TUBE ALONG THE BARREL OF THE PIPE TO MAKE A SNUG, BUT NOT TIGHT, FIT. FOLD EXCESS POLYETHYLENE BACK OVER THE TOP OF THE PIPE.

REPAIR ALL SMALL RIPS, TEARS OR OTHER TUBE DAMAGE WITH MANUFACTURER APPROVED ADHESIVE TAPE.

1. COVER BENDS, REDUCERS AND OTHER PIPE-SHAPED APPURTENANCES WITH POLYETHYLENE IN THE SAME MANNER AS THE PIPE.
2. WRAP VALVES, TEES AND OTHER ODD-SHAPED APPURTENANCES WITH A FLAT SHEET OR SPLIT LENGTH OF POLYETHYLENE TUBE BY PASSING THE SHEET UNDER THE APPURTENANCES AND BRINGING IT UP AROUND THE BODY. MAKE SEAMS BY BRINGING THE EDGES OF THE POLYETHYLENE SHEET TOGETHER, FOLDING OVER TWICE, AND TAPING DOWN.
3. POLYETHYLENE ENCASEMENT TO BE IN ACCORDANCE WITH A.W.W.A. C105-990R LATEST VERSION.
4. COPPER SERVICE TAPS ARE TO BE WRAPPED WITH POLYETHELENE OR A SUITABLE DIELECTRIC APE FOR A MINIMUM CLEAR DISTANCE OF 3' AWAY FROM THE MAIN.

City of Naperville STANDARD DETAIL	POLYETHYLENE ENCASEMENT	WATER 15
	REVISED: 01/01/2013 · SHEET 1 OF 1	490.15

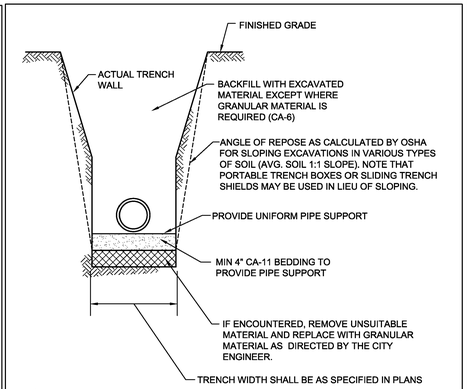

NOTES:

1. IN PAVED AREAS ALL TRENCHES SHALL BE COMPACTED IN ACCORDANCE WITH SECTION 550.07 OF THE IDOT STANDARD SPECIFICATIONS FOR ROAD AND BRIDGE CONSTRUCTION. METHOD 1. 95% MINIMUM STANDARD PROCTOR.

2. DUCTILE IRON WATER MAIN TO BE CLASS 52. ALL DUCTILE IRON PIPE IS TO BE ENCASED IN POLYETHYLENE FILM. POLYETHYLENE ENCASEMENT TO BE INSTALLED IN ACCORDANCE WITH AWWAC105A21.5-99.(OR LATEST EDITION)

3. STAINLESS STEEL NUTS, BOLTS/T-BOLTS, AND WASHERS, TYPE 304 OR BETTER, WILL BE REQUIRED ON ALL WATER MAIN INSTALLATIONS. THIS WOULD APPLY TO HYDRANTS, TAPPING SLEEVES, VALVES, FITTINGS, RESTRAINT, AND OTHER APPURTENANCES BURIED OR IN VALVE VAULTS. MECHANICAL JOINTS AND RESTRAINT GLANDS REQUIRE 304 STAINLESS STEEL T-BOLTS. AN ANTI-SEIZE COMPOUND SHALL BE FACTORY APPLIED TO NUTS OR BOLTS - ANY DAMAGE TO THIS COATING SHALL BE REPAIRED WITH FIELD-APPLIED, APPROVED ANTI-SEIZE COMPOUND THAT IS A MOLYBDENUM-BASE LUBRICANT, BOSTIK NEVER-SEEZ OR APPROVED EQUAL.

City of Naperville STANDARD DETAIL	WATER MAIN TRENCH SECTION	WATER 10
	REVISED: 01/01/2013 · SHEET 1 OF 1	490.10

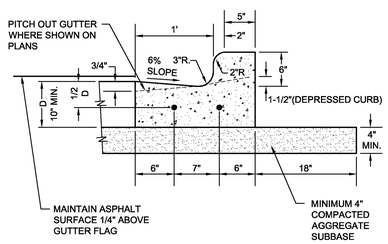

NOTES:

1. 3/4" PREFORMED BITUMINOUS EXPANSION JOINT WITH TWO (2) NUMBER 6 COATED SMOOTH DOWEL BARS (3/4" DIA. X 18") WITH GREASE CAPS SHALL BE PLACED EVERY 150', 10' EITHER SIDE OF DRAINAGE STRUCTURES, P.C.'S, RADIUS POINTS AND BACK OF CUL-DE-SACS. WHEN EXPANSION JOINTS ARE CONSTRUCTED ADJACENT TO EXISTING CURB & GUTTER THE EXISTING CURB SHALL BE DRILLED AND TWO (2) NUMBER 6 COATED SMOOTH DOWEL BARS (3/4" X 18") GROUTED IN PLACE. GREASE CAPS SHALL BE PLACED ON THE SIDE OF THE NEW CURB AND GUTTER SHALL HAVE A PINCHED STOP THAT WILL PROVIDE A MINIMUM 1" EXPANSION.
2. TOOLED CONTROL JOINTS OR SAWCUTS SHALL BE MADE EVERY 15'.
3. SAWCUTS SHALL BE MADE WITHIN TWENTY-FOUR (24) HOURS AND SEALED WITH A CITY APPROVED JOINT SEALANT. JOINTS SHALL BE CLEAN AND DRY PRIOR TO APPLICATION OF SEALANT.
4. FOR CURB AND GUTTER CONSTRUCTED OVER UTILITY TRENCHES, TWO (2) EPOXY COATED REINFORCING BARS (NO. 4) SHALL BE PLACED IN THE CURB AND GUTTER, CENTERED OVER THE TRENCH.

City of Naperville STANDARD DETAIL	B6.12 BARRIER CURB & GUTTER	PAVEMENT 20
	REVISED: 01/01/2013 · SHEET 1 OF 1	590.20

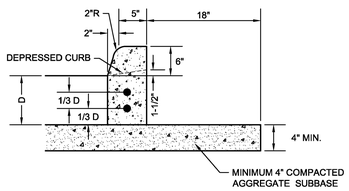

NOTES:

1. 3/4" PREFORMED BITUMINOUS EXPANSION JOINT WITH TWO (2) NUMBER 6 COATED SMOOTH DOWEL BARS (3/4" DIA. X 18") WITH GREASE CAPS SHALL BE PLACED EVERY 150', 10' EITHER SIDE OF DRAINAGE STRUCTURES, P.C.'S, RADIUS POINTS AND BACK OF CUL-DE-SACS. WHEN EXPANSION JOINTS ARE CONSTRUCTED ADJACENT TO EXISTING CURB & GUTTER THE EXISTING CURB SHALL BE DRILLED AND TWO (2) NUMBER 6 COATED SMOOTH DOWEL BARS (3/4" X 18") GROUTED IN PLACE. GREASE CAPS SHALL BE PLACED ON THE SIDE OF THE NEW CURB AND GUTTER SHALL HAVE A PINCHED STOP THAT WILL PROVIDE A MINIMUM 1" EXPANSION.
2. TOOLED CONTROL JOINTS OR SAWCUTS SHALL BE MADE EVERY 15'.
3. SAWCUTS SHALL BE MADE WITHIN TWENTY-FOUR (24) HOURS AND SEALED WITH A CITY APPROVED JOINT SEALANT. JOINTS SHALL BE CLEAN AND DRY PRIOR TO APPLICATION OF SEALANT.
4. FOR CURB AND GUTTER CONSTRUCTED OVER UTILITY TRENCHES, TWO (2) EPOXY COATED REINFORCING BARS (NO. 4) SHALL BE PLACED IN THE CURB AND GUTTER, CENTERED OVER THE TRENCH.

City of Naperville STANDARD DETAIL	TYPE B BARRIER CURB	PAVEMENT 23
	REVISED: 01/01/2013 · SHEET 1 OF 1	590.23

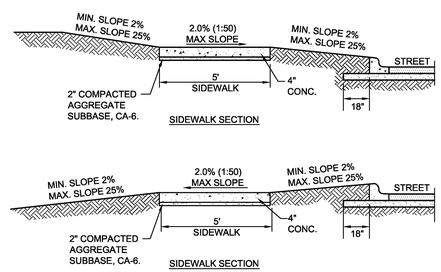

NOTES:

1. CONCRETE SHALL BE IDOT CLASS SI.
2. MINIMUM SIDEWALK THICKNESS SHALL BE 4".
3. SIDEWALK THICKNESS ACROSS DRIVEWAYS SHALL BE AT A MINIMUM 6" FOR RESIDENTIAL DRIVEWAYS AND 8" FOR COMMERCIAL DRIVEWAYS.
4. MAXIMUM LONGITUDINAL SLOPE SHALL NOT EXCEED 5% (20:1). FOR ANY SLOPE IN EXCESS OF 5%, ALL REQUIREMENTS OF THE ILLINOIS ACCESSIBILITY CODE (LATEST EDITION) SHALL BE MET.
5. MINIMUM TRANSVERSE SLOPE SHALL BE 1.0% (1:100). MAXIMUM TRANSVERSE SLOPE SHALL BE 2.0% (1:50).
6. A MINIMUM 2" AGGREGATE SUBBASE (CA-6) SHALL BE PROVIDED. (4" THROUGH COMMERCIAL DRIVEWAYS).
7. AGGREGATE SUBBASE SHALL BE MECHANICALLY COMPACTED.
8. ALL SIDEWALKS SHALL BE PROMPTLY BACKFILLED AND PROTECTED FROM DAMAGE.
9. SIDEWALK CONSTRUCTION SHALL FOLLOW APPLICABLE IDOT STANDARDS.
10. SIDEWALKS SHALL FOLLOW CURRENT ADA GUIDELINES.

City of Naperville STANDARD DETAIL	SIDEWALK	PAVEMENT 30
	REVISED: 01/01/2013 · SHEET 1 OF 1	590.30

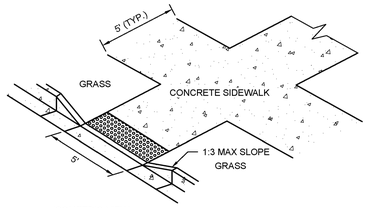

NOTES:

1. ALL AGGREGATE SUB-BASE SHALL BE MECHANICALLY COMPACTED.
2. SIDEWALK THICKNESS AT CURB RAMPS SHALL BE A MINIMUM OF 6" PCC ON 2" AGGREGATE SUB BASE.
3. SIDEWALK CONSTRUCTION SHALL FOLLOW APPLICABLE IDOT STANDARDS.
4. SIDEWALKS SHALL FOLLOW CURRENT ADA GUIDELINES.

APPLICABLE IDOT STANDARD DETAILS (USE LATEST REVISION):

424001-XX	PERPENDICULAR CURB RAMPS FOR SIDEWALKS
424006-XX	DIAGONAL CURB RAMPS FOR SIDEWALKS
424011-XX	CORNER PARALLEL CURB RAMPS FOR SIDEWALKS
424016-XX	MID-BLOCK CURB RAMPS FOR SIDEWALKS
424021-XX	DEPRESSED CORNER FOR SIDEWALKS
424026-XX	ENTRANCE/ALLEY PEDESTRIAN CROSSINGS
424031-XX	MEDIAN PEDESTRIAN CROSSINGS
606001-XX	CONCRETE CURB TYPE B AND COMB CONCRETE CURB AND GUTTER

APPROVED ADA DETECTABLE WARNING TILES:

1. ADA SOLUTIONS - CAST IN PLACE REPLACEABLE
2. ARMOR TILE - CAST IN PLACE
3. DETECTILE - SLIMTEK II
4. TUFTILE - POLYMER WET-SET

City of Naperville STANDARD DETAIL	CURB RAMPS	PAVEMENT 32
	REVISED: 08/01/2018 · SHEET 1 OF 1	590.32

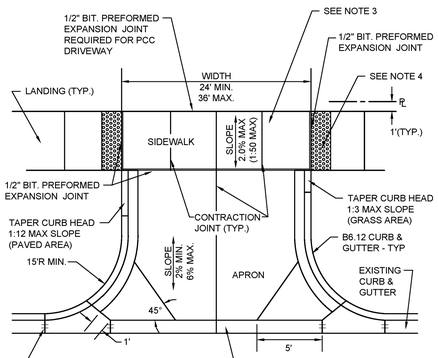

NOTES:

1. ALL AGGREGATE SUB BASE SHALL BE MECHANICALLY COMPACTED.
2. SIDEWALK SHALL CONTINUE THROUGH DRIVEWAYS.
3. SIDEWALK THICKNESS ACROSS DRIVEWAYS SHALL BE A MINIMUM OF 8" PCC ON 4" AGGREGATE SUB BASE.
4. EXPANSION JOINT MATERIAL MUST MATCH THE FULL DEPTH OF THE PAVEMENT.
5. DETECTABLE WARNINGS SHALL ONLY BE INSTALLED AT DRIVEWAYS WITH PERMANENT TRAFFIC CONTROL DEVICES.
6. SIDEWALK CONSTRUCTION SHALL FOLLOW APPLICABLE IDOT STANDARDS.
7. SIDEWALKS SHALL FOLLOW CURRENT ADA GUIDELINES.

City of Naperville STANDARD DETAIL	TYPICAL COMMERCIAL DRIVEWAY DETAIL	PAVEMENT 5
	REVISED: 08/01/2018 · SHEET 1 OF 1	590.05

REVISION RECORD

NO	DATE	DESCRIPTION
1	01-27-23	NO REVISIONS THIS SHEET

Civil & Environmental Consultants, Inc.
1230 East Diehl Road, Suite 200 - Naperville, IL 60563
630-963-6026 · 877-963-6026
www.cecinc.com

MIKOLS CONSTRUCTION, INC.
RIVERWALK PLACE
415 W JACKSON AVENUE
NAPERVILLE, ILLINOIS 60540

DETAILS - 2

DATE:	12/07/2022	DRAWN BY: SRH
DWG SCALE:	NONE	CHECKED BY: JGC
PROJECT NO:		320-614.3AW00
APPROVED BY:		JGC

DRAWING NO.: C801

SHEET 11 OF 12

P:\320-000\320-614\-CADD\Dwg\PAVE_ENGINEERING\320614-C801-C802-DETAILS.dwg\C801\ LSI\12/12/2023 - mjung\ - LP: 1/27/2023 2:21 PM

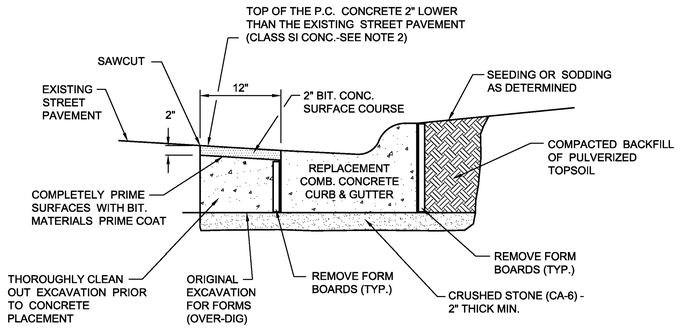

NOTES:

1. THE COMPLETE REPAIR OF PAVEMENTS ADJACENT TO THE REPLACEMENT CONCRETE CURB AND GUTTER IS INCLUDED IN THE COST OF THE NEW CURB AND GUTTER.
2. CLASS SI CONCRETE SHALL BE POURED SEPARATELY FROM THE CURB ONCE THE FORM BOARDS HAVE BEEN REMOVED.

City of Naperville
STANDARD DETAIL

CURB REPLACEMENT

REVISED: 05/15/2015 | SHEET 1 OF 1 | PAVEMENT 24 | **590.24**

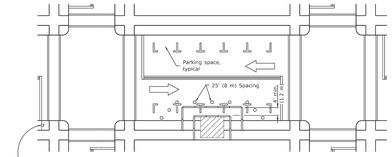

W20-I103(0)-48 for contract construction projects

Or

W20-3(0)-48 for maintenance and utility projects

SIDEWALK DIVERSION

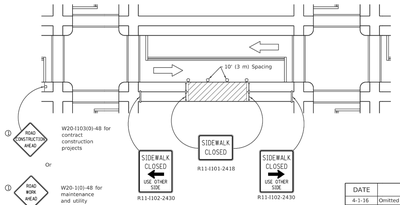

W20-I103(0)-48 for contract construction projects

Or

W20-3(0)-48 for maintenance and utility projects

SIDEWALK CLOSURE

③ Omit whenever duplicated by road work traffic control.

SYMBOLS

- Work area
- Sign on portable or permanent support
- Barricade or drum
- Cone, drum or barricade
- Type III barricade
- Detectable pedestrian channelizing barricade

GENERAL NOTES

This Standard is used where, at any time, pedestrian traffic must be rerouted due to work being performed.

This Standard must be used in conjunction with other Traffic Control & Protection Standards when roadway traffic is affected.

Temporary facilities shall be detectable and accessible.

The temporary pedestrian facilities shall be provided on the same side of the closed facilities whenever possible.

The SIDEWALK CLOSED / USE OTHER SIDE sign shall be placed at the nearest crosswalk or intersection to each end of the closure. Where the closure is at the end of a crosswalk, shall be erected on the corners across the street from the closure. The SIDEWALK CLOSED signs shall be used at the ends of the actual closures.

Type III barricades and R11-2-4830 signs shall be positioned as shown in "ROAD CLOSED TO ALL TRAFFIC" detail on Standard 701901.

All dimensions are in inches (millimeters) unless otherwise shown.

DATE	REVISIONS
4-1-16	Omitted orange safety fence from standard as this is covered in the std. spec.
1-1-17	Added SIDEWALK DIVERSION. Modified appearance of plan views. Renamed Std.

Illinois Department of Transportation
PASSED April 1, 2016
ENGINEER OF SAFETY ENGINEERING
APPROVED April 1, 2016
ENGINEER OF DESIGN AND ENVIRONMENT
D-91-039-00

SIDEWALK, CORNER OR CROSSWALK CLOSURE
(Sheet 1 of 2)
STANDARD 701801-06

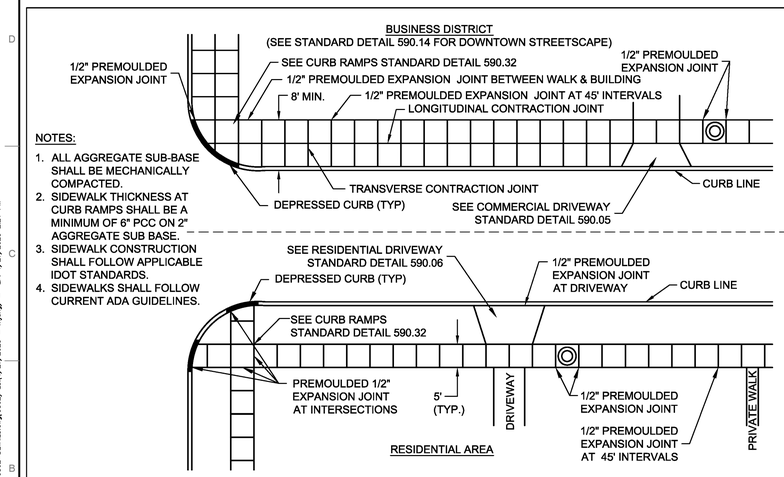

NOTES:

1. ALL AGGREGATE SUB-BASE SHALL BE MECHANICALLY COMPACTED.
2. SIDEWALK THICKNESS AT CURB RAMPS SHALL BE A MINIMUM OF 6" PCC ON 2" AGGREGATE SUB BASE.
3. SIDEWALK CONSTRUCTION SHALL FOLLOW APPLICABLE IDOT STANDARDS.
4. SIDEWALKS SHALL FOLLOW CURRENT ADA GUIDELINES.

City of Naperville
STANDARD DETAIL

SIDEWALK CONSTRUCTION

REVISED: 01/01/2013 | SHEET 1 OF 1 | PAVEMENT 31 | **590.31**

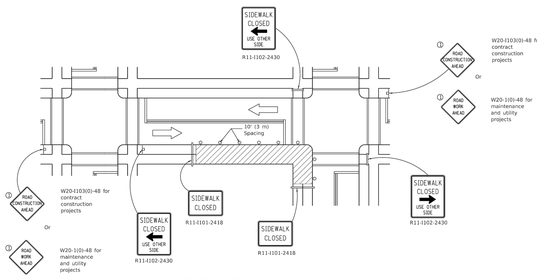

W20-I103(0)-48 for contract construction projects

Or

W20-3(0)-48 for maintenance and utility projects

W20-I103(0)-48 for contract construction projects

Or

W20-3(0)-48 for maintenance and utility projects

CORNER CLOSURE

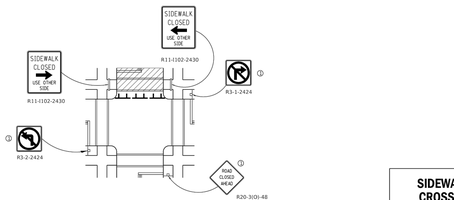

CROSSWALK CLOSURE

Illinois Department of Transportation
PASSED April 1, 2016
ENGINEER OF SAFETY ENGINEERING
APPROVED April 1, 2016
ENGINEER OF DESIGN AND ENVIRONMENT
D-91-039-00

SIDEWALK, CORNER OR CROSSWALK CLOSURE
(Sheet 2 of 2)
STANDARD 701801-06

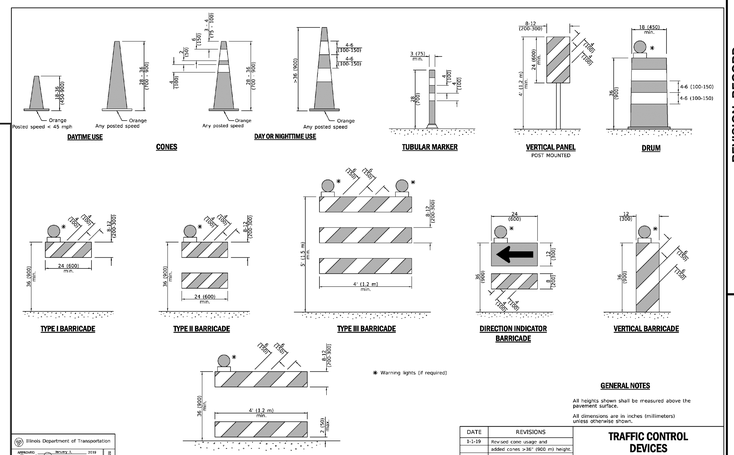

■ Warning lights (if required)

GENERAL NOTES

All heights shown shall be measured above the pavement surface.

All dimensions are in inches (millimeters) unless otherwise shown.

Illinois Department of Transportation
APPROVED January 5, 2018
ENGINEER OF SAFETY ENGINEERING
APPROVED January 5, 2018
ENGINEER OF DESIGN AND ENVIRONMENT
D-91-039-00

DATE	REVISIONS
3-1-19	Revised cone usage and added cones >36" (900 m) height.
1-1-18	Revised END WORK ZONE SPEED LIMIT sign from orange to white background.

TRAFFIC CONTROL DEVICES
(Sheet 1 of 3)
STANDARD 701901-08

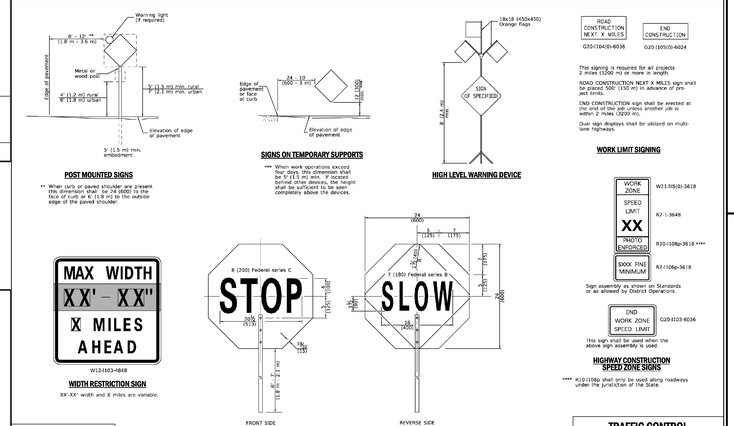

This signing is required for all projects 2 miles (3200 m) or more in length.

ROAD CONSTRUCTION NEXT X MILES sign shall be placed 500' (150 m) in advance of project limits.

END CONSTRUCTION sign shall be erected at the end of the job unless another job is within 2 miles (3200 m).

Dual sign displays shall be utilized on multi-lane highways.

WORK LIMIT SIGNING

Sign assembly as shown on Standards or as allowed by District Operations.

This sign shall be used when the above sign assembly is used.

HIGHWAY CONSTRUCTION SPEED ZONE SIGNS

**** R10-I108p shall only be used along roadways under the jurisdiction of the State.

Illinois Department of Transportation
APPROVED January 5, 2018
ENGINEER OF SAFETY ENGINEERING
APPROVED January 5, 2018
ENGINEER OF DESIGN AND ENVIRONMENT
D-91-039-00

TRAFFIC CONTROL DEVICES
(Sheet 2 of 3)
STANDARD 701901-08

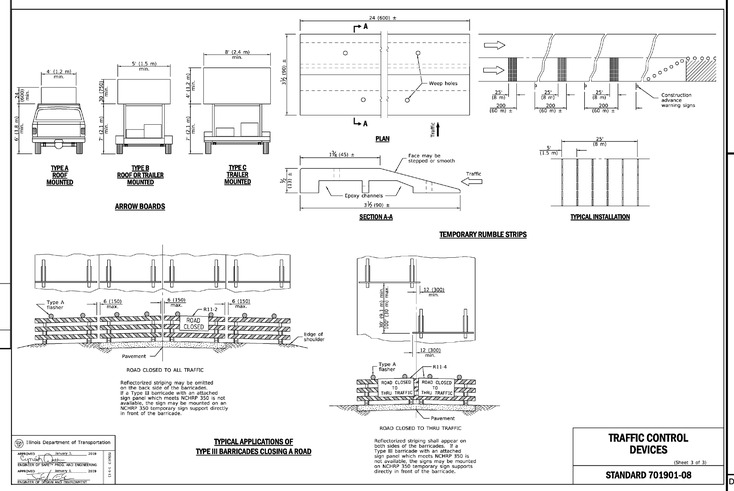

Illinois Department of Transportation
APPROVED January 5, 2018
ENGINEER OF SAFETY ENGINEERING
APPROVED January 5, 2018
ENGINEER OF DESIGN AND ENVIRONMENT
D-91-039-00

TRAFFIC CONTROL DEVICES
(Sheet 3 of 3)
STANDARD 701901-08

REVISION RECORD

NO	DATE	DESCRIPTION
1	01-07-23	NO REVISIONS THIS SHEET

Civil & Environmental Consultants, Inc.
1230 East Diehl Road, Suite 200 - Naperville, IL 60563
630-963-6026 · 877-963-6026
www.cecinc.com

MIKOLS CONSTRUCTION, INC.
RIVERWALK PLACE
415 W JACKSON AVENUE
NAPERVILLE, ILLINOIS 60540

DETAILS - 3

DATE:	12/07/2022
DRAWN BY:	SRH
DWG SCALE:	NONE
CHECKED BY:	JGC
PROJECT NO:	320-614.3AW00
APPROVED BY:	JGC

DRAWING NO.: C802

SHEET 12 OF 12

P:\320-000\320-614\-CADD\Dwg\FINAL ENGINEERING\320614-C101-C800-DETAILS.dwg(C802) LS:(1/27/2023 - mjung) - LP: 1/27/2023 2:21 PM