SECTION 1 – GENERAL REQUIREMENTS

1. THE ARCHITECT IS THE AUTHOR OF THESE DOCUMENTS AND RETAINS ALL COMMON LAW, STATUTORY, AND OTHER RESERVED RIGHTS INCLUDING THE COPYRIGHT. THESE DOCUMENTS ARE FOR THE USE SOLELY ON THIS PROJECT. USE ON ANY OTHER PROJECT IS PROHIBITED WITHOUT WRITTEN CONSENT BY THE ARCHITECT.
2. ALL WORK SHALL BE PREFORMED IN COMPLIANCE WITH ALL APPLICABLE LOCAL, STATE, AND NATIONAL CODES AND ORDINANCES AND ALL AUTHORITIES HAVING JURISDICTION.
3. WHILE THE ARCHITECT HAS TRIED THEIR BEST ON THE FOLLOWING NOTES TO CATEGORIZE THE INFORMATION UNDER A TITLE THAT PERTAINS TO A SPECIFIC TRADE OR SUPPLIER, THERE ARE MANY NOTES THAT APPLY TO SEVERAL DIFFERENT TRADES OR SUPPLIERS, SO IT IS IMPERATIVE THAT ALL NOTES BE REVIEWED BY ALL TO ASSURE THERE IS A CLEAR UNDERSTANDING TO THE ENTIRE PROJECT. FURTHERMORE, ALL SHEETS NOTED ON THE INDEX OF DRAWINGS, PLUS THE BUILDER'S SPECIFICATIONS, SHOULD BE REVIEWED AND USED BY TRADES AND SUPPLIERS TO BID AND CONSTRUCT FROM.
4. THIS SET OF CONSTRUCTION DOCUMENTS IS MEANT TO INDICATE THE GENERAL DESIGN INTENT, DIMENSIONS OF THE PROJECT, MAJOR DESIGN ELEMENTS, AND THE BASIC ORGANIZATION OF THE MECHANICAL, ELECTRICAL AND PLUMBING SYSTEMS. THESE DOCUMENTS DO NOT NECESSARILY DESCRIBE OR INDICATE ALL MATERIALS AND WORK REQUIRED FOR FULL PERFORMANCE OF THE BUILDING SYSTEMS AND THE FINAL COMPLETION OF THE PROJECT. THE CONTRACTOR AND SUB-CONTRACTORS ARE RESPONSIBLE FOR PROVIDING ALL ITEMS REQUIRED FOR PROPER EXECUTION AND COMPLETION OF THE PROJECT IN ACCORDANCE WITH ALL APPLICABLE BUILDING AND ZONING CODES.
5. THE CONTRACTOR IS TO NOTIFY ARCHITECT IN WRITING OF ANY CHANGES OR DISCREPANCIES IN THE DRAWINGS, SPECIFICATIONS, OR EXISTING FIELD CONDITIONS UPON DISCOVERY OF DISCREPANCY AND PRIOR TO BIDDING, IF KNOWN, AND COMMENCEMENT OF ANY WORK IN QUESTION WHEN POSSIBLE. THE CONTRACTOR SHALL ALSO NOTIFY THE ARCHITECT IN WRITING IN A TIMELY MANNER OF ANY WORK REQUIRING SPECIAL DETAILING, WHICH HAS NOT BEEN INCLUDED WITHIN THE ISSUED SET OF DOCUMENTS.
6. DO NOT SCALE THE DRAWINGS. FIGURE DIMENSIONS SHALL TAKE PRECEDENCE.
7. ALL WALL DIMENSIONS ARE TO DRYWALL, TO FACE OF MASONRY, OR FACE OF EXTERIOR SHEATHING, UNLESS NOTED OTHERWISE.
8. ALL ANGLED WALLS ASSUMED TO BE 45 DEGREES, UNLESS NOTED OTHERWISE.
9. FINISHED DIMENSIONS AT CRITICAL AREAS INCLUDING BUT NOT LIMITED TO ANY CABINETRY, APPLIANCES, COUNTERTOPS, PLUMBING FIXTURES, STAIRWAYS, WINDOWS, DOORS, AND TRIM WORK IS RECOMMENDED TO BE FIELD VERIFIED PRIOR TO ANY ORDERING.
10. THE ARCHITECT HAS NOT BEEN HIRED IN A SUPERVISORY CAPACITY FOR THE CONSTRUCTION OF THIS PROJECT. THEREFORE, THE ARCHITECT SHALL BE HELD HARMLESS FOR ANY AND ALL REASONS AS IT RELATES TO:
   10.1. CONSTRUCTION ACTIVITIES, MEANS, METHODS, TECHNIQUES, SEQUENCE PROCEDURES OR SAFETY PRECAUTIONS IN CONNECTION WITH THE CONSTRUCTION OF THIS PROJECT. THESE SHALL BE THE SOLE RESPONSIBILITY OF THE CONTRACTOR.
   10.2. RESPONSIBILITY OR LIABILITY FOR ANY PROBLEMS, DELAYS OR COSTS ARISING FROM NEGLIGENCE OR FAILURE TO CARRY OUT THE WORK IN ACCORDANCE WITH THE CONSTRUCTION DOCUMENTS BY THE CONTRACTOR, SUB-CONTRACTORS, SUPPLIERS OR ANY OTHER TRADES PERSON IN CONNECTION WITH THIS PROJECT.
   10.3. ANY PRODUCTS NOT PROPERLY FITTING AS IT IS THE SOLE RESPONSIBILITY OF THE CONTRACTOR, SUB-CONTRACTOR, SUPPLIERS OR ANY OTHER TRADESMAN TO VERIFY ACTUAL FIELD CONDITIONS PRIOR TO ANY ORDERING AND THE COORDINATION OF PRODUCTS AND MATERIALS AND THEIR ULTIMATE PROPER INSTALLATION.
11. THE ARCHITECT SHALL NOT HAVE THE AUTHORITY NOR THE RESPONSIBILITY TO STOP THE WORK.
12. CONTRACTOR TO COORDINATE BETWEEN MECHANICAL, ELECTRICAL, AND PLUMBING CONTRACTORS PRIOR TO START OF ANY ROUGH MECHANICAL, ELECTRICAL, AND PLUMBING WORK AND MAP OUT AND COORDINATE ALL WORK BETWEEN THE TRADES SUCH THAT ALL WORK CAN BE CONDUCTED WITHIN THE FRAMED WALLS AND FLOORS AND NO VERTICAL CHASES NEED TO BE CREATED AND NO SOFFITS NEED TO BE DROPPED BELOW THE CEILING. ANY CONFLICTS SHOULD BE BROUGHT TO THE ARCHITECTS ATTENTION AT THIS TIME AND PRIOR TO STARTING ANY ROUGH WORK. NO PLUMBING, MECHANICAL, OR ELECTRICAL INFORMATION IS TO BE SCALED FROM THE DRAWINGS.
13. ON-SITE VERIFICATION OF ALL DIMENSIONS AND CONDITIONS SHALL BE THE RESPONSIBILITY OF EACH CONTRACTOR.
14. IT IS THE RESPONSIBILITY OF THE CONTRACTOR AND SUBCONTRACTORS TO INITIATE, MAINTAIN, AND SUPERVISE ALL SAFETY MEASURES, PRECAUTIONS, AND PROCEDURES, CONNECTION WITH THE PROJECT.
15. ALL CONTRACTORS AND SUBCONTRACTORS SHALL BE LICENSED AND INSURED WITHIN THE JURISDICTION IN WHICH THE WORK IS TO BE DONE.
16. ALL COMPONENTS OF THE WORK SHALL BE PERFORMED IN ACCORDANCE WITH THE BEST PRACTICES OF THE PARTICULAR TRADE. BEFORE STARTING ANY WORK, EACH CONTRACTOR SHALL EXAMINE THE WORK PERFORMED BY OTHERS TO WHICH HIS WORK ADJOINS OR IS APPLIED AND WILL REPORT IN WRITING TO THE ARCHITECT ANY CONDITIONS THAT WILL PREVENT SATISFACTORY ACCOMPLISHMENT OF HIS CONTRACT. FAILURE TO NOTIFY THE ARCHITECT AND OWNER OF DEFICIENCIES OR FAULTS SHALL CONSTITUTE ACCEPTANCE THEREOF AND WAIVER OF ANY CLAIMS FOR IT UNSUITABILITY.
17. ALL MATERIALS SHALL BE USED AND INSTALLED IN STRICT ACCORDANCE WITH MANUFACTURER'S INSTRUCTIONS AND RECOMMENDATIONS. THIS INCLUDES VERIFYING ALL ROUGH OPENINGS, CLEARANCES, ATTACHMENT LOCATIONS, MECHANICAL/ELECTRICAL/PLUMBING REQUIREMENTS, FINISHING, ETC. PRIOR TO FRAMING AND AGAIN PRIOR TO INSTALL TO ASSURE PROPERLY FIT FOR THE PROPERTY.
18. THE CONTRACTOR SHALL DEFEND AND HOLD HARMLESS THE ARCHITECT AND THE ARCHITECT'S CONSULTANTS, THEIR RESPECTIVE SUB CONSULTANTS, OFFICERS, DIRECTORS, MEMBERS, EMPLOYEES AND AGENTS FROM AND AGAINST ANY AND ALL DAMAGES, LIABILITIES OR COSTS, INCLUDING REASONABLE ATTORNEY'S FEES AND DEFENSE COSTS, TO THE EXTENT ARISING OUT OF THE NEGLIGENT PERFORMANCE OF THE WORK BY THE CONTRACTOR, THE CONTRACTOR'S SUBCONTRACTOR, OR ANYONE FOR WHOM THE CONTRACTOR IS LEGALLY LIABLE. THE INDEMNIFICATION OBLIGATION UNDER THIS PARAGRAPH SHALL NOT BE LIMITED BY A LIMITATION ON THE AMOUNT OR TYPE OF DAMAGES, COMPENSATION OR BENEFITS PAYABLE BY OR FOR THE CONTRACTOR OR A SUBCONTRACTOR UNDER WORKERS' OR WORKMEN'S COMPENSATION ACTS, DISABILITY BENEFIT ACTS OR OTHER EMPLOYEE BENEFIT ACTS. THE CONTRACTOR SHALL NOT BE REQUIRED TO INDEMNIFY ANY PARTY FOR THAT PARTY'S OWN NEGLIGENCE.

SECTION 2 – EXCAVATION/SITE CLEARING

1. SITE EXCAVATION SHALL BE IN ACCORDANCE WITH CIVIL DRAWINGS THAT WERE REVIEWED AND APPROVED BY THE LOCAL AUTHORITY. CONTRACTOR TO REPORT ALL DEVIATIONS FROM DOCUMENTS TO THE ARCHITECT BEFORE BEGINNING ANY FURTHER WORK.

SECTION 3 – CONCRETE

1. ALL CONCRETE TO BE MIXED & PLACED IN ACCORDANCE WITH A.C.I. STANDARDS, BUILDING CODE REQUIREMENTS FOR REINFORCED CONCRETE AND ASTM C60.
2. SOIL BEARING CAPACITY ASSUMED TO BE 3,000 PSF.
   2.1. SOILS REPORT PROVIDED BY OWNER.
3. COMPRESSIVE STRENGTH OF CONCRETE:
   3.1. ALL CONCRETE SHALL ATTAIN A 28 DAY COMPRESSIVE STRENGTH OF 3000 PSI EXCEPT,
   3.2. EXTERIOR PORCHES, STEPS & WALKS EXPOSED TO THE WEATHER AND GARAGE FLOOR SLABS SHALL ATTAIN A MINIMUM OF 3500 PSI.
   3.3. ALL CONCRETE EXPOSED TO THE WEATHER, INCLUDING DURING CONSTRUCTION, SHALL HAVE A MINIMUM OF 5% AND A MAXIMUM OF 7% AIR ENTRAINED.
   3.4. PLEASE NOTE THAT IRC TABLE R402.2 ALLOWS SOME CONCRETE TO BE 2500 PSI, BUT THIS ARCHITECT PREFERS A MINIMUM REQUIREMENT FOR CONCRETE IS AS NOTED ABOVE.
4. ALL CONCRETE WORK SHALL BE POURED CONTINUOUSLY WHENEVER POSSIBLE.
5. PROVIDE CONCRETE CONTROL JOINTS (HEADING OUT FROM ALL INTERIOR STEEL COLUMNS & AS REQUIRED IN ALL LARGE POUR BASEMENT, GARAGE & DRIVEWAY SLABS, APPROX. 20 FT EACH WAY.
6. NO CONCRETE SHALL BE POURED WHEN THERE IS EXCESSIVE OR STANDING WATER OR WHEN THE TEMPERATURE OF THE SURROUNDING AIR IS LESS THAN 40 DEGREES F (WITHOUT CHEMICAL ADDITIVES). DO NOT USE ANY ADDITIVES WITHOUT THE WRITTEN CONSENT OF THE ARCHITECT. ALL FORMS, GROUND & OTHER MATERIALS WITH WHICH CONCRETE WILL COME INTO CONTACT SHALL BE FREE OF FROST BEFORE POURING. PROTECT THE CONCRETE & SOIL FROM FREEZING & HEAT SHALL BE PROVIDED IF NEEDED.
7. ALL CONCRETE SHALL CURE A MINIMUM OF SEVEN DAYS BEFORE ANY LOAD MAY BE PLACED ON IT OR BACKFILL CAN OCCUR.
8. DO NOT BACKFILL FOUNDATION WALLS UNTIL CONCRETE HAS CURED FOR AT LEAST 7 DAYS. PROVIDE BRACING AS REQUIRED TO FOUNDATION WALLS DURING BACKFILL.
9. AT ALL STOOPS, PORCHES PADS AND GARAGE AREAS, BACKFILL WITH COMPACTED FILL PER BUILDER'S SPECIFIED BACKFILL MATERIAL AND AS ALLOWED PER LOCAL AUTHORITY.
10. PROVIDE AND INSTALL PERIMETER DRAIN TILE.
   10.1. THE DRAIN TILE SHALL BE INSTALLED ON THE EXTERIOR OF ALL BASEMENT FOOTINGS AND AROUND THE OUTSIDE PERIMETER OF CRAWL SPACES. PROVIDE MANUFACTURER'S SPLICES, CORNERS AND TEES AS REQUIRED. THE DRAIN TILE SHALL BE 4"PERFORATED FLEXIBLE PVC PIPE IN SLEEVE, BEDDED ON 2"ANGLED GRAVEL, PLACED ON THE SIDE OF THE FOOTING, COVERED WITH 12"WASHED GRAVEL TO A POINT NOT LESS THAN 3"ABOVE THE TOP OF THE FOOTING.
   10.2. PROVIDE WINDOW WELL DRAINS, WHICH SHALL BE 4" PVC IN SLEEVE CONNECTED TO THE FOOTING DRAIN BY MEANS OF A PVC TEE. THE TOP END OF THE DRAIN PIPE SHALL BE LOCATED A MINIMUM OF 3"BELOW THE BOTTOM OF THE WINDOW FRAME AND SHALL BE PROVIDED WITH A PVC GRATE. THE WELL SHALL BE PROVIDED WITH A COARSE STONE TO A LEVEL ADEQUATE TO COVER THE GRATE.
11. REINFORCE THE FOUNDATION WALLS AS NOTED ON THE DRAWINGS. REBAR SHALL HAVE A MINIMUM OF 2" CONCRETE COVER. REINFORCE THE FOOTINGS WITH #5 REBARS EXTENDING 18"EACH WAY WHEREVER THE FOOTING SPANS OVER TRENCHES. ALL REBAR SHALL BE PER ASTM A615-GRADE 60 AND WELD WIRE REINFORCING SHALL BE PER ASTM A185.
12. ALL COPPER PIPING WITHIN ANY CONCRETE SHALL BE WRAPPED WITH A CODE APPROVED MATERIAL.
13. FINISH CONCRETE AS FOLLOWS: VERTICAL EXPOSED FOUNDATION WALLS BY REMOVING FINS AND FILL ALL HOLES. EXTERIOR WALKS AND STOOPS WITH BROOM FINISH; AND INTERIOR SLABS WITH TROWEL FINISH. PROVIDE CONTROL JOISTS AS REQUIRED.

SECTION 4 – MASONRY

1. ALL MASONRY CONSTRUCTION SHALL BE IN CONFORMANCE WITH THE "MASONRY TECHNICAL NOTES" BY THE "MASONRY ADVISORY COUNCIL", INCLUDING ITS HOT AND COLD WEATHER PROCEDURES.
2. THE OWNER SHALL SELECT BRICK, STONE, AND MORTAR PRIOR TO STARTING FROM CONTRACTOR SUPPLIED SAMPLES. THE CONTRACTOR TO PROVIDE A UNIT COST OF EACH AT TIME OF BID.
3. ALL MASONRY MATERIAL SHALL BE THOROUGHLY WET BEFORE LAID. MAINTAIN FRESHLY PLACED MASONRY AT MINIMUM TEMPERATURE OF 50 DEGREES F AFTER PLACING.
4. MASONRY VENEER SHALL BE JOINED TO FRAME CONSTRUCTION WITH US 0.22 GAUGE CORROSION RESISTANT 1" CORRUGATED METAL TIES FASTENED TO STUDS ALLOW THE WOOD TO OPEN NO MORE THAN WAY WOULD NOT ALLOW A 4" SPHERE TO PASS THRU, BUT AFTER THE CONTROL DEVICE IS RELEASED, IT WOULD ALLOW THE WINDOW TO FULLY OPEN.
5. ALL EXTERIOR DOORS TO BE FULLY WEATHER-STRIPPED AND INSULATED.
6. COMMON WALL DOOR BETWEEN GARAGE AND LIVING SPACE SHALL BE 20 MINUTE (MIN.) LABELED DOOR WITH SELF CLOSING HINGES AND SELF LATCHING, U.N.O.
7. ALL DOORS & DOOR HARDWARE PER BUILDER'S SPECIFICATIONS.
8. IF ANY DEAD BOLTS INSTALLED, THEY MUST BE THUMB TURN AT INSIDE, KEY AT OUTSIDE.
11. PROVIDE JAMB EXTENSIONS FOR DOORS & WINDOWS LOCATED IN ALL WALLS THICKER THAN 2x4. VERIFY WITH FLOOR PLAN WALL THICKNESS.

SECTION 10 – HVAC

1. ALL HEATING AND COOLING EQUIPMENT SHALL BE SIZED BY HVAC CONTRACTOR USING MANUAL S & MANUAL J. SEE SECTION 14 – IECC, #12 FOR MORE INFORMATION.
2. THE HEATING SYSTEM SHALL BE DESIGNED TO OPERATE AT 72 DEGREES F INSIDE AT 4'-0"ABOVE THE FLOOR WHEN IT IS -10 DEGREES OUTSIDE WITH A 15 MPH WIND. AND THE COOLING SYSTEM MUST PROVIDE 70 DEGREES F COOLING WHEN THE OUTSIDE TEMPERATURE IS 95 DEGREES F.
3. HVAC SYSTEM SHALL BE PER BUILDER'S SPECIFICATIONS.
4. PROVIDE COMBUSTION AIR FOR ALL FUEL GAS APPLIANCES INCLUDING DRYERS, FURNACES, WATER HEATERS, BOILERS, ETC. IN COMPLIANCE WITH SECTION G2407. THE INSTALLATION OF A FULL LOUVERED DOOR OR TWO AIR TRANFER GRILLS (MINIMUM 100 SQ IN OF FREE AREA EACH AND LOCATED WITHIN 12" OF THE FLOOR AND CEILING) ARE CODE COMPLIANT.
   4.1. FOR ENCLOSED LAUNDRY OR FURNACE ROOM, THE INSTALLATION OF A FULL LOUVERED DOOR OR TWO AIR TRANSFER GRILLS (MINIMUM 100 SQ IN OF FREE AREA EACH AND LOCATED WITHIN 12" OF THE FLOOR AND CEILING) ARE CODE COMPLIANT.
5. PROVIDE A PROGRAMMABLE THERMOSTAT FOR EACH FURNACE/BOILER.
6. ALL SUPPLY DUCTS IN ATTICS AND UN-HEATED SPACES SHALL BE SHEET METAL AND INSULATED, SEE SECTION 14 IECC.
7. ALL RETURN DUCTS SHALL BE IN SHEET METAL, USING STUD OR JOIST BAYS ARE NOT ALLOWED.
8. ALL DUCTWORK JOISTS SHALL BE TAPED AS ALLOWED BY CODE TO PREVENT AIR LEAKAGE.
9. THE DUCTWORK IS TO RUN BETWEEN JOISTS AS MUCH AS POSSIBLE TO KEEP THE BASEMENT CEILING AS CLEAN AS POSSIBLE.
10. PROVIDE ONE OR MORE SUPPLY REGISTERS IN THE BASEMENT TO ENSURE A WARM FLOOR AND PREVENT FREEZING OF THE HOSE BIB.
11. PROVIDE ANY NECESSARY ELECTRICAL AND GAS CONNECTIONS TO THE FURNACE, THERMOSTAT, ETC.
12. PROVIDE VENT TO EXTERIOR FOR NEW FURNACES AS REQUIRED AND AS SHOWN ON DRAWINGS.
13. CLASS B VENTS TO HAVE A MINIMUM 1" CLEARANCE TO ALL COMBUSTIBLES AND TO BE FIRESTOPPED AT FLOORS.
14. BATHROOM AND DRYER EXHAUST SHALL BE VENTED DIRECTLY TO THE EXTERIOR WITH FLUSH CAPS AND BACKDRAFT DAMPER, USING 4"CONTINUOUS SHEET METAL.
   15. EXHAUST HOOD NOTE: INSTALL THE RANGE HOOD EXHAUST SYSTEM. INCLUDE ALL DUCTWORK (HARD PIPE ONLY), FLASHING, INSULATION, WEATHER-STRIPPING, BACKDRAFT DAMPER, ETC. AND EXHAUST DIRECTLY TO THE EXTERIOR.
   15.1. IT IS ASSUMED THAT KITCHEN EXHAUST HOOD TO PROVIDE A MINIMUM OF 100 CFM (INTERMITTENT) AND 400 CFM OF EXHAUST MAXIMUM.
   15.2. THE EXACT SIZE OF THE EXHAUST HOOD TO BE DETERMINED IN THE FIELD WHEN APPLIANCES FINALIZED.
   15.3. IN THE EVENT THAT THE HOOD EXHAUST IS GREATER THAN 400 CFM, THEN THE CONTRACTOR SHALL PROVIDE MAKEUP AIR AT A RATE APPROXIMATELY EQUAL TO THE EXHAUST AIR RATE. SUCH MAKE AIR SYSTEMS SHALL BE EQUIPPED WITH A MEANS OF CLOSURE AND SHALL BE AUTOMATICALLY CONTROLLED TO START AND OPERATE SIMULTANEOUSLY WITH THE EXHAUST HOOD. CONTRACTOR TO PROVIDE SPECIFICATIONS OF BOTH THE EXHAUST HOOD AND THE MAKEUP AIR SYSTEM (IF REQ'D) TO THE BUILDING OFFICIAL AT THE TIME OF THE INSPECTIONS.
16. TYING DUCT WORK OF MULTIPLE EXHAUST VENTS TOGETHER FOR SHARED EXHAUST TO EXTERIOR IS NOT ALLOWED.
17. HAVE COPY OF EQUIPMENT INSTALLATION MANUALS TIED TO GAS & ELECTRIC ON SITE AT TIME OF ROUGH INSPECTION. SEE SECTION 13 – ELECTRIC, #5.
18. SEE SECTION 13 – FINISHES, #1 & #2 FOR ADDITIONAL NOTES.
19. SEE SECTION 14 – IE.C.C. #12 FOR WHOLE-HOUSE VENTILATION SYSTEM NOTES.

SECTION 11 – PLUMBING

1. ALL PLUMBING WORK SHALL BE PERFORMED UNDER THE SUPERVISION OF A LICENSED PLUMBER.
2. WORKMANSHIP SHALL BE THE BEST STANDARD MADE BY THE TRADE.
3. WATER SUPPLY:
   3.1. VALVE SHALL BE APPROPRIATE TO USE & TO ADJACENT PIPING MATERIAL. PROVIDE SHUT OFF VALVES TO ALL SUPPLY LINES AT EACH FURNACE, BOILER, APPLIANCE, OR FIXTURE.
   3.2. ALL WATER PIPES TO FIXTURES SHALL BE VALVED.
   3.3. UNDERGROUND WATER PIPING SHALL BE COPPER TYPE K WITH FLARED FITTINGS.
   3.4. SUSPENDED WATER PIPING SHALL BE COPPER TYPE L WITH LEAD-FREE SOLDER.
   3.5. PROVIDE FREEZE-PROOF HOSE BIBS WHERE INDICATED ON DRAWINGS WITH VACUUM BREAKERS.
   3.6. PROVIDE A GREY BOX WITH SELL FACETS AND ONE STANDPIPE AND 2" DRAIN FOR EACH CLOTHES WASHER. VERIFY EXACT LOCATION WITH BUILDER PRIOR TO ROUGH AND COORDINATE WITH SELECTED WASHER.
   3.7. PROVIDE A 12"AIR CHAMBER AT EVERY FIXTURE AND A 24"AIR CHAMBER AT THE TOP OF RISERS.
   3.8. WATER CLOSETS 1.6 GALLON PER FLUSH MAXIMUM, SHOWER, LAVS AND SINKS, 3 GALLON PER MINUTE FLOW CONTROL.
   3.9. AT DISHWASHERS, PROVIDE WATER CONNECTION WITH SHUTOFF VALVE AND A METHOD OF DISCHARGE NOT THROUGH DISPOSAL.
   3.10. PROVIDE VALVE AT BOTH SIDES OF METER FOR DRAINAGE.
   3.11. PROVIDE WATER LINE TO REFRIGERATOR WITH ICE MAKERS WITH SHUT OFF AT APPLIANCE. FLEXIBLE COPPER TUBING ONLY ALLOWED FROM SHUT OFF TO APPLIANCE. NO TAP CONNECTIONS ALLOWED.
   3.11. PROVIDE HIGH EFFICIENT GAS DOMESTIC HOT WATER HEATERS WITH PVC DISCHARGE PER BUILDER'S SPECIFICATIONS. CONNECT WATER HEATERS IN SERIES IF MORE THAN ONE.
4. SEWER SYSTEM:
   4.1. INTERIOR ABOVE GROUND WASTE AND VENT PIPING AND FITTINGS SHALL BE PVC SCHEDULE 40.
   4.2. INTERIOR UNDER GROUND WASTE AND VENT PIPING AND FITTINGS SHALL BE PVC SCHEDULE 40.
   4.3. EXTERIOR WASTE PIPING SHALL BE 6"DIA. PVC SCHEDULE 40.
   4.4. PROVIDE CLEAN-OUTS IN WASTE AND SOIL LINE FOR EACH CHANGE OF DIRECTION GREATER THAN 45 DEGREES AND AT TOP OF EACH STACK.
   6.5. PROVIDE SEWAGE EJECTOR IF BELOW FLOOR FLUSH WITH BASEMENT SLAB IF BASEMENT WASTE LINES ARE LOWER THAN EXISTING SANITARY SEWER TO STREET OR AS OTHERWISE REQUIRED.
   6.6. PROVIDE SEWAGE PUMP AND SUMP PUMP PER BUILDER'S SPECIFICATIONS. SUMP PUMP TO INCLUDE PVC DISCHARGE LINES WITH BACKWATER VALVE. PROVIDE DISCHARGE TO EXTERIOR. REFER TO BUILDER'S SPECIFICATIONS AND CIVIL ENGINEERING DRAWINGS FOR ANY EXTERIOR CONNECTIONS (IF ANY).
   6.7. CONNECT INTERIOR BASEMENT FIXTURE DRAINS AND ANY BASEMENT PLUMBING TO THE EJECTOR PIT.
   6.8. CONNECT ALL EXTERIOR BASEMENT WINDOW WELL DRAINS TO PERIMETER DRAIN AND THE SUMP PIT.
   6.9. TOP OF THE SEL CAN NOT BE ANY MORE THAN 44" ABOVE THE FLOOR. SEE SECTION 3 – CONCRETE #15 FOR BASEMENT EGRESS WINDOW.
   6. WINDOW SILL: WHERE THE OPENING OF AN OPERABLE WINDOW IS LOCATED MORE THAN 72" ABOVE THE FINISHED GRADE OR STRUCTURE BELOW ON THE EXTERIOR OF THE BUILDING, THE LOWEST PART OF THE CLEAR OPENING OF THE WINDOW SILL SHALL BE AT LEAST 24" AFF ON THE INSIDE OF THE BUILDING. IF THE CLEAR OPENING IS LESS THAN 24", THEN A WINDOW OPENING CONTROL DEVICE (W.O.D.C.) COMPLYING WITH ASTM F2090, SHALL BE PROVIDED ON THE WINDOW. THE W.O.D.C. SHALL ALLOW THE WINDOW TO OPEN NO MORE THAN WAY WOULD NOT ALLOW A 4" SPHERE TO PASS THRU, BUT AFTER THE CONTROL DEVICE IS RELEASED, IT WOULD ALLOW THE WINDOW TO FULLY OPEN.
7. ALL EXTERIOR DOORS TO BE FULLY WEATHER-STRIPPED AND INSULATED.
8. COMMON WALL DOOR BETWEEN GARAGE AND LIVING SPACE SHALL BE 20 MINUTE (MIN.) LABELED DOOR WITH SELF CLOSING HINGES AND SELF LATCHING, U.N.O.
9. ALL DOORS & DOOR HARDWARE PER BUILDER'S SPECIFICATIONS.
10. IF ANY DEAD BOLTS INSTALLED, THEY MUST BE THUMB TURN AT INSIDE, KEY AT OUTSIDE.
11. PROVIDE JAMB EXTENSIONS FOR DOORS & WINDOWS LOCATED IN ALL WALLS THICKER THAN 2x4. VERIFY WITH FLOOR PLAN WALL THICKNESS.

SECTION 10 – HVAC

1. ALL HEATING AND COOLING EQUIPMENT SHALL BE SIZED BY HVAC CONTRACTOR USING MANUAL S & MANUAL J. SEE SECTION 14 – IECC, #12 FOR MORE INFORMATION.
2. THE HEATING SYSTEM SHALL BE DESIGNED TO OPERATE AT 72 DEGREES F INSIDE AT 4'-0"ABOVE THE FLOOR WHEN IT IS -10 DEGREES OUTSIDE WITH A 15 MPH WIND. AND THE COOLING SYSTEM MUST PROVIDE 70 DEGREES F COOLING WHEN THE OUTSIDE TEMPERATURE IS 95 DEGREES F.
3. HVAC SYSTEM SHALL BE PER BUILDER'S SPECIFICATIONS.
4. PROVIDE COMBUSTION AIR FOR ALL FUEL GAS APPLIANCES INCLUDING DRYERS, FURNACES, WATER HEATERS, BOILERS, ETC. IN COMPLIANCE WITH SECTION G2407. THE INSTALLATION OF A FULL LOUVERED DOOR OR TWO AIR TRANFER GRILLS (MINIMUM 100 SQ IN OF FREE AREA EACH AND LOCATED WITHIN 12" OF THE FLOOR AND CEILING) ARE CODE COMPLIANT.
   4.1. FOR ENCLOSED LAUNDRY OR FURNACE ROOM, THE INSTALLATION OF A FULL LOUVERED DOOR OR TWO AIR TRANSFER GRILLS (MINIMUM 100 SQ IN OF FREE AREA EACH AND LOCATED WITHIN 12" OF THE FLOOR AND CEILING) ARE CODE COMPLIANT.
5. PROVIDE A PROGRAMMABLE THERMOSTAT FOR EACH FURNACE/BOILER.
6. ALL SUPPLY DUCTS IN ATTICS AND UN-HEATED SPACES SHALL BE SHEET METAL AND INSULATED, SEE SECTION 14 IECC.
7. ALL RETURN DUCTS SHALL BE IN SHEET METAL, USING STUD OR JOIST BAYS ARE NOT ALLOWED.
8. ALL DUCTWORK JOISTS SHALL BE TAPED AS ALLOWED BY CODE TO PREVENT AIR LEAKAGE.
9. THE DUCTWORK IS TO RUN BETWEEN JOISTS AS MUCH AS POSSIBLE TO KEEP THE BASEMENT CEILING AS CLEAN AS POSSIBLE.
10. PROVIDE ONE OR MORE SUPPLY REGISTERS IN THE BASEMENT TO ENSURE A WARM FLOOR AND PREVENT FREEZING OF THE HOSE BIB.
11. PROVIDE ANY NECESSARY ELECTRICAL AND GAS CONNECTIONS TO THE FURNACE, THERMOSTAT, ETC.
12. PROVIDE VENT TO EXTERIOR FOR NEW FURNACES AS REQUIRED AND AS SHOWN ON DRAWINGS.
13. CLASS B VENTS TO HAVE A MINIMUM 1" CLEARANCE TO ALL COMBUSTIBLES AND TO BE FIRESTOPPED AT FLOORS.
14. BATHROOM AND DRYER EXHAUST SHALL BE VENTED DIRECTLY TO THE EXTERIOR WITH FLUSH CAPS AND BACKDRAFT DAMPER, USING 4"CONTINUOUS SHEET METAL.
   15. EXHAUST HOOD NOTE: INSTALL THE RANGE HOOD EXHAUST SYSTEM. INCLUDE ALL DUCTWORK (HARD PIPE ONLY), FLASHING, INSULATION, WEATHER-STRIPPING, BACKDRAFT DAMPER, ETC. AND EXHAUST DIRECTLY TO THE EXTERIOR.
   15.1. IT IS ASSUMED THAT KITCHEN EXHAUST HOOD TO PROVIDE A MINIMUM OF 100 CFM (INTERMITTENT) AND 400 CFM OF EXHAUST MAXIMUM.
   15.2. THE EXACT SIZE OF THE EXHAUST HOOD TO BE DETERMINED IN THE FIELD WHEN APPLIANCES FINALIZED.
   15.3. IN THE EVENT THAT THE HOOD EXHAUST IS GREATER THAN 400 CFM, THEN THE CONTRACTOR SHALL PROVIDE MAKEUP AIR AT A RATE APPROXIMATELY EQUAL TO THE EXHAUST AIR RATE. SUCH MAKE AIR SYSTEMS SHALL BE EQUIPPED WITH A MEANS OF CLOSURE AND SHALL BE AUTOMATICALLY CONTROLLED TO START AND OPERATE SIMULTANEOUSLY WITH THE EXHAUST HOOD. CONTRACTOR TO PROVIDE SPECIFICATIONS OF BOTH THE EXHAUST HOOD AND THE MAKEUP AIR SYSTEM (IF REQ'D) TO THE BUILDING OFFICIAL AT THE TIME OF THE INSPECTIONS.
16. TYING DUCT WORK OF MULTIPLE EXHAUST VENTS TOGETHER FOR SHARED EXHAUST TO EXTERIOR IS NOT ALLOWED.
17. HAVE COPY OF EQUIPMENT INSTALLATION MANUALS TIED TO GAS & ELECTRIC ON SITE AT TIME OF ROUGH INSPECTION. SEE SECTION 13 – ELECTRIC, #5.
18. SEE SECTION 17 – FINISHES, #1 & #2 FOR ADDITIONAL NOTES.

SECTION 12 – ELECTRICAL

1. ELECTRICAL DRAWINGS ARE PROVIDED IN A SCHEMATIC NATURE. THE ELECTRICAL CONTRACTOR SHALL DO INCIDENTAL PANEL LOAD CALCULATIONS AND ENSURE ADEQUATE ELECTRICAL SERVICE TO START OF PROJECT. THE ELECTRICAL CONTRACTOR SHALL PROVIDE A CIRCUIT DIAGRAM TO THE LOCAL AUTHORITY IF REQUIRED OR REQUESTED.
2. PROVIDE NEW 200 AMPERE SINGLE PHASE UNDERGROUND SERVICE WITH ONE 200-AMPERE PANEL WITH 40 POLE SPACES (MIN) AND MAIN SHUT OFF. PROVIDE BREAKERS AS REQUIRED.
   2.1. A MINIMUM OF 10% OF THE ELECTRIC PANEL SPACE SHOULD BE LEFT OPEN FOR FUTURE EXPANSION.
   2.2. EVERY CIRCUIT ON BRANCH CIRCUITS SHALL BE ACCESSIBLE BY A DOOR OR ACCESS PANEL SHALL HAVE THE "SPECIFIC PURPOSE/USE" THE CONTROLS SHALL BE INCLUDED WITHIN THE DOOR OF THE ELECTRICAL PANEL.
   2.3. WINDOW 30" DEPTH X 30" WIDTH X 78" HEIGHT MIN. CLEAR FLOOR SPACE IN FRONT OF ELECTRICAL PANEL.
   2.4. PROVIDE ARC FAULT CIRCUIT BREAKERS AS REQUIRED BY CODE.
   2.5. ALL WIRE TO BE COPPER WIRE THROUGHOUT AND INSTALLED IN METAL CONDUIT.
   2.6. NO/KIT OF WIRING, CONDUITS, ETC. MUST BE SUPPORTED FROM THE STRUCTURE, INDEPENDENT FROM ANY SUSPENDED CEILINGS.
   2.7. ALL EQUIPMENT AND APPLIANCES, INCLUDING FURNACES, A/C UNITS, WATER HEATERS, WASHERS, DRYERS, RANGE HOODS, MICROWAVE OVENS, REFRIGERATORS, RANGES, DISHWASHERS, DISPOSALS, KITCHEN EXHAUST HOODS, ETC. SHALL BE INSTALLED IN SUCH A MANNER AS TO BE SECURELY RETAINED IN PLACE, OR CELLULOSE INSULATION INSTALLED AS TESTED IN ACCORDANCE WITH ASTM E119 OR UP 263, FOR THE SPECIFIC APPLICATION.

SECTION 8 – MOISTURE/THERMAL CONTROL

1. SEE SECTION 14 – IE.C.C. #2 FOR ALL PLANS AND WALL SECTIONS FOR INSULATION REQUIREMENTS.
2. ALL INSULATION SHALL BE PER BUILDER'S SPECIFICATIONS AND AT A MINIMUM, AS ALLOWED BY CODE.
3. PROVIDE A VAPOR BARRIER ON THE WARM SIDE OF THE CONSTRUCTION, UNLESS NOTED OTHERWISE.
4. ALL GAPS AND SPACES AROUND EXTERIOR DOOR AND WINDOW FRAMES AND ALL HOLES PENETRATING UNHEATED SPACES SHALL RECEIVE SANE INSULATION AS SURROUNDING AREA.
5. PROVIDE VENT CHUTES AT ROOF EAVES TO M

C1 FRONT ELEVATION
1/4" = 1'-0"

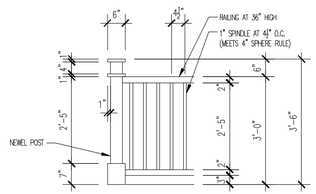

B1 EXTERIOR RAILING DETAIL
1/2" = 1'-0"

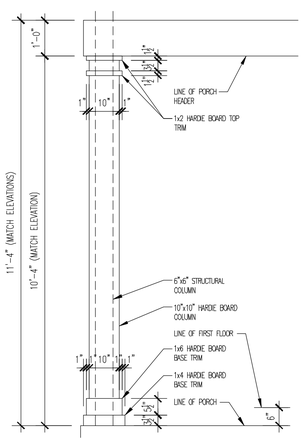

A1 COLUMN DETAIL
1/2" = 1'-0"

WINDOW SILL NOTE:
WHERE THE OPENING OF AN OPERABLE WINDOW IS LOCATED MORE THAN 72" ABOVE THE FINISHED GRADE, THE LOWEST PART OF THE CLEAR OPENING SHALL BE AT LEAST 24" A.F.F. – ADJUST WINDOW HEIGHT AS REQUIRED.

A2 LEFT SIDE ELEVATION
1/4" = 1'-0"

EXTERIOR ELEVATION KEYNOTE LEGEND:

1. CONCRETE FOOTING
2. CONCRETE FOUNDATION
3. CONCRETE PORCH
4. 8" CONCRETE WING WALL
5. 42" BELOW GRADE CONCRETE PIER
6. BRICK PIER AT PORCH
7. 6x6 WOOD POST ON METAL POST ANCHOR SET IN CONCRETE (7" EMBEDMENT) WRAP POST W/1x HARDIE BOARD PER BUILDER'S STANDARDS
8. BRICK
9. STONE CAP
10. STONE SILL AT DOOR
11. NEW HORIZONTAL STONE SILL TO MATCH HERITAGE PLACE TOWN HOMES (SEE A1/A1.20)
12. HORIZONTAL STONE CAP/ACCENT
13. NEW HORIZONTAL STONE HEADER AT WINDOWS AND DOORS TO MATCH HERITAGE PLACE TOWN HOMES (SEE A1/A1.20)
14. 8"x8" DECORATIVE STONE ACCENT
15. HERRINGBONE BRICK ACCENT
16. 1x CONTINUOUS CORNER BOARDS
17. DECORATIVE 3"x4" HARDIE BOARD CORBEL SET AT 12" O.C.
18. HARDIE BOARD WRAPPED BEAM
19. FLAT HARDIE BOARD ROOF
20. EXISTING FLAT ROOF (REBUILT–SEE B4/A3.10)
21. EXPOSED METAL FLASHING @ ROOF & MASONRY WALL INTERSECTIONS (TYP ALL)
22. CONCEALED METAL FLASHING @ ROOF & WALL INTERSECTIONS (TYP ALL)
23. HORIZONTAL HARDIE BOARD SIDING
24. 1x4 HARDIE BOARD TRIM @ ATTIC WINDOWS
25. ASPHALT SHINGLES (COLOR TBD)
26. 1x2 ON 1x8 HARDIE BOARD ROOF RAKE
27. EGRESS LADDER REQUIRED
28. BASEMENT WINDOW AND CONCRETE WELL AREA
29. DRAIN TILE TO PERIMETER TILE (PROVIDE SCREEN)
30. 36" H RAILING (MEETS 4" SPHERE RULE)
31. ADDRESS STONE w/5" HIGH NUMBERS
32. MAILBOX
33. FIREPLACE EXHAUST
34. EXTERIOR GRADE WALL MOUNTED LIGHT
35. DEMISING WALL BETWEEN UNITS W/ALUMINUM WALL CAP
36. LINE OF INTERIOR WALL AT ATTIC BEHIND
37. LINE OF STAIRS AND LANDING BEHIND
38. ADJUST SIDEWALK AS REQUIRED TO MAINTAIN STEPS (7½" MAX RISER) FROM PORCH
39. CONCRETE STEPS TO GRADE
40. COMPOSITE DECK
41. ALUMINUM SCUPPER AT DOWNSPOUT (COPPER-LIKE COLOR)
42. 6" K-STYLE GUTTERS & 2x3 COPPERLIKE DOWNSPOUTS (OVERSIZED) (COPPER-LIKE COLOR)
43. MODIFIED ROOF BEARING
44. SAW CUT & TOOTH IN MASONRY AS REQUIRED
45. TOOTH IN MASONRY AS REQUIRED
46. REMOVE EXISTING STONE SILL COMPLETELY (REUSE IF POSSIBLE)
47. PATCH STONE ACCENT AS POSSIBLE
48. DRYER OR BATH FAN VENT
49. REMOVE EXISTING COAL CHUTE & PATCH FOUNDATION AND MASONRY (TOOTH IN) AS REQUIRED
50. WOOD STEPS TO GRADE
51. REMOVE EXISTING STAIRS AND METAL RAILING SYSTEM AND REPLACE WITH A WOOD PAINTED STAIR SYSTEM IN SAME LOCATION AND RAILING SYSTEM IN SAME DESIGN DETAIL AS THE RAILING SYSTEM EXISTING TODAY (GREEN RAILS). NEW RAIL COLOR WOULD BE EXTRA WHITE SW 7006. IF THE ORIGINAL RAILING SYSTEM DESIGN CANNOT BE REPLICATED IN COMPLIANCE WITH BUILDING CODE, A DESIGN SIMILAR TO THE EXISTING IS REQUIRED.
52. ADD WOOD PAINTED RAILING SYSTEM IN SAME DESIGN DETAIL AS THE RAILING SYSTEM EXISTING TODAY (GREEN RAILS) BUT THEY WILL BE PAINTED WHITE SW 7006 EXTRA WHITE. IF THE ORIGINAL RAILING SYSTEM DESIGN CANNOT BE REPLICATED IN COMPLIANCE WITH BUILDING CODE, A DESIGN SIMILAR TO THE EXISTING IS REQUIRED.
53. WOOD PAINTED STAIR SYSTEM WITH RAILINGS TO MATCH THE RAILINGS ON FRONT OF MANSION AT PORCH. IF THE ORIGINAL RAILING SYSTEM DESIGN CANNOT BE REPLICATED IN COMPLIANCE WITH BUILDING CODE, A DESIGN SIMILAR TO THE EXISTING IS REQUIRED.
54. AC UNIT
55. DRAIN AT BALCONY
56. LINE OF FRAMING OR SOFFIT BEHIND
57. WINDOW TO BE FIXED DUE TO PROXIMITY TO FIREPLACE FLUE
58. APPROXIMATE LOCATION OF FURNACE VENTS

E	EGRESS	F	FIXED
EX	EXISTING TO REMAIN	T	TEMPERED
C	PROVIDE WINDOW OPENING CONTROL DEVICE PER ASTM 2090 FOR WINDOW UNITS (TYP). MAXIMUM ALLOWABLE OPENING NOT TO EXCEED 4" CLEAR OPENING. DEVICE SHALL ALSO ALLOW UNIT TO OPEN FULLY AS ALLOWED BY ASTM 2090.		
F0	BASEMENT FLOOR LINE	C0	BASEMENT CEILING LINE
F1	FIRST FLOOR LINE	C1	FIRST FLOOR CEILING LINE
F2	SECOND FLOOR LINE	C2	SECOND FLOOR CEILING LINE
F3	ATTIC FLOOR LINE	C3	ATTIC FLOOR CEILING LINE

EGRESS WINDOW NOTE:
EGRESS WINDOWS SHALL HAVE AT LEAST 5.7 S.F. OF CLEAR OPENING (EXCEPT GRADE LEVEL WINDOWS WHICH CAN HAVE 5.0 S.F.) AND HAVE A MINIMUM CLEAR WIDTH OF 20" AND A MINIMUM CLEAR HEIGHT OF 24" AND THE TOP OF THE SILL CAN NOT BE ANY MORE THAN 44" ABOVE THE FLOOR. (SEE WINDOW SILL NOTE).

2302016-A1.10.DWG

ARCHITECT
Craftstone Architects, Inc
14150 S. Route 30, Suite 201
Plainfield, Illinois 60544
P: (815) 609-1997 F: (815) 327-8827
www.CraftstoneArchitects.com
Professional Design Firm #: 184-005597

BUILDER
DJK CUSTOM HOMES
2 2 2 2 N NAK R P RIVER P

DESIGNER
DJK CUSTOM DESIGN
B=963.939.3686
T=4187913937

MICHAEL A. BUHR
LICENSED ARCHITECT
001-015688
STATE OF ILLINOIS
01-09-2025 | 11-30-2026
DATED | EXPIRES

01-09-2025	1	FOR BLDG DEPT. & OWNER COMMENTS 12/16/2024
11-22-2024	1	FOR BLDG DEPT. & OWNER COMMENTS 11/07/2024
09-23-2024	1	PERMIT-BID

Heritage Place Mansion Remodel
126 & 128 N Wright St.
Naperville, IL 60563

Naperville 10/20/2025 PLAN REVIEW RESULTS Reviewed for Code Compliance

EXTERIOR ELEVATIONS - FRONT & LEFT SIDE

DRAWN BY: EAO
CHECKED BY: MAB

PROJECT NUMBER: 2302016

SHEET NUMBER:
A1.10
OF 19 SHEETS

© 2025 by Craftstone Architects, Inc.

C1 REAR ELEVATION
1/4" = 1'-0"

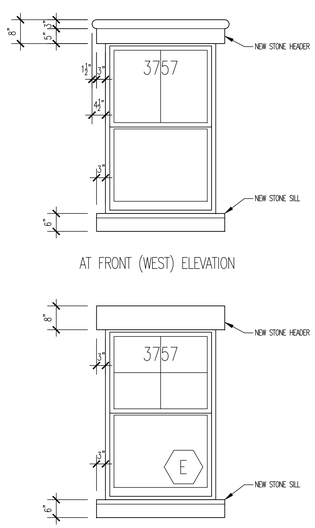

A1 HEADER DETAILS
1/2" = 1'-0"

A2 RIGHT SIDE ELEVATION
1/4" = 1'-0"

WINDOW SILL NOTE:
WHERE THE OPENING OF AN OPERABLE WINDOW IS LOCATED MORE THAN 72" ABOVE THE FINISHED GRADE, THE LOWEST PART OF THE CLEAR OPENING SHALL BE AT LEAST 24" A.F.F. – ADJUST WINDOW HEIGHT AS REQUIRED.

EXTERIOR ELEVATION KEYNOTE LEGEND:

1. CONCRETE FOOTING
2. CONCRETE FOUNDATION
3. CONCRETE PORCH
4. 8" CONCRETE WING WALL
5. 42" BELOW GRADE CONCRETE PIER
6. BRICK PIER AT PORCH
7. 6x6 WOOD POST ON METAL POST ANCHOR SET IN CONCRETE (7" EMBEDMENT) WRAP POST W/1x HARDIE BOARD PER BUILDER'S STANDARDS
8. BRICK
9. STONE CAP
10. STONE SILL AT DOOR
11. NEW HORIZONTAL STONE SILL TO MATCH HERITAGE PLACE TOWN HOMES (SEE A1/A1.20)
12. HORIZONTAL STONE CAP/ACCENT
13. NEW HORIZONTAL STONE HEADER AT WINDOWS AND DOORS TO MATCH HERITAGE PLACE TOWN HOMES (SEE A1/A1.20)
14. 8"x8" DECORATIVE STONE ACCENT
15. HERRINGBONE BRICK ACCENT
16. 1x CONTINUOUS CORNER BOARDS
17. DECORATIVE 3"x4" HARDIE BOARD CORBEL SET AT 12" O.C.
18. HARDIE BOARD WRAPPED BEAM
19. FLAT HARDIE BOARD ROOF
20. EXISTING FLAT ROOF (REBUILT–SEE B4/A3.10)
21. EXPOSED METAL FLASHING @ ROOF & MASONRY WALL INTERSECTIONS (TYP ALL)
22. CONCEALED METAL FLASHING @ ROOF & WALL INTERSECTIONS (TYP ALL)
23. HORIZONTAL HARDIE BOARD SIDING
24. 1x4 HARDIE BOARD TRIM @ ATTIC WINDOWS
25. ASPHALT SHINGLES (COLOR TBD)
26. 1x2 ON 1x8 HARDIE BOARD ROOF RAKE
27. EGRESS LADDER REQUIRED
28. BASEMENT WINDOW AND CONCRETE WELL AREA
29. DRAIN TILE TO PERIMETER TILE (PROVIDE SCREEN)
30. 36" H RAILING (MEETS 4" SPHERE RULE)
31. ADDRESS STONE w/5" HIGH NUMBERS
32. MAILBOX
33. FIREPLACE EXHAUST
34. EXTERIOR GRADE WALL MOUNTED LIGHT
35. DEMISING WALL BETWEEN UNITS W/ALUMINUM WALL CAP
36. LINE OF INTERIOR WALL AT ATTIC BEHIND
37. LINE OF STAIRS AND LANDING BEHIND
38. ADJUST SIDEWALK AS REQUIRED TO MAINTAIN STEPS (7¾" MAX RISER) FROM PORCH
39. CONCRETE STEPS TO GRADE
40. COMPOSITE DECK
41. ALUMINUM SCUPPER AT DOWNSPOUT (COPPER-LIKE COLOR)
42. 6" K-STYLE GUTTERS & 2x3 COPPERLIKE DOWNSPOUTS (OVERSIZED) (COPPER-LIKE COLOR)
43. MODIFIED ROOF BEARING
44. SAW CUT & TOOTH IN MASONRY AS REQUIRED
45. TOOTH IN MASONRY AS REQUIRED
46. REMOVE EXISTING STONE SILL COMPLETELY (REUSE IF POSSIBLE)
47. PATCH STONE ACCENT AS POSSIBLE
48. DRYER OR BATH FAN VENT
49. REMOVE EXISTING COAL CHUTE & PATCH FOUNDATION AND MASONRY (TOOTH IN) AS REQUIRED
50. WOOD STEPS TO GRADE
51. REMOVE EXISTING STAIRS AND METAL RAILING SYSTEM AND REPLACE WITH A WOOD PAINTED STAIR SYSTEM IN SAME LOCATION AND RAILING SYSTEM IN SAME DESIGN DETAIL AS THE RAILING SYSTEM EXISTING TODAY (GREEN RAILS). NEW RAIL COLOR WOULD BE EXTRA WHITE-SW 7006. IF THE ORIGINAL RAILING SYSTEM DESIGN CANNOT BE REPLICATED IN COMPLIANCE WITH BUILDING CODE, A DESIGN SIMILAR TO THE EXISTING IS REQUIRED.
52. ADD WOOD PAINTED RAILING SYSTEM IN SAME DESIGN DETAIL AS THE RAILING SYSTEM EXISTING TODAY (GREEN RAILS) BUT THEY WILL BE PAINTED WHITE SW 7006 EXTRA WHITE. IF THE ORIGINAL RAILING SYSTEM DESIGN CANNOT BE REPLICATED IN COMPLIANCE WITH BUILDING CODE, A DESIGN SIMILAR TO THE EXISTING IS REQUIRED.
53. WOOD PAINTED STAIR SYSTEM WITH RAILINGS TO MATCH THE RAILINGS ON FRONT OF MANSION AT PORCH. IF THE ORIGINAL RAILING SYSTEM DESIGN CANNOT BE REPLICATED IN COMPLIANCE WITH BUILDING CODE, A DESIGN SIMILAR TO THE EXISTING IS REQUIRED.
54. AC UNIT
55. DRAIN AT BALCONY
56. LINE OF FRAMING OR SOFFIT BEHIND
57. WINDOW TO BE FIXED DUE TO PROXIMITY TO FIREPLACE FLUE
58. APPROXIMATE LOCATION OF FURNACE VENTS

E	EGRESS	F	FIXED
EX	EXISTING TO REMAIN	T	TEMPERED
C	PROVIDE WINDOW OPENING CONTROL DEVICE PER ASTM 2090 FOR WINDOW UNITS (TYP). MAXIMUM ALLOWABLE OPENING NOT TO EXCEED 4" CLEAR OPENING. DEVICE SHALL ALSO ALLOW UNIT TO OPEN FULLY AS ALLOWED BY ASTM 2090.		
F0	BASEMENT FLOOR LINE	C0	BASEMENT CEILING LINE
F1	FIRST FLOOR LINE	C1	FIRST FLOOR CEILING LINE
F2	SECOND FLOOR LINE	C2	SECOND FLOOR CEILING LINE
F3	ATTIC FLOOR LINE	C3	ATTIC FLOOR CEILING LINE

EGRESS WINDOW NOTE:
EGRESS WINDOWS SHALL HAVE AT LEAST 5.7 S.F. OF CLEAR OPENING (EXCEPT GRADE LEVEL WINDOWS WHICH CAN HAVE 5.0 S.F.) AND HAVE A MINIMUM CLEAR WIDTH OF 20" AND A MINIMUM CLEAR HEIGHT OF 24" AND THE TOP OF THE SILL CAN NOT BE ANY MORE THAN 44" ABOVE THE FLOOR. (SEE WINDOW SILL NOTE).

2302016-A1.20.DWG

ARCHITECT
Craftstone Architects, Inc
14150 S. Route 30, Suite 201
Plainfield, Illinois 60544
P: (815) 609-1997 F: (815) 327-8827
www.CraftstoneArchitects.com
Professional Design Firm #: 184-005597

BUILDER
DJK CUSTOM HOMES
Z Z Z, LLC
DESIGNER
DJK CUSTOM DESIGN
B=963.939.3646
T=4437631937

LICENSED ARCHITECT
MICHAEL A. BUHR
001-015688
STATE OF ILLINOIS
01-09-2025 | 11-30-2026
DATED | EXPIRES

01-09-2025	FOR BLDG DEPT & OWNER COMMENTS 12/16/2024
11-22-2024	FOR BLDG DEPT & OWNER COMMENTS 11/07/2024
09-23-2024	PERMIT-BID

Heritage Place Mansion Remodel
126 & 128 N Wright St.
Naperville, IL 60563

Naperville 01/09/2025 BUILDING DIVISION REVIEWED Reviewed for Code Compliance

EXTERIOR ELEVATIONS REAR & LEFT SIDE

DRAWN BY: EAO
CHECKED BY: MAB

PROJECT NUMBER: 2302016

SHEET NUMBER: A1.20

OF 19 SHEETS

© 2025 by Craftstone Architects, Inc.

Attached: C:\2302016_DJK-TITLEBLOCK\1.2302016-ELEV | 2302016-Alternate Elevation [v-C 1990275-alphaimaxwebtoga.pwg | D>
Plotted: 01-09-2025|4:29pm (UCAD Ver:24.0s (LMS Tech))
Border: Rev 2030|-|-|1.5
Plotter: DWG To PDF.pc3|Full page

GENERAL PLAN NOTES:
1. REMOVE ALL EXISTING DOORS & WINDOWS
2. ALL EXISTING MASONRY TO REMAIN AS POSSIBLE
3. REMOVE ALL EXISTING DRYWALL
4. REMOVE ALL EXISTING PLUMBING FIXTURES

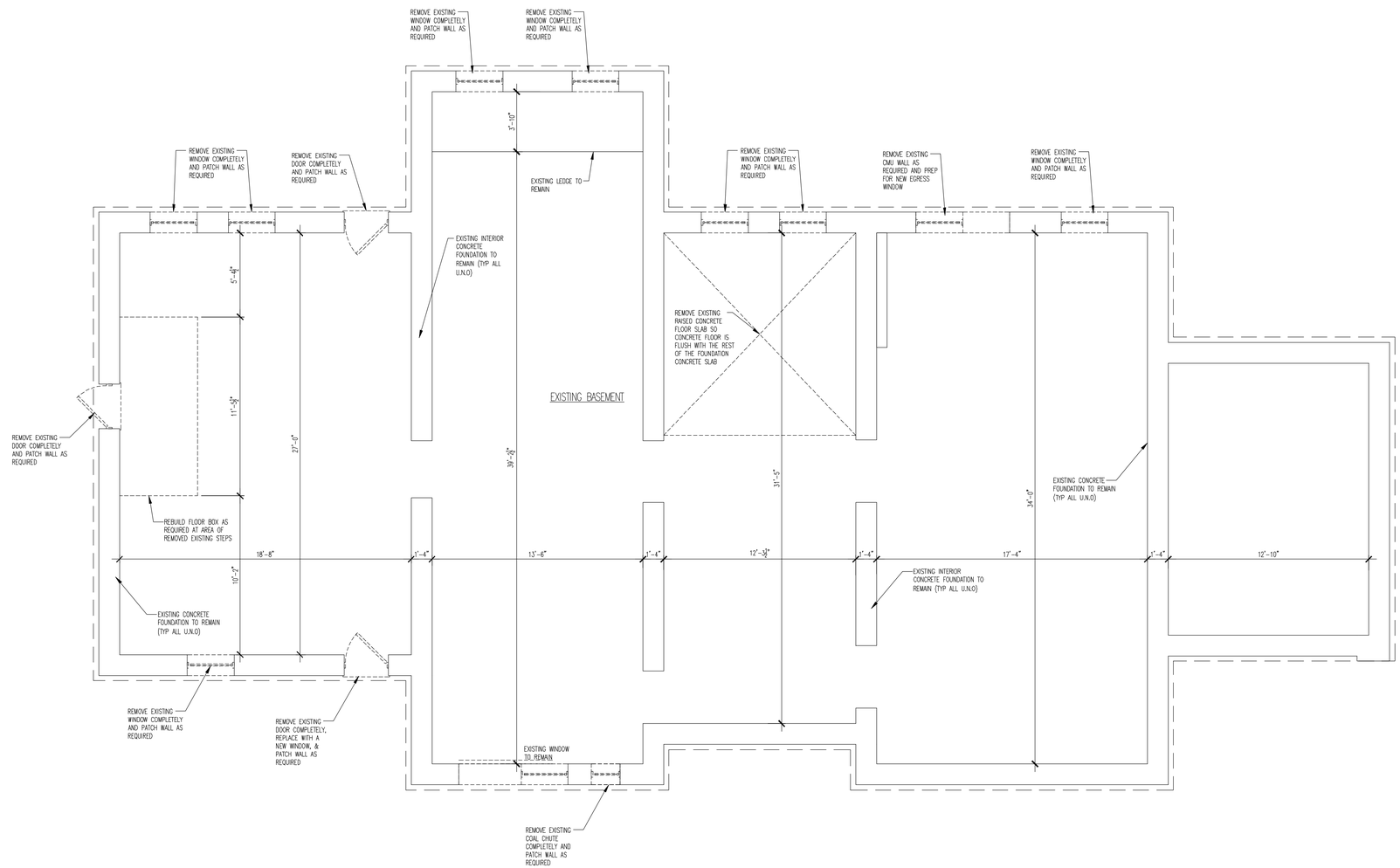

A7 FOUNDATION DEMO PLAN
1/4" = 1'-0"

NORTH

2302016-A2.00.DWG

ARCHITECT
Craftstone Architects, Inc
14150 S. Route 30, Suite 201
Plainfield, Illinois 60544
P: (815) 609-1997 F: (815) 327-8827
www.CraftstoneArchitects.com
Professional Design Firm #: 184-005597

BUILDER
DJK CUSTOM HOMES
2 2 2 E. DINK R P RIVER P

DESIGNER
DJK CUSTOM DESIGN
B=6139=36.86
T=4187691337

LICENSED ARCHITECT
MICHAEL A. BUHR
001-015688
STATE OF ILLINOIS
01-09-2025 | 11-30-2026
DATED | EXPIRES

01-09-2025	7	FOR BLDG DEPT & OWNER COMMENTS 12/16/2024
11-22-2024	1	FOR BLDG DEPT & OWNER COMMENTS 11/07/2024
09-23-2024		PERMIT-BID

Heritage Place Mansion Remodel
126 & 128 N Wright St.
Naperville, IL 60563

Naperville 01/09/2025 PLANNING & ZONING REVIEW Reviewed for Code Compliance

FOUNDATION DEMO PLAN

DRAWN BY: EAO
CHECKED BY: MAB

PROJECT NUMBER: 2302016

SHEET NUMBER: A2.00
OF 19 SHEETS

© 2025 by Craftstone Architects, Inc.

Attached: 2302016_Old_TITLEBLOCK | 2302016_Rev01 | 2302016-Rev01 | 2302016-Notes-1 Floor [x] 1909075-dphoneset(signing) | 1-
Plotted: 01-09-2025 4:24pm (CAD ver 24.0s (LMS Tech))
Plotter: Rev_2020-24.pc3
File Name: 2302016-A2.00.dwg

GENERAL PLAN NOTES:
1. REMOVE ALL EXISTING DOORS & WINDOWS
2. ALL EXISTING MASONRY TO REMAIN AS POSSIBLE
3. REMOVE ALL EXISTING DRYWALL
4. REMOVE ALL EXISTING PLUMBING FIXTURES

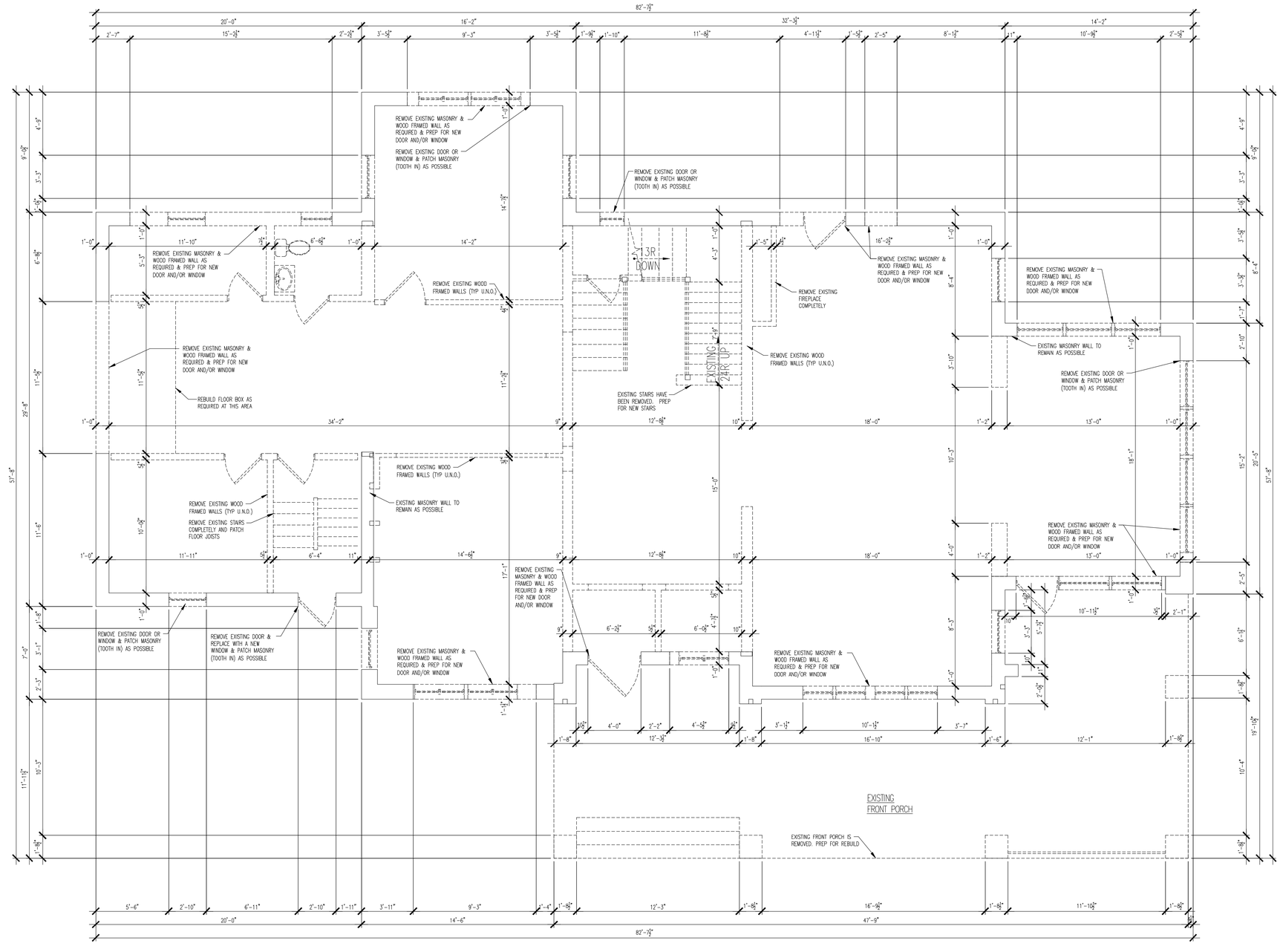

A7 FIRST FLOOR DEMO PLAN
1/4" = 1'-0"

NORTH

ARCHITECT
Craftstone Architects, Inc
14150 S. Route 30, Suite 201
Plainfield, Illinois 60544
P: (815) 609-1997 F: (815) 327-8827
www.CraftstoneArchitects.com
Professional Design Firm #: 184-005597

BUILDER
DJK CUSTOM HOMES
Z Z Z 12 MICK R P RIVER P
B=863.939.3686
T=4187693337

DESIGNER
DJK CUSTOM DESIGN

LICENSED ARCHITECT
MICHAEL A. BUHR
001-015688
STATE OF ILLINOIS
01-09-2025 | 11-30-2026
DATED | EXPIRES

01-09-2025	2	FOR BLDG DEPT & OWNER COMMENTS 12/16/2024
11-22-2024	1	FOR BLDG DEPT & OWNER COMMENTS 11/07/2024
09-23-2024		PERMIT-BID

Heritage Place Mansion Remodel
126 & 128 N Wright St.
Naperville, IL 60563

Naperville
01/20/2025
PROJECT NUMBER
RESIDENTIAL
Reviewed for Code Compliance

FIRST FLOOR DEMO PLAN

DRAWN BY: EAO
CHECKED BY: MAB

PROJECT NUMBER: 2302016

SHEET NUMBER:
A2.01
OF 19 SHEETS

© 2025 by Craftstone Architects, Inc.

2302016-A2.01.DWG

Attached: 2302016-DJK TITLEBLOCK-1 | 2302016-Rev01 | 2302016-Rev-1 | Fear [v1] | 1920079-djkcreeseelsap.pwg | |>
Plotted: 01-09-2025 by Eric Ayala (AOA Ver 24.0) (JAE Tech)
Plotted Rev: 2302016-12-13
Drawing: 2302016-A2.01.dwg

GENERAL PLAN NOTES:
1. REMOVE ALL EXISTING DOORS & WINDOWS
2. ALL EXISTING MASONRY TO REMAIN AS POSSIBLE
3. REMOVE ALL EXISTING DRYWALL
4. REMOVE ALL EXISTING PLUMBING FIXTURES

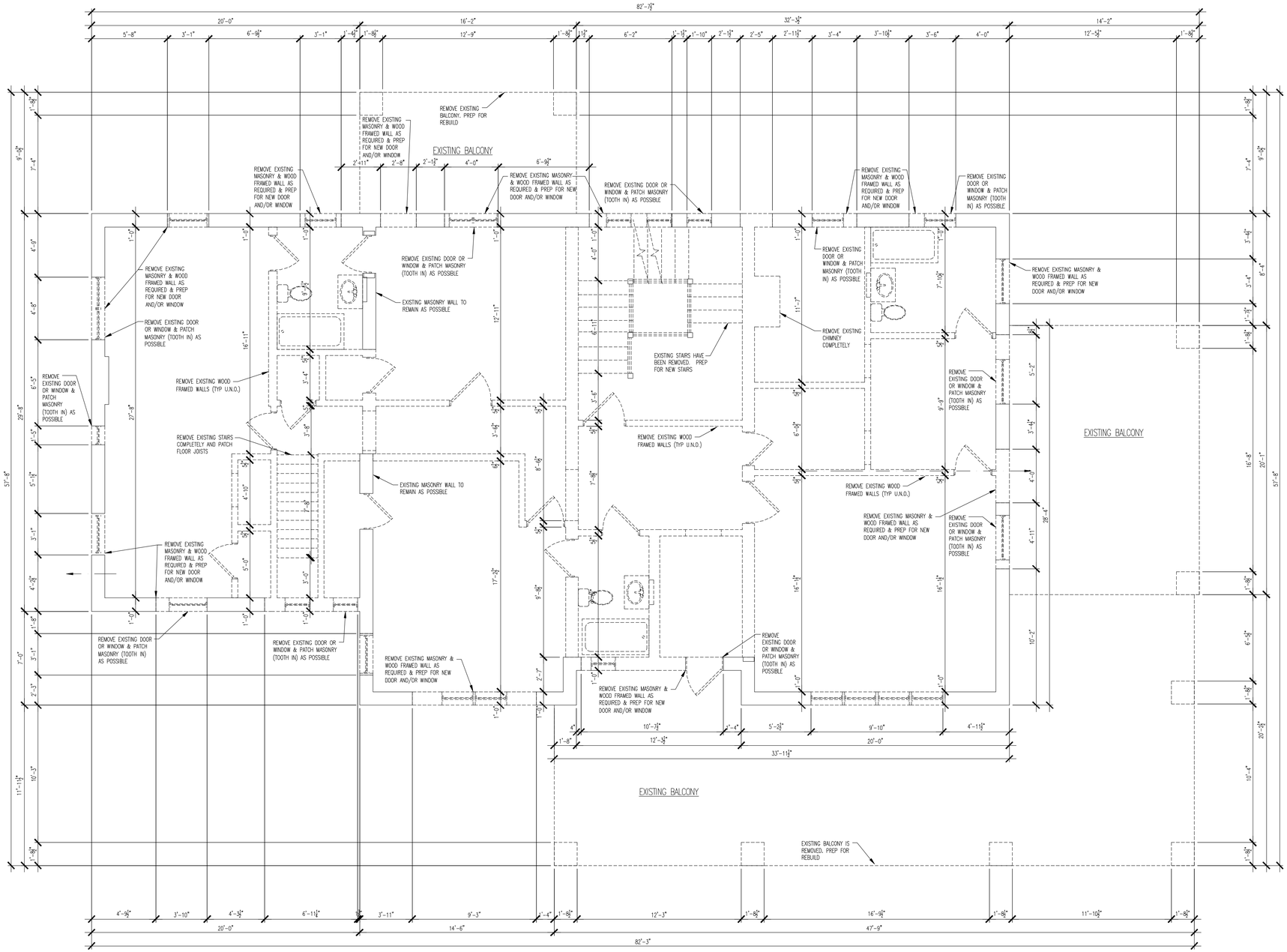

NORTH

A7 SECOND FLOOR DEMO PLAN
1/4" = 1'-0"

ARCHITECT
Craftstone Architects, Inc
14150 S. Route 30, Suite 201
Plainfield, Illinois 60544
P: (815) 609-1997 F: (815) 327-8827
www.CraftstoneArchitects.com
Professional Design Firm #: 184-005597

BUILDER
DJK CUSTOM HOMES
Z. Z. Z. LINNER R. P. RIVER P.

DESIGNER
DJK CUSTOM DESIGN
B=6139.36.86
T=4187913337

LICENSED ARCHITECT
MICHAEL A. BUHR
001-015688
STATE OF ILLINOIS
01-09-2025 | 11-30-2026
DATED | EXPIRES

01-09-2025	2	FOR BLDG DEPT. & OWNER COMMENTS 12/16/2024
11-22-2024	1	FOR BLDG DEPT. & OWNER COMMENTS 11/07/2024
09-23-2024		PERMIT-BID

Heritage Place Mansion Remodel
126 & 128 N Wright St.
Naperville, IL 60563

Naperville 01/20/2025 APPROVED RESIDENTIAL
Reviewed for Code Compliance

SECOND FLOOR DEMO PLAN

DRAWN BY: EAO
CHECKED BY: MAB

PROJECT NUMBER: 2302016

SHEET NUMBER: A2.02
OF 19 SHEETS

© 2025 by Craftstone Architects, Inc.

GENERAL PLAN NOTES:
1. REMOVE ALL EXISTING DOORS & WINDOWS
2. ALL EXISTING MASONRY TO REMAIN AS POSSIBLE
3. REMOVE ALL EXISTING DRYWALL
4. REMOVE ALL EXISTING PLUMBING FIXTURES

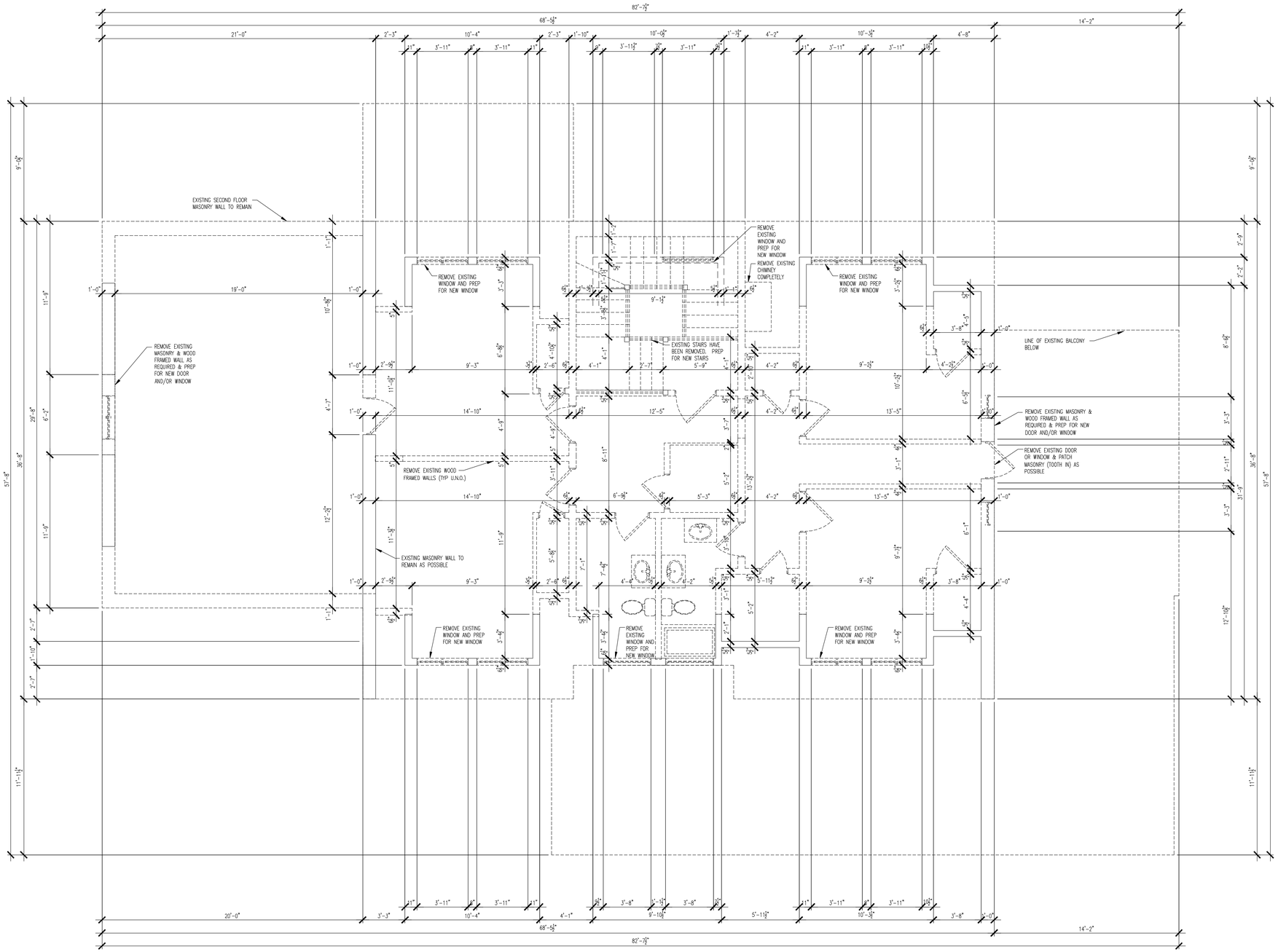

NORTH

A7 ATTIC FLOOR PLAN
1/4" = 1'-0"

ARCHITECT
Craftstone Architects, Inc
14150 S. Route 30, Suite 201
Plainfield, Illinois 60544
P: (815) 609-1997 F: (815) 327-8827
www.CraftstoneArchitects.com
Professional Design Firm #: 184-005597

BUILDER
DJK CUSTOM HOMES
Z Z Z 13 NICKR P RIVER P
T= 14BTD 913 937

DESIGNER
DJK CUSTOM DESIGN
B=863 939 34 846

ISSUED
LICENSED ARCHITECT
MICHAEL A. BUHR
001-015688
STATE OF ILLINOIS
01-09-2025 | 11-30-2026
DATED | EXPIRES

01-09-2025	1	FOR BLDG DEPT & OWNER COMMENTS 12/16/2024
11-22-2024	1	FOR BLDG DEPT & OWNER COMMENTS 11/07/2024
09-23-2024	1	PERMIT-BID

Heritage Place Mansion Remodel
126 & 128 N Wright St.
Naperville, IL 60563

Naperville 1/10/2025 2024 IRC/IEC/IBC/IECC/IMC/IPC/IFC/NEC Reviewed for Code Compliance

ATTIC FLOOR DEMO PLAN

DRAWN BY: EAO
CHECKED BY: MAB

PROJECT NUMBER: 2302016

SHEET NUMBER: A2.03
OF 19 SHEETS

© 2025 by Craftstone Architects, Inc.

2302016-A2.03.DWG
Attached:1 2302016-Exp-TITLEBLOCK v1 | 2302016-Proto1 | 2302016-Base-1 Floor (v-2 190075-dphcmcsetdesign.pwg | >
Plotted: 01-09-2025 4:42pm (AAD Ver 24.0s (LMS Tech))
Plotter: Rev. 2005-01-13
Plot Style: 2002Color.ctb
Layout: A2.03-ATTIC FLOOR PLAN

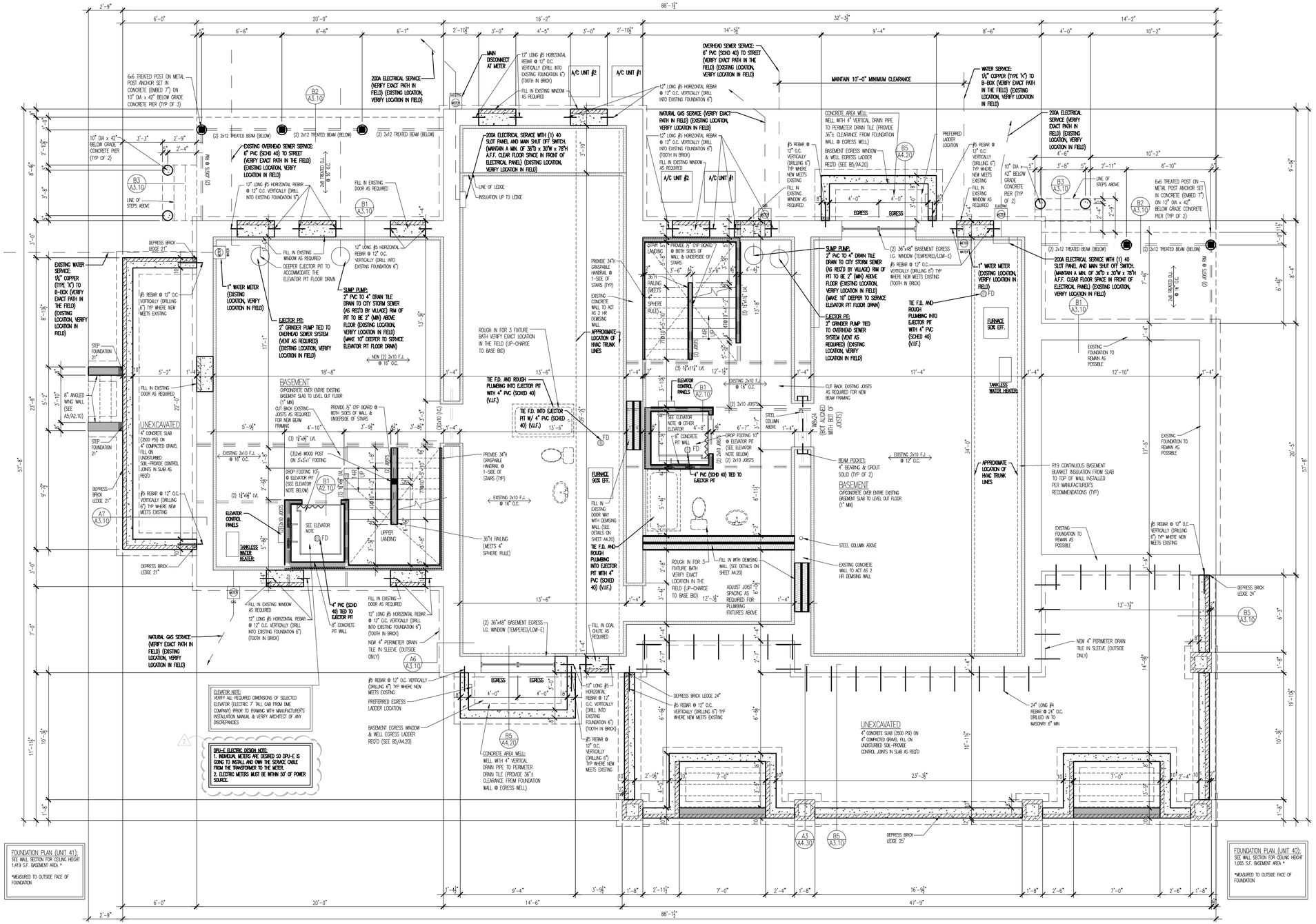

B1 ELEVATOR PIT DETAIL
3/4" = 1'-0"

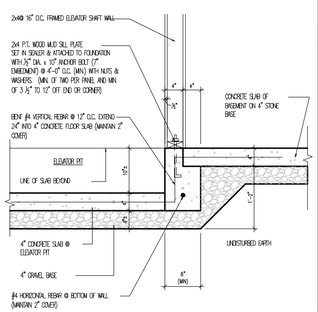

GENERAL FOUNDATION PLAN NOTES:

1. ALL CONTRACTORS TO REFER TO ALL NOTES ON SHEET A0.10 FOR ADDITIONAL INFORMATION.
   - 1.1. SECTION 1 FOR GENERAL REQUIREMENTS
   - 1.2. SECTION 2 & 3 FOR EXCAVATION NOTES AND CONCRETE NOTES
   - 1.3. SECTION 4 FOR MASONRY NOTES
   - 1.4. SECTION 5 FOR STEEL NOTES
   - 1.5. SECTION 6, 7, 8, & 9 FOR CARPENTRY, FIRE BLOCKING, MOISTURE CONTROL & DOOR-WINDOW NOTES.
   - 1.6. SECTION 10, 11, 12 & 13 FOR MECHANICAL, PLUMBING, ELECTRICAL & SMOKE/CO DETECTOR NOTES.
   - 1.7. SECTION 14 FOR IECC NOTES
   - 1.8. SECTION 15, 16 & 17 FOR ATTIC/CRAWL ACCESS, MISCELLANEOUS & FINISH NOTES.
   - 1.9. SECTION 18 FOR NAPERVILLE SPECIFIC NOTES.
2. FOR BASEMENT EGRESS WINDOWS – SEE DETAIL B1/A2.10.
3. PROVIDE PASSIVE RADON SYSTEM – SEE DETAIL A4/A4.20
4. ALL STRUCTURAL STEEL COLUMNS TO BE 3 1/2" DIA. CONCRETE FILLED PIPE COLUMNS WITH STEEL BEARING PLATES TOP AND BOTTOM. TOP PLATES TO BE BOLT CONNECTED TO BEAM ABOVE AND BOTTOM PLATE TO BE "REDHEAD" ANCHORED INTO CONCRETE FOOTING. BASEMENT FLOOR SLAB TO PROVIDE FINAL ANCHORING.

A1 NOTES
NO SCALE

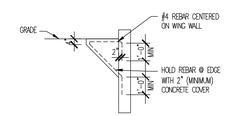

A5 WING WALL DETAIL
N.T.S.

A7 FOUNDATION PLAN
1/4" = 1'-0"

NORTH

ARCHITECT
Craftstone Architects, Inc
14150 S. Route 30, Suite 201
Plainfield, Illinois 60544
P: (815) 609-1997 F: (815) 327-8827
www.CraftstoneArchitects.com
Professional Design Firm #: 184-005597

BUILDER: DJK CUSTOM HOMES
DESIGNER: DJK CUSTOM DESIGN
B-963.939.3686 T-4187613937

LICENSED ARCHITECT
MICHAEL A. BUHR
001-015688
STATE OF ILLINOIS
01-09-2025 DATED | 11-30-2026 EXPIRES

01-09-2025	1	FOR BLDG DEPT & OWNER COMMENTS 12/16/2024
11-22-2024	1	FOR BLDG DEPT & OWNER COMMENTS 11/07/2024
09-23-2024	1	PERMIT-BID

Heritage Place Mansion Remodel
126 & 128 N Wright St.
Naperville, IL 60563

Naperville 11/20/2025 BUILDING & ZONING DIVISION
Reviewed for Code Compliance

FOUNDATION PLAN

DRAWN BY: EAO
CHECKED BY: MAB

PROJECT NUMBER: 2302016

SHEET NUMBER: A2.10
OF 19 SHEETS

© 2025 by Craftstone Architects, Inc.

2302016-A2.10.DWG

Attached: 2302016-Elab-FINDBIDSET(v4) | 2302016-Photo(0) | 2302016-Notes-S-Final | 2302016-Final-Elevator Plt (v-1) 1999715-dijkcustomdesign.png | ▷
Plotted: 01-09-2025 4:24pm (AAD) Ver 24.0a (Lab Tech)
Plotter: Rev. 2005-01-13
File: J:\2302016\CAD\2302016.dwg

GENERAL FOUNDATION PLAN NOTES:

1. ALL CONTRACTORS TO REFER TO ALL NOTES ON SHEET A0.10 FOR ADDITIONAL INFORMATION.
   1.1. SECTION 1 FOR GENERAL REQUIREMENTS
   1.2. SECTION 2 & 3 FOR EXCAVATION NOTES AND CONCRETE NOTES
   1.3. SECTION 4 FOR MASONRY NOTES
   1.4. SECTION 5 FOR STEEL NOTES
   1.5. SECTION 6, 7, 8, & 9 FOR CARPENTRY, FIRE BLOCKING, MOISTURE CONTROL & DOOR-WINDOW NOTES.
   1.6. SECTION 10, 11, 12 & 13 FOR MECHANICAL, PLUMBING, ELECTRICAL & SMOKE/CO DETECTOR NOTES.
   1.7. SECTION 14 FOR ECC NOTES
   1.8. SECTION 15, 16 & 17 FOR ATTIC/CRAWL ACCESS, MISCELLANEOUS & FINISH NOTES.
   1.9. SECTION 18 FOR NAPERVILLE SPECIFIC NOTES.
2. FOR BASEMENT EGRESS WINDOWS – SEE DETAIL B1/A2.10.
3. PROVIDE PASSIVE RADON SYSTEM – SEE DETAIL A4/A4.20
4. ALL STRUCTURAL STEEL COLUMNS TO BE 3 1/2" DIA. CONCRETE FILLED PIPE COLUMNS WITH STEEL BEARING PLATES TOP AND BOTTOM. TOP PLATES TO BE BOLT CONNECTED TO BEAM ABOVE AND BOTTOM PLATE TO BE "REDHEAD" ANCHORED INTO CONCRETE FOOTING. BASEMENT FLOOR SLAB TO PROVIDE FINAL ANCHORING.

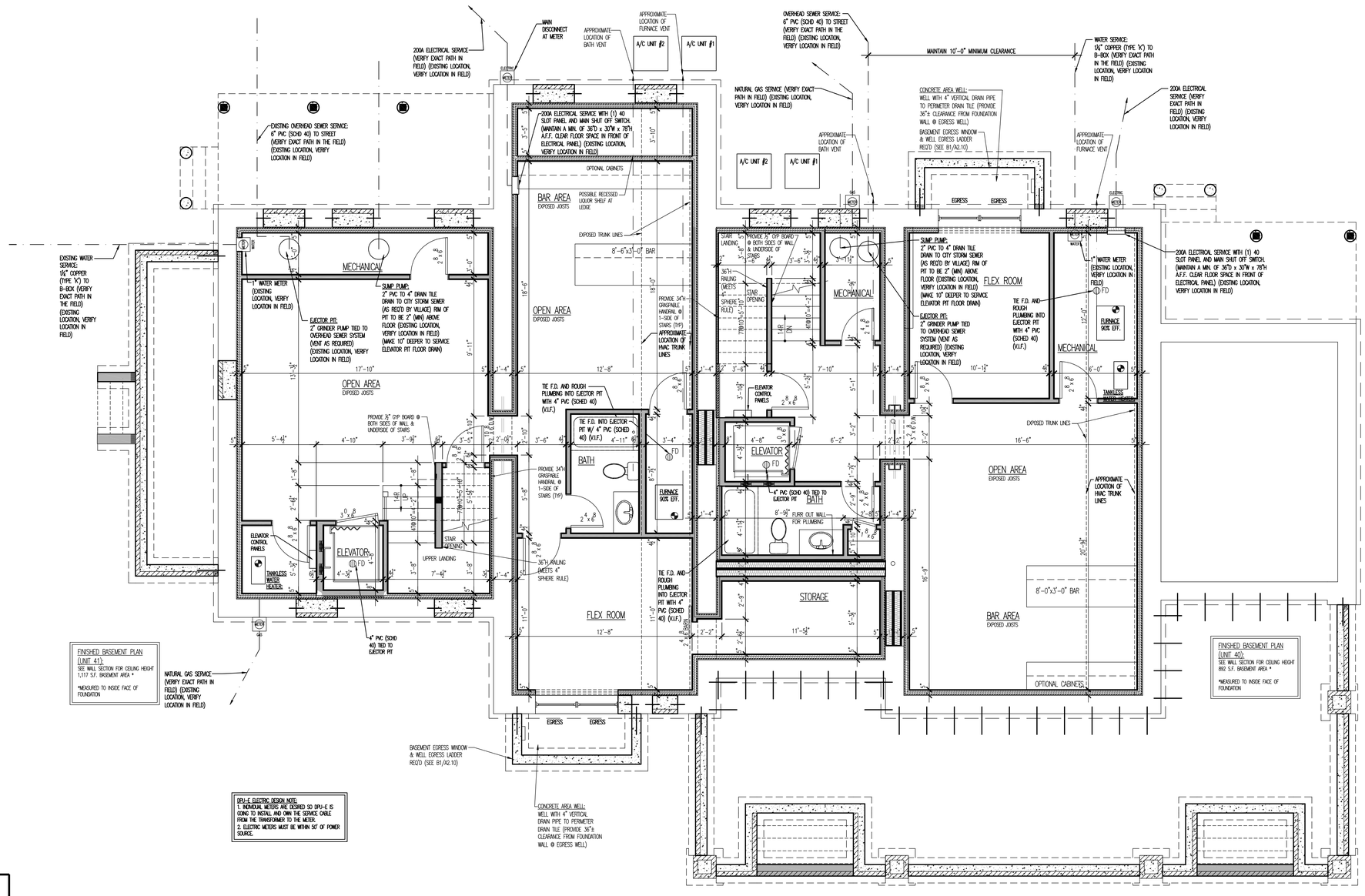

DPU-E ELECTRIC DESIGN NOTE:
1. INDIVIDUAL METERS ARE DESIRED SO DPU-E IS GOING TO INSTALL AND OWN THE SERVICE CABLE FROM THE TRANSFORMER TO THE METER.
2. ELECTRIC METERS MUST BE WITHIN 50' OF POWER SOURCE.

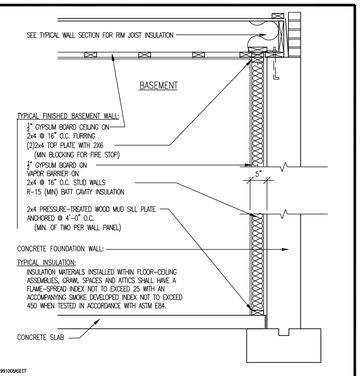

A1 FINISHED BASEMENT
N.T.S.

A7 FINISHED BASEMENT PLAN
1/4" = 1'-0"

NORTH

ARCHITECT
Craftstone Architects, Inc
14150 S. Route 30, Suite 201
Plainfield, Illinois 60544
P: (815) 609-1997 F: (815) 327-8827
www.CraftstoneArchitects.com
Professional Design Firm #: 184-005597

BUILDER
DJK CUSTOM HOMES
Z Z Z LENNER R P RIVER P

DESIGNER
DJK CUSTOM DESIGN
B=(913)305-3646
T=(483)763-3937

LICENSED ARCHITECT
MICHAEL A. BUHR
001-015688
STATE OF ILLINOIS
01-09-2025 | 11-30-2026
DATED | EXPIRES

DATE		
01-09-2025	4	FOR BLDG DEPT & OWNER COMMENTS 12/16/2024
11-22-2024	3	FOR BLDG DEPT & OWNER COMMENTS 11/07/2024
09-23-2024	1	PERMIT-BID

Heritage Place Mansion Remodel
126 & 128 N Wright St.
Naperville, IL 60563

Naperville 01/20/2025 BUILDING DIVISION REVIEWED BY: Reviewed for Code Compliance

FINISHED BASEMENT PLAN

DRAWN BY: EAO
CHECKED BY: MAB

PROJECT NUMBER: 2302016

SHEET NUMBER: A2.15

OF 19 SHEETS

© 2025 by Craftstone Architects, Inc.

2302016-A2.15.DWG

Attached: 2302016-Cab-TITLEBLOCK4 | 2302016-Pad3 | 2302016-Pad2 | 2302016-Notes-O-Fnd | 2302016-Sect-Fn-Bsmt [A-X] | 190907S-6Bdrooms4ba.pwj | ▷
Plotted: 01-09-2025 2:06pm (KAD) ver.14.0s (LMS Tech)
Plotter: Acc 2005-21-1.pc3
Paper: ANSI-D LANDSCAPE (24.00 x 36.00 Inches)
991009SECT

GENERAL PLAN NOTES:
1. REFER TO ALL NOTES ON SHEET A0.10 FOR ADDITIONAL INFORMATION.
   1.1. SECTION 1 FOR GENERAL REQUIREMENTS
   1.2. SECTION 2 & 3 FOR EXCAVATION NOTES AND CONCRETE NOTES
   1.3. SECTION 4 FOR MASONRY NOTES
   1.4. SECTION 5 FOR STEEL NOTES
   1.5. SECTION 6, 7, 8, & 9 FOR CARPENTRY, FIRE BLOCKING, MOISTURE CONTROL & DOOR-WINDOW NOTES
   1.6. SECTION 10, 11, 12 & 13 FOR MECHANICAL, PLUMBING, ELECTRICAL & SMOKE/CO DETECTOR NOTES.
   1.7. SECTION 14 FOR ICCC NOTES
   1.8. SECTION 15, 16 & 17 FOR ATTIC/CRAWL ACCESS, MISCELLANEOUS & FINISH NOTES.
   1.9. SECTION 18 FOR NAPERVILLE SPECIFIC NOTES.
2. SEE GENERAL PLAN NOTES ON FIRST FLOOR SHEET FOR ADDITIONAL INFORMATION.

ADDITIONAL NOTES:
1. EACH EV-CAPABLE SPACE SHALL FEATURE A CONTINUOUS RACEWAY OR CABLE ASSEMBLY INSTALLED BETWEEN AN ENCLOSURE OR OUTLET LOCATED WITHIN 3 FEET OF THE EV-CAPABLE SPACE AND A SUITABLE PANELBOARD OR OTHER ONSITE ELECTRICAL DISTRIBUTION EQUIPMENT. THE ELECTRICAL DISTRIBUTION EQUIPMENT TO WHICH THE RACEWAY OR CABLE ASSEMBLY CONNECTS SHALL HAVE SUFFICIENT DEDICATED SPACE AND SPARE ELECTRICAL CAPACITY FOR A 2-POLE CIRCUIT BREAKER OR SET OF FUSES.
2. INTERIOR LIGHTING CONTROLS: PERMANENTLY INSTALLED LIGHTING FIXTURES SHALL BE CONTROLLED WITH EITHER A DIMMER, AN OCCUPANT SENSOR CONTROL OR OTHER CONTROL THAT IS INSTALLED OR BUILT INTO THE FIXTURE.

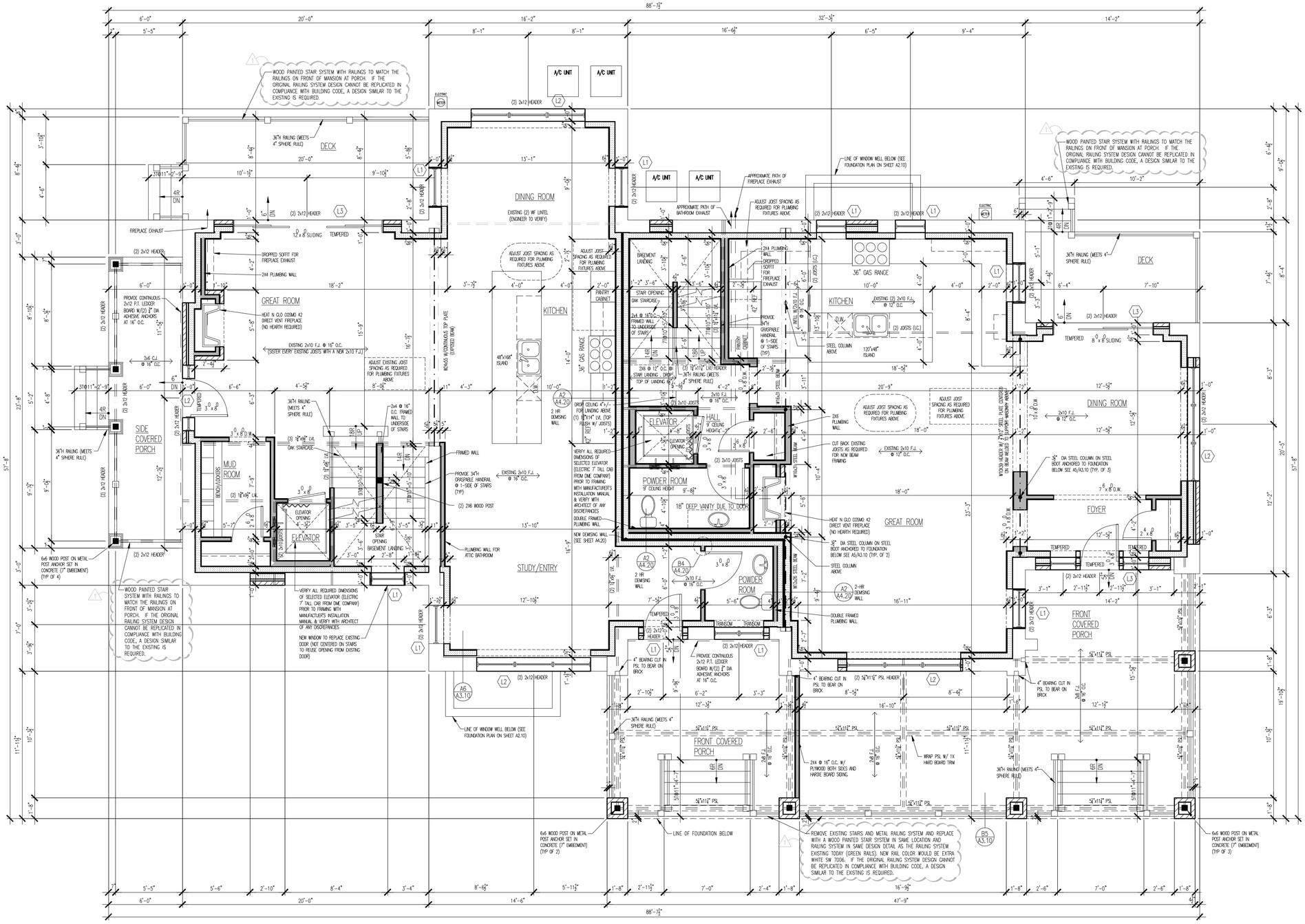

BRICK OR STONE LINTELS		
TAG	SPAN	LINTEL SIZE
L1	–	4" x 4" x 5/16" W/4" BEARING
L2	–	6" x 4" x 3/8" W/6" BEARING
L3	–	8" x 4" x 3/8" BENT PLATE W/3/8" DIA LAG BOLTS TO STRUCTURE @ 48" O.C. IN VERTICAL SLOTS

GENERAL LINTEL NOTES:
1. LONG LEG OF LINTEL SHALL ALWAYS BE RUN VERTICALLY, U.N.O.
2. LINTELS SHALL HAVE A BEARING LENGTH OF 8" MINIMUM.
3. LINTELS SHALL HAVE A SHOP COATED RUST-INHIBITIVE PAINT

LINTEL SCHEDULE 2019-04

FIRST FLOOR PLAN (UNIT 41):
9'-10"± CEILING HEIGHT, U.N.O.
1,425 S.F. HEATED LIVING SPACE
218 S.F. FRONT PORCH AREA
142 S.F. SIDE PORCH AREA
180 S.F. DECK AREA

ADDITIONAL NOTES:
1. ALL NEW WINDOWS TO BE RECESSED BACK 4½" FROM EXTERIOR FACE OF EXISTING BRICK & HAVE A PVC EXTENSION JAMB
2. ALL NEW WINDOWS TO HAVE NEW LINTELS ABOVE FOR EACH BRICK WYTHE (3 ASSUMED).
3. SISTER NEW MATERIAL TO ANY COMPROMISED MATERIAL & REPLACE AS NEEDED.

FIRST FLOOR PLAN (UNIT 40):
9'-10"± CEILING HEIGHT, U.N.O.
1,348 S.F. HEATED LIVING SPACE
495 S.F. FRONT PORCH AREA
116 S.F. DECK AREA

NORTH

A7 FIRST FLOOR PLAN
1/4" = 1'-0"

2302016-A2.20.DWG

ARCHITECT
Craftstone Architects, Inc
14150 S. Route 30, Suite 201
Plainfield, Illinois 60544
P: (815) 609-1997 F: (815) 327-8827
www.CraftstoneArchitects.com
Professional Design Firm #: 184-005597

BUILDER
DJK CUSTOM HOMES
Z Z Z 32 NNCR R P RIVER P

DESIGNER
DJK CUSTOM DESIGN
B=6613.939.3K.R6
T= 4187.6.931.937

LICENSED ARCHITECT
MICHAEL A. BUHR
001-015688
STATE OF ILLINOIS
01-09-2025 | 11-30-2026
DATED | EXPIRES

01-09-2025	1	FOR BLDG DEPT & OWNER COMMENTS 12/16/2024
01-09-2025	2	FOR BLDG DEPT & OWNER COMMENTS 11/07/2024
11-22-2024	1	FOR BLDG DEPT & OWNER COMMENTS
09-23-2024	1	PERMIT-BID

Heritage Place Mansion Remodel
126 & 128 N Wright St.
Naperville, IL 60563

Naperville 01/20/2025 PLANNING & ZONING REVIEW Reviewed for Code Compliance

FIRST FLOOR PLAN

DRAWN BY: EAO
CHECKED BY: MAB

PROJECT NUMBER: 2302016

SHEET NUMBER:
A2.20
OF 19 SHEETS

© 2025 by Craftstone Architects, Inc.

GENERAL PLAN NOTES:

1. REFER TO ALL NOTES ON SHEET A0.10 FOR ADDITIONAL INFORMATION.
   1.1. SECTION 1 FOR GENERAL REQUIREMENTS
   1.2. SECTION 2 & 3 FOR EXCAVATION NOTES AND CONCRETE NOTES
   1.3. SECTION 4 FOR MASONRY NOTES
   1.4. SECTION 5 FOR STEEL NOTES
   1.5. SECTION 6, 7, 8, & 9 FOR CARPENTRY, FIRE BLOCKING, MOISTURE CONTROL & DOOR-WINDOW NOTES.
   1.6. SECTION 10, 11, 12 & 13 FOR MECHANICAL, PLUMBING, ELECTRICAL & SMOKE/CO DETECTOR NOTES.
   1.7. SECTION 14 FOR IECC NOTES
   1.8. SECTION 15, 16 & 17 FOR ATTIC/CRAWL ACCESS, MISCELLANEOUS & FINISH NOTES.
   1.9. SECTION 18 FOR NAPERVILLE SPECIFIC NOTES.
2. SEE GENERAL PLAN NOTES ON FIRST FLOOR SHEET FOR ADDITIONAL INFORMATION.

ADDITIONAL NOTES:

1. EACH EV-CAPABLE SPACE SHALL FEATURE A CONTINUOUS RACEWAY OR CABLE ASSEMBLY INSTALLED BETWEEN AN ENCLOSURE OR OUTLET LOCATED WITHIN 3 FEET OF THE EV-CAPABLE SPACE AND A SUITABLE PANELBOARD OR OTHER ONSITE ELECTRICAL DISTRIBUTION EQUIPMENT. THE ELECTRICAL DISTRIBUTION EQUIPMENT TO WHICH THE RACEWAY OR CABLE ASSEMBLY CONNECTS SHALL HAVE SUFFICIENT DEDICATED SPACE AND SPARE ELECTRICAL CAPACITY FOR A 2-POLE CIRCUIT BREAKER OR SET OF FUSES.
2. INTERIOR LIGHTING CONTROLS: PERMANENTLY INSTALLED LIGHTING FIXTURES SHALL BE CONTROLLED WITH EITHER A DIMMER, AN OCCUPANT SENSOR CONTROL OR OTHER CONTROL THAT IS INSTALLED OR BUILT INTO THE FIXTURE.

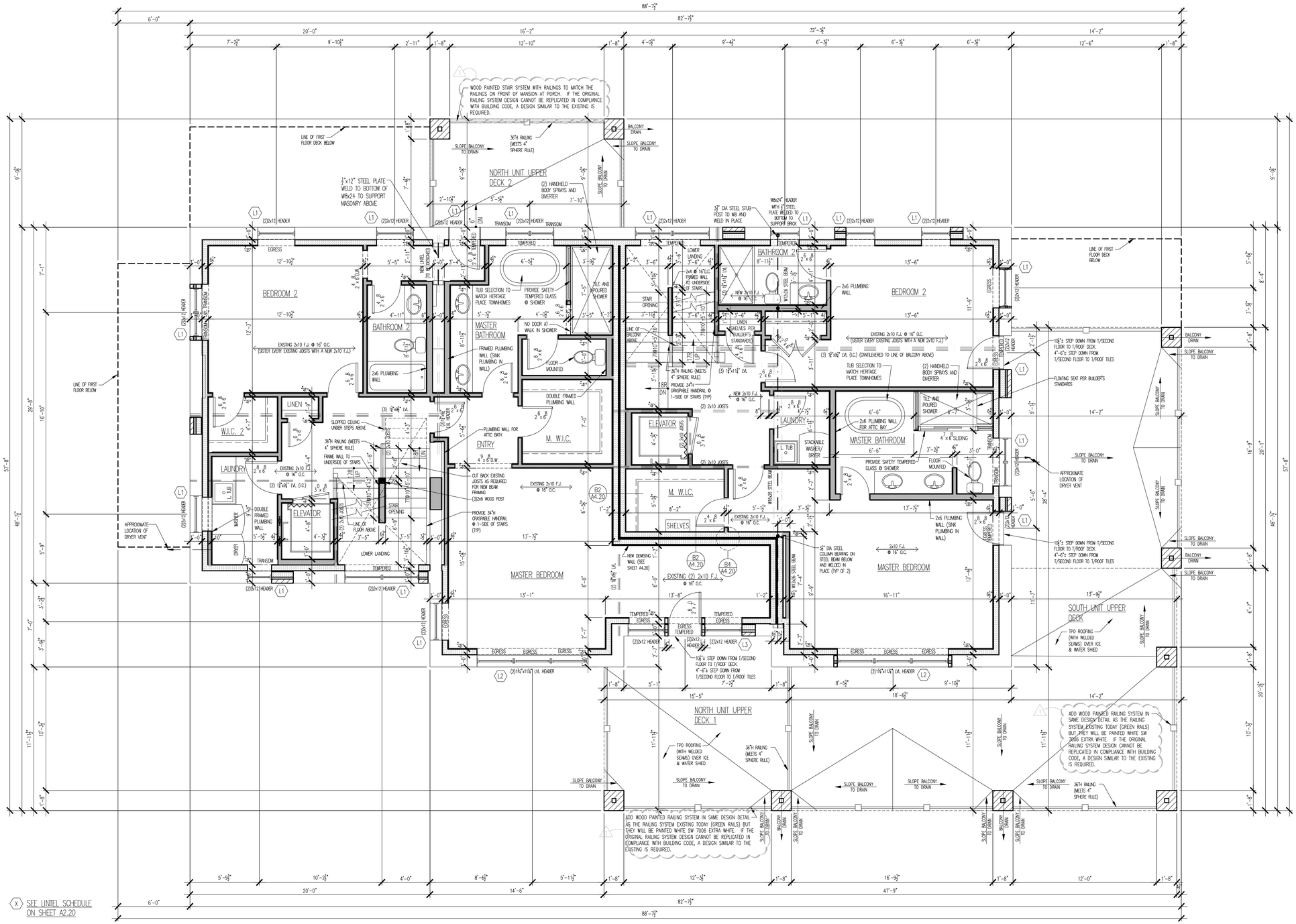

SECOND FLOOR PLAN (UNIT 41):
8'-11"± CEILING HEIGHT, U.N.O.

1,202 S.F. HEATED LIVING SPACE
92 S.F. STAIR AREA
1,294 S.F. TOTAL HEATED LIVING AREA

219 S.F. UPPER DECK 1
146 S.F. UPPER DECK 2

ADDITIONAL NOTES:

1. ALL NEW WINDOWS TO BE RECESSED BACK 4½" FROM EXTERIOR FACE OF EXISTING BRICK & HAVE A PVC EXTENSION JAMB
2. ALL NEW WINDOWS TO HAVE NEW LINTELS ABOVE FOR EACH BRICK WYTHE (3 ASSUMED).
3. SISTER NEW MATERIAL TO ANY COMPROMISED MATERIAL & REPLACE AS NEEDED.

SECOND FLOOR PLAN (UNIT 40):
8'-11"± CEILING HEIGHT, U.N.O.

955 S.F. HEATED LIVING SPACE
108 S.F. STAIR AREA
1,063 S.F. TOTAL HEATED LIVING AREA

772 S.F. UPPER DECK AREA

NORTH

A7 SECOND FLOOR PLAN
1/4" = 1'-0"

ARCHITECT
Craftstone Architects, Inc
14150 S. Route 30, Suite 201
Plainfield, Illinois 60544
P: (815) 609-1997 F: (815) 327-8827
www.CraftstoneArchitects.com
Professional Design Firm #: 184-005597

BUILDER
DJK CUSTOM HOMES
2 2 2 E. LINCOLN R P RIVER P
B=(863)939-3686
T=(483)791-3377

DESIGNER
DJK CUSTOM DESIGN

LICENSED ARCHITECT
MICHAEL A. BUHR
001-015688
STATE OF ILLINOIS
01-09-2025 | 11-30-2026
DATED | EXPIRES

01-09-2025	2	FOR BLDG DEPT & OWNER COMMENTS 12/16/2024
11-22-2024	1	FOR BLDG DEPT & OWNER COMMENTS 11/07/2024
09-23-2024	1	PERMIT-BID

Heritage Place Mansion Remodel

126 & 128 N Wright St.
Naperville, IL 60563

Naperville 01/20/2025 PLANNING & ZONING DIVISION REVIEWED Reviewed for Code Compliance

SECOND FLOOR PLAN

DRAWN BY: EAO
CHECKED BY: MAB

PROJECT NUMBER: 2302016

SHEET NUMBER: A2.30

OF 19 SHEETS

© 2025 by Craftstone Architects, Inc.

GENERAL PLAN NOTES:

1. REFER TO ALL NOTES ON SHEET A0.10 FOR ADDITIONAL INFORMATION.
   - 1.1. SECTION 1 FOR GENERAL REQUIREMENTS
   - 1.2. SECTION 2 & 3 FOR EXCAVATION NOTES AND CONCRETE NOTES
   - 1.3. SECTION 4 FOR MASONRY NOTES
   - 1.4. SECTION 5 FOR STEEL NOTES
   - 1.5. SECTION 6, 7, 8, & 9 FOR CARPENTRY, FIRE BLOCKING, MOISTURE CONTROL & DOOR-WINDOW NOTES
   - 1.6. SECTION 10, 11, 12 & 13 FOR MECHANICAL, PLUMBING, ELECTRICAL & SMOKE/CO DETECTOR NOTES.
   - 1.7. SECTION 14 FOR IECC NOTES
   - 1.8. SECTION 15, 16 & 17 FOR ATTIC/CRAWL ACCESS, MISCELLANEOUS & FINISH NOTES.
   - 1.9. SECTION 18 FOR NAPERVILLE SPECIFIC NOTES.
2. SEE GENERAL PLAN NOTES ON FIRST FLOOR SHEET FOR ADDITIONAL INFORMATION.

ADDITIONAL NOTES:

1. EACH EV-CAPABLE SPACE SHALL FEATURE A CONTINUOUS RACEWAY OR CABLE ASSEMBLY INSTALLED BETWEEN AN ENCLOSURE OR OUTLET LOCATED WITHIN 3 FEET OF THE EV-CAPABLE SPACE AND A SUITABLE PANELBOARD OR OTHER ONSITE ELECTRICAL DISTRIBUTION EQUIPMENT. THE ELECTRICAL DISTRIBUTION EQUIPMENT TO WHICH THE RACEWAY OR CABLE ASSEMBLY CONNECTS SHALL HAVE SUFFICIENT DEDICATED SPACE AND SPARE ELECTRICAL CAPACITY FOR A 2-POLE CIRCUIT BREAKER OR SET OF FUSES.
2. INTERIOR LIGHTING CONTROLS: PERMANENTLY INSTALLED LIGHTING FIXTURES SHALL BE CONTROLLED WITH EITHER A DIMMER, AN OCCUPANT SENSOR CONTROL OR OTHER CONTROL THAT IS INSTALLED OR BUILT INTO THE FIXTURE.

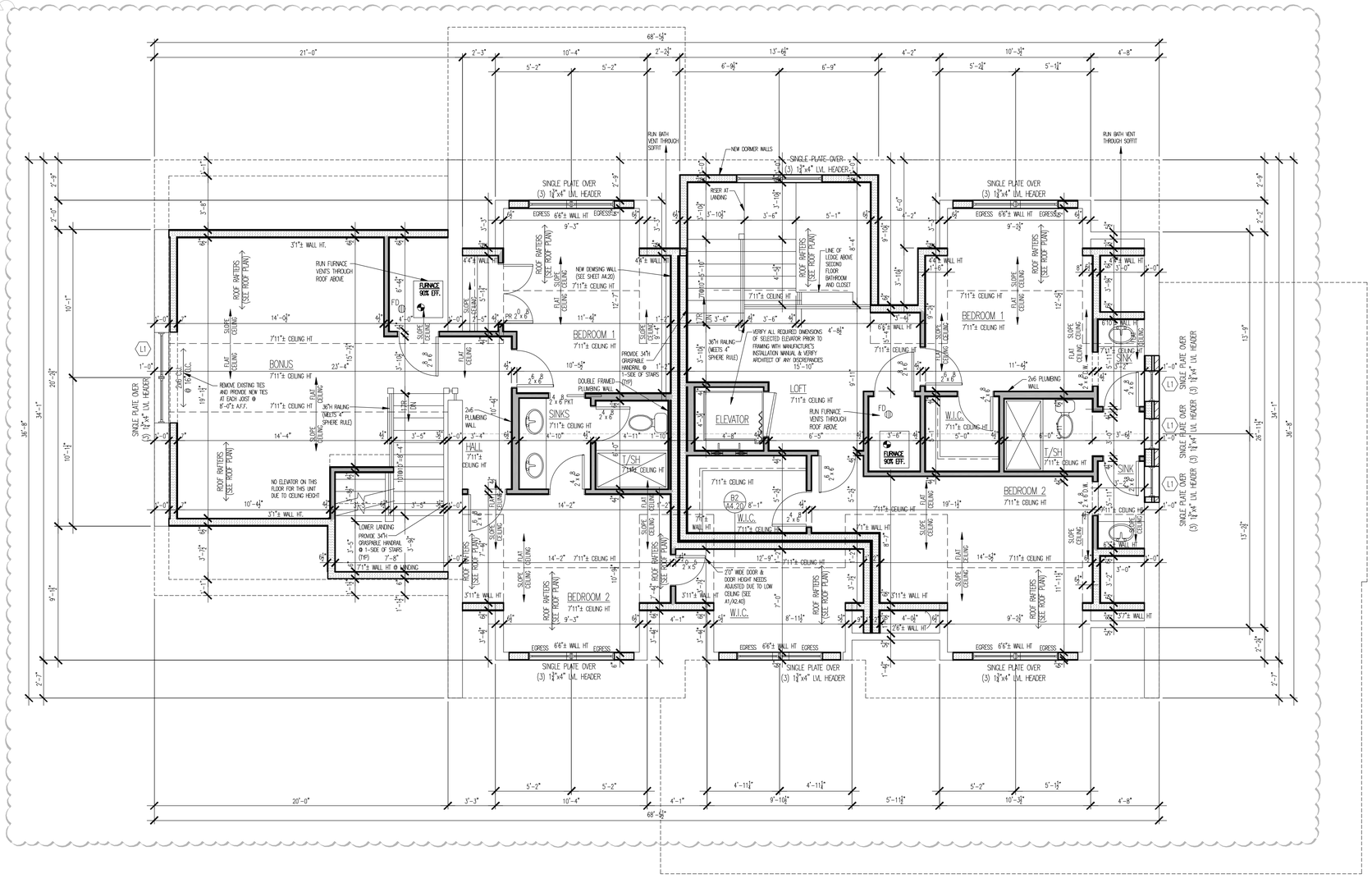

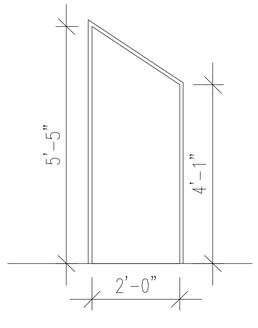

A1 W.I.C. DOOR
NO SCALE

(X) SEE LINTEL SCHEDULE ON SHEET A2.20

ATTIC FLOOR PLAN (UNIT 41):
7'-11"± CEILING HEIGHT, U.N.O.

913 S.F. HEATED LIVING SPACE
85 S.F. STAIR AREA
998 S.F. TOTAL HEATED LIVING AREA

ADDITIONAL NOTES:
1. ALL NEW WINDOWS TO BE RECESSED BACK 4½" FROM EXTERIOR FACE OF EXISTING BRICK & HAVE A PVC EXTENSION JAMB
2. ALL NEW WINDOWS TO HAVE NEW LINTELS ABOVE FOR EACH BRICK WYTHE (3 ASSUMED).
3. SISTER NEW MATERIAL TO ANY COMPROMISED MATERIAL & REPLACE AS NEEDED.

ATTIC FLOOR PLAN (UNIT 40):
7'-11"± CEILING HEIGHT, U.N.O.

758 S.F. HEATED LIVING SPACE
140 S.F. STAIR AREA
898 S.F. TOTAL HEATED LIVING AREA

NORTH

A7 ATTIC FLOOR PLAN
1/4" = 1'-0"

ARCHITECT
Craftstone Architects, Inc
14150 S. Route 30, Suite 201
Plainfield, Illinois 60544
P: (815) 609-1997 F: (815) 327-8827
www.CraftstoneArchitects.com
Professional Design Firm #: 184-005597

BUILDER
DJK CUSTOM HOMES
Z Z Z 33 NNK R P RIVER P
B=963.939.36.86
T= 4187931937

DESIGNER
DJK CUSTOM DESIGN

ISSUED
LICENSED ARCHITECT
MICHAEL A. BUHR
001-015688
STATE OF ILLINOIS
01-09-2025 | 11-30-2026
DATED | EXPIRES

01-09-2025	2	FOR BLDG DEPT & OWNER COMMENTS 12/16/2024
11-22-2024	1	FOR BLDG DEPT & OWNER COMMENTS 11/07/2024
09-23-2024		PERMIT-BID

Heritage Place Mansion Remodel

126 & 128 N Wright St.
Naperville, IL 60563

Naperville 01/20/2025 PROJECT REVIEW RESULTS Reviewed for Code Compliance

ATTIC FLOOR PLAN

DRAWN BY: EAO
CHECKED BY: MAB

PROJECT NUMBER: 2302016

SHEET NUMBER: A2.40

OF 19 SHEETS

© 2025 by Craftstone Architects, Inc.

GENERAL ROOF PLAN NOTES:

1. REFER TO ALL NOTES ON SHEET A0.10 FOR ADDITIONAL INFORMATION.
   - 1.1. SECTION 1 FOR GENERAL REQUIREMENTS
   - 1.2. SECTION 2 & 3 FOR EXCAVATION NOTES AND CONCRETE NOTES
   - 1.3. SECTION 4 FOR MASONRY NOTES
   - 1.4. SECTION 5 FOR STEEL NOTES
   - 1.5. SECTION 6, 7, & 8 FOR CARPENTRY, FIRE BLOCKING, MOISTURE CONTROL & DOOR-WINDOW NOTES.
   - 1.6. SECTION 10, 11, 12 & 13 FOR MECHANICAL, PLUMBING, ELECTRICAL & SMOKE/CO DETECTOR NOTES.
   - 1.7. SECTION 14 FOR IECC NOTES
   - 1.8. SECTION 15, 16 & 17 FOR ATTIC/CRAWL ACCESS, MISCELLANEOUS & FINISH NOTES.
   - 1.9. SECTION 18 FOR NAPERVILLE SPECIFIC NOTES.
2. ICE & WATER SHIELD NOTE: PROVIDE ICE & WATER SHIELD AT EAVES ALL TO POINT THAT IS 24" FROM INSIDE OF HEATED WALL LINE, AT ALL VALLEYS RUN 18" EACH WAY AND AT ALL LOW SLOPED ROOFS (LESS THAN 4:12) AND AT ALL WALL ROOF INTERSECTIONS UNDER FLASHING (RUN 18" EACH WAY)
3. ATTIC VENTILATION NOTE: INSULATION SHALL NOT BLOCK THE FREE FLOW OF AIR FROM THE EAVE INTO THE ATTIC. FOR AIR IMPERMEABLE INSULATIONS IN VENTED ATTICS, A BAFFLE MUST BE INSTALLED BETWEEN EACH RAFTER ALONG THE SIDE AND OVER THE INSULATION
4. FRAMING NOTE: ROOF CONTAINS DIFFERENT SIZE RAFTERS, CONTRACTOR CAN ADJUST BEARING HEIGHT BY ADDED WOOD PLATES OR INCREASING RAFTER HEEL CUT OR COMBINATION OF BOTH TO KEEP EAVE FACE IN LINE. CONTRACTOR HAS OPTION TO UPSIZE ALL RAFTERS TO THE SAME SIZE
5. PURLIN NOTE: PURLIN SHALL MATCH ROOF RAFTER SIZE IT SUPPORTS & SHALL BE CONTINOUS AND SUPPORTED BY 2x4@45° OC BRACES ANGLED DOWN NO LESS THAN 45° FROM HORIZONTAL TO BEARING WALLS. PROVIDE 2x6 HORIZONTAL BRACING ON 2x4@8'-0" OC MAX. SEE PURLIN DETAIL THIS SHEET.
6. SIMPSON H2.5 HURRICANE TIE-DOWNS AT 48" O.C. MIN TO BE PROVIDED PER IRC. H2.5 CLIPS TO BE PROVIDED AT ALL CATHEDRAL RAFTERS, TRAY CEILING RAFTERS, BARREL VAULT RAFTERS, AS WELL AS ANY RAFTERS ATTACHED WITH LOOKOUTS.
7. PROVIDE FLASHING AT ALL WALL AND ROOF INTERSECTIONS WHEREVER THERE IS A CHANGE IN ROOF SLOPE OR DIRECTION AND AROUND ROOF OPENINGS.
8. ROOF VENTS TO BE LOCATED ON BACK SLOPE OF ROOF. NUMBER AND LOCATIONS SHALL BE BASED ON 1/300 TOTAL AREA OF VENTS PER IRC.

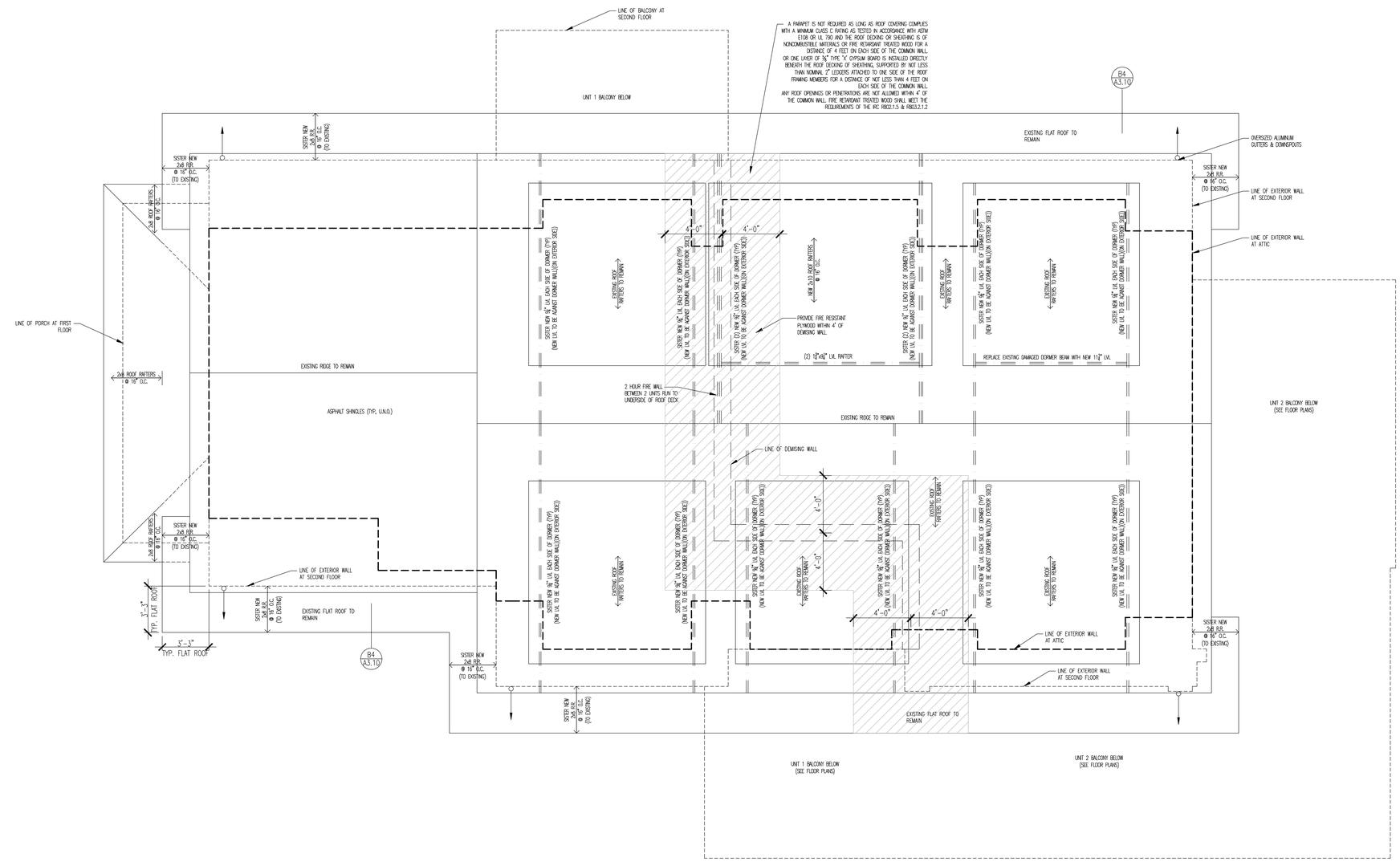

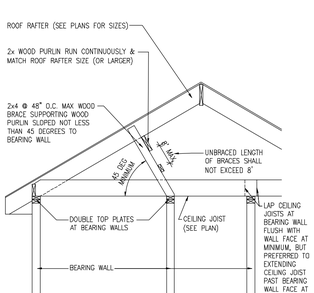

C1 PURLIN DETAIL
N.T.S.

A7 ROOF PLAN
1/4" = 1'-0"

NORTH

ARCHITECT
Craftstone Architects, Inc
14150 S. Route 30, Suite 201
Plainfield, Illinois 60544
P: (815) 609-1997 F: (815) 327-8827
www.CraftstoneArchitects.com
Professional Design Firm #: 184-005597

BUILDER
DJK CUSTOM HOMES

DESIGNER
DJK CUSTOM DESIGN
B=(630)369-3686
T=(480)691-9337

STATE OF ILLINOIS LICENSED ARCHITECT
MICHAEL A. BUHR
001-015688
01-09-2025 | 11-30-2026
DATED | EXPIRES

01-09-2025	FOR BLDG DEPT & OWNER COMMENTS 12/16/2024
11-22-2024	FOR BLDG DEPT & OWNER COMMENTS 11/07/2024
09-23-2024	PERMIT-BID

Heritage Place Mansion Remodel

126 & 128 N Wright St.
Naperville, IL 60563

Naperville 11/20/2025 Permit # 24-0832-Alt Reviewed for Code Compliance

ROOF PLAN

DRAWN BY: EAO
CHECKED BY: MAB

PROJECT NUMBER: 2302016

SHEET NUMBER: A2.50
OF SHEETS

© 2025 by Craftstone Architects, Inc.

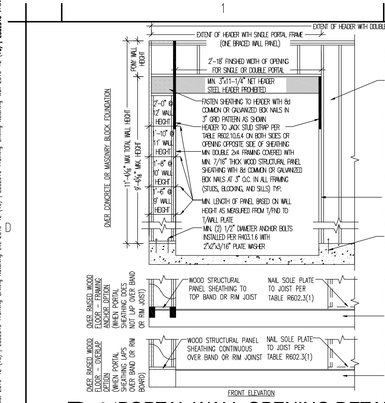

D1 PORTAL WALL OPENING DETAIL
NO SCALE (48)

FRAMING-WATTOW WALL PORTAL OPENING 2019-12 (48)

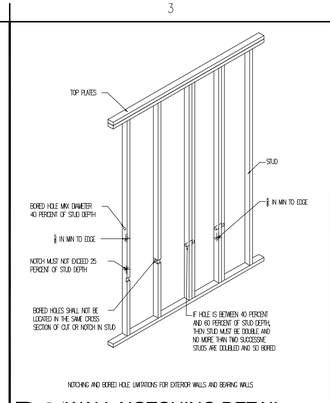

D3 WALL NOTCHING DETAIL
NO SCALE (16)

Framing-Drilling, Notching-Wall 2019-12 (48)

JOIST SIZE	MAX DRILLED HOLE	MAX NOTCH DEPTH	MAX END NOTCH
2x4	NONE	NONE	NONE
2x6	1 1/2"	1 1/2"	2 1/2"
2x8	2 1/2"	2 1/2"	3 1/2"
2x10	3"	3"	4 1/2"
2x12	4 1/2"	4 1/2"	5 1/2"

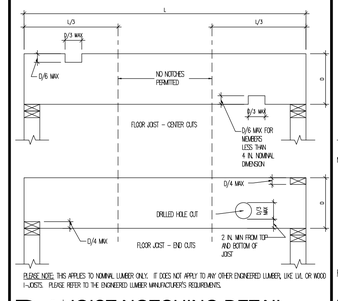

PLEASE NOTE: THIS APPLIES TO NOMINAL LUMBER ONLY. IT DOES NOT APPLY TO ANY OTHER ENGINEERED LUMBER, LIKE LVL OR WOOD I-JOISTS. PLEASE REFER TO THE ENGINEERED LUMBER MANUFACTURER'S REQUIREMENTS.

D4 JOIST NOTCHING DETAIL
NO SCALE (16)

Framing-Drilling, Notching-Joist 2019-12 (48)

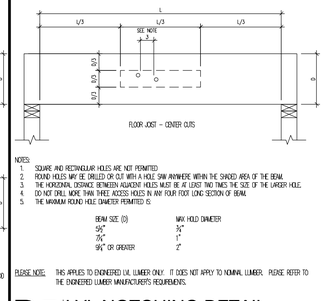

NOTES:
1. SQUARE AND RECTANGULAR HOLES ARE NOT PERMITTED
2. ROUND HOLES MAY BE DRILLED OR CUT WITH A HOLE SAW ANYWHERE WITHIN THE SHADED AREA OF THE BEAM.
3. THE HORIZONTAL DISTANCE BETWEEN ADJACENT HOLES MUST BE AT LEAST TWO TIMES THE SIZE OF THE LARGER HOLE.
4. DO NOT DRILL MORE THAN THREE ADDITIONAL HOLES IN ANY FOUR FOOT LONG SECTION OF BEAM.
5. THE MAXIMUM ROUND HOLE DIAMETER PERMITTED IS:

BEAM SIZE (D)	MAX HOLD DIAMETER
5¼"	¾"
7¼"	1"
9¼" OR GREATER	2"

PLEASE NOTE: THIS APPLIES TO ENGINEERED LVL LUMBER ONLY. IT DOES NOT APPLY TO NOMINAL LUMBER. PLEASE REFER TO THE ENGINEERED LUMBER MANUFACTURER'S REQUIREMENTS.

D5 LVL NOTCHING DETAIL
NO SCALE (16)

Framing-Drilling, Notching-LVL 2019-12 (48)

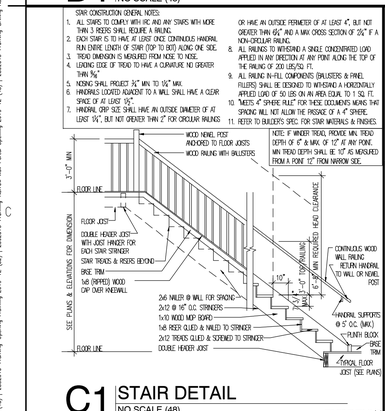

C1 STAIR DETAIL
NO SCALE (48)

STAIR 2018 IRC 2019-12 (48)

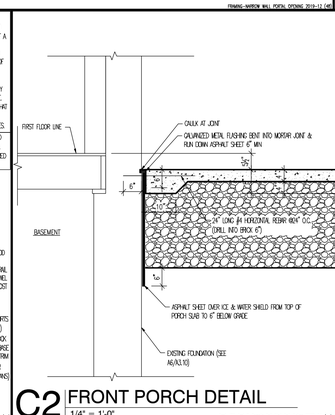

C2 FRONT PORCH DETAIL
1/4" = 1'-0"

Sect-2Sl_Fnd_B_Cnpyle 2x6_Wall 2x4_Siding 2020-01 (10)

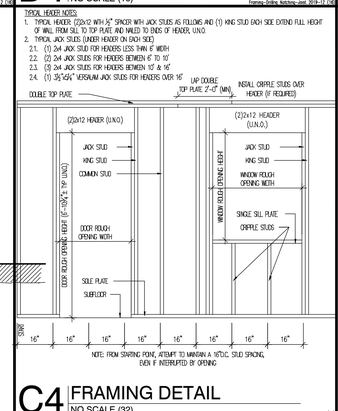

C4 FRAMING DETAIL
NO SCALE (32)

FRAMING-OPEN FRAMING 2019-12 (32)

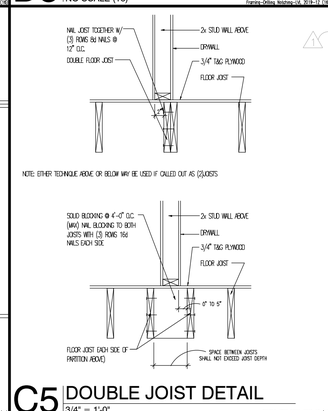

C5 DOUBLE JOIST DETAIL
3/4" = 1'-0"

DOUBLE JOIST DETAIL 2019-12 (48)

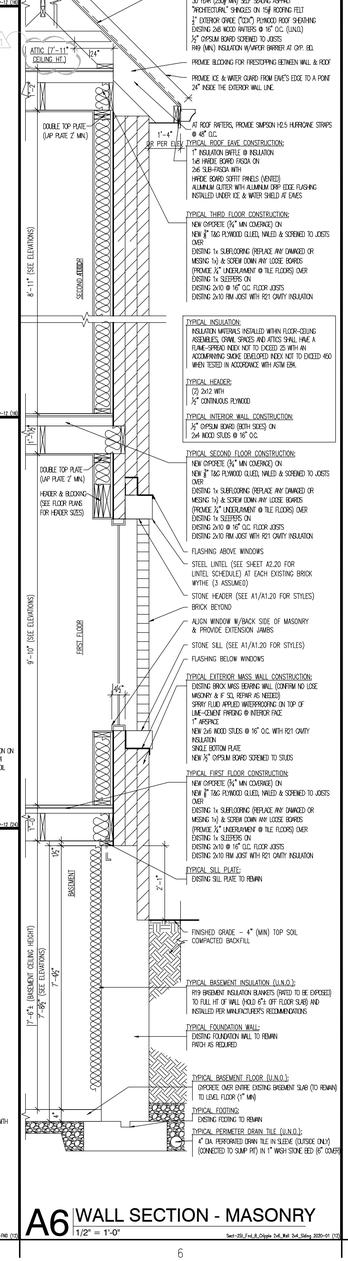

A6 WALL SECTION - MASONRY
1/2" = 1'-0"

Sect-2Sl_Fnd_B_Cnpyle 2x6_Wall 2x4_Siding 2020-01 (10)

TYPICAL FLASHING & WEEP HOLE REQUIREMENTS:
PROVIDE CONTINUOUS CORROSION-RESISTIVE FLASHING AT TOP OF ALL EXTERIOR WINDOWS, DOOR, AND OTHER OPENINGS, AT THE INTERSECTION OF CHIMNEYS OR OTHER MASONRY CONSTRUCTION WITH FRAME WALLS, UNDER AND AT ENDS OF MASONRY, WOOD, OR METAL COPINGS AND SILLS, CONTINUOUSLY ABOVE ALL PROJECTING WOOD TRIM, WHERE PORCHES, DECKS, OR STAIRS ATTACH TO A WALL OR FLOOR ASSEMBLY OF WOOD-FRAME CONSTRUCTION, AT WALL AND ROOF INTERSECTIONS. WEEP HOLES ARE TO BE PROVIDED DIRECTLY ABOVE FLASHING WITH A MIN DIAMETER OF 3/16" AND SPACED @ A MAXIMUM OF 33" O.C. WITH COTTON ROPE WICK RUN UP THE WALL 12" MIN, THROUGH WEEP HOLE, EXTENDED PAST THE FACE OF THE MASONRY AND EXPOSED TO EXTERIOR.

TYPICAL ROOF CONSTRUCTION:
EXISTING 2x10 HIP/RIDGE RAFTER (BLOCK RAFTERS SOLID WITH 2x)
2x4 COLLAR TIES @ 48" O.C.
30 YEAR (250# MIN) SELF SEALING ASPHALT "PROFECTURAL" SHINGLES ON 15# ROOFING FELT
¾" EXTERIOR GRADE (TCOV) PLYWOOD ROOF SHEATHING
EXISTING 2x8 WOOD RAFTERS @ 16" O.C. (LVNO)
½" GYPSUM BOARD SCREWED TO JOISTS
R49 (MIN.) INSULATION W/VAPOR BARRIER AT CVP. BD.
PROVIDE BLOCKING FOR FIRESTOPPING BETWEEN WALL & ROOF
PROVIDE ICE & WATER GUARD FROM EAVE'S EDGE TO A POINT 24" INSIDE THE EXTERIOR WALL LINE.
AT ROOF RAFTERS, PROVIDE SIMPSON H2.5 HURRICANE STRAPS @ 48" O.C.

TYPICAL ROOF EAVE CONSTRUCTION:
1" INSULATION BATTS @ INSULATION
1x6 HARDIE BOARD FASCIA ON
2x6 SUB-FASCIA WITH
HARDIE BOARD SOFFIT PANELS (VENTED)
ALUMINUM GUTTER WITH ALUMINUM DRIP EDGE FLASHING INSTALLED UNDER ICE & WATER SHIELD AT EAVES

TYPICAL THIRD FLOOR CONSTRUCTION:
NEW OVERDECK (¾" MIN COVERAGE) ON
NEW ¾" T&G PLYWOOD GLUED, NAILED & SCREWED TO JOISTS OVER
EXISTING 1x SUBFLOORING (REPLACE ANY DAMAGED OR MISSING 1x) & SCREW DOWN ANY LOOSE BOARDS
(PROVIDE ¼" UNDERLAYMENT @ TILE FLOORS) OVER
EXISTING 1x SLEEPERS ON
EXISTING 2x10 @ 16" O.C. FLOOR JOISTS
EXISTING 2x10 RIM JOIST WITH R21 CAVITY INSULATION

TYPICAL INSULATION:
INSULATION MATERIALS INSTALLED WITHIN FLOOR-CEILING ASSEMBLIES, SIMILAR SPACES AND ATTICS SHALL HAVE A FLAME-SPREAD INDEX NOT TO EXCEED 25 WITH AN ACCOMPANYING SMOKE DEVELOPED INDEX NOT TO EXCEED 450 WHEN TESTED IN ACCORDANCE WITH ASTM E84.

TYPICAL HEADER:
(2) 2x12 WITH
½" CONTINUOUS PLYWOOD

TYPICAL INTERIOR WALL CONSTRUCTION:
½" GYPSUM BOARD (BOTH SIDES) ON
2x4 WOOD STUDS @ 16" OC.

TYPICAL SECOND FLOOR CONSTRUCTION:
NEW OVERDECK (¾" MIN COVERAGE) ON
NEW ¾" T&G PLYWOOD GLUED, NAILED & SCREWED TO JOISTS OVER
EXISTING 1x SUBFLOORING (REPLACE ANY DAMAGED OR MISSING 1x) & SCREW DOWN ANY LOOSE BOARDS
(PROVIDE ¼" UNDERLAYMENT @ TILE FLOORS) OVER
EXISTING 1x SLEEPERS ON
EXISTING 2x10 @ 16" O.C. FLOOR JOISTS
EXISTING 2x10 RIM JOIST WITH R21 CAVITY INSULATION

FLASHING ABOVE WINDOWS
STEEL LINTEL (SEE SHEET A2.20 FOR LINTEL SCHEDULE) AT EACH EXISTING BRICK WYTHE (3 ASSUMED)
STONE HEADER (SEE A1/A1.20 FOR STYLES)
BRICK BEYOND
ALIGN WINDOW W/BACK SIDE OF MASONRY & PROVIDE EXTENSION JAMBS
STONE SILL (SEE A1/A1.20 FOR STYLES)
FLASHING BELOW WINDOWS

TYPICAL EXTERIOR MASS WALL CONSTRUCTION:
EXISTING BRICK MASS BEARING WALL (CONFIRM NO LOSE MASONRY & 1" SILL REPAIR AS NEEDED)
SPRAY FLUID APPLIED WATERPROOFING ON TOP OF LIME-CEMENT PARGING @ INTERIOR FACE
1" AIRSPACE
NEW 2x6 WOOD STUDS @ 16" O.C. WITH R21 CAVITY INSULATION
SINGLE BOTTOM PLATE
NEW ½" GYPSUM BOARD SCREWED TO STUDS

TYPICAL FIRST FLOOR CONSTRUCTION:
NEW OVERDECK (¾" MIN COVERAGE) ON
NEW ¾" T&G PLYWOOD GLUED, NAILED & SCREWED TO JOISTS OVER
EXISTING 1x SUBFLOORING (REPLACE ANY DAMAGED OR MISSING 1x) & SCREW DOWN ANY LOOSE BOARDS
(PROVIDE ¼" UNDERLAYMENT @ TILE FLOORS) OVER
EXISTING 1x SLEEPERS ON
EXISTING 2x10 @ 16" O.C. FLOOR JOISTS
EXISTING 2x10 RIM JOIST WITH R21 CAVITY INSULATION

TYPICAL SILL PLATE:
EXISTING SILL PLATE TO REMAIN

FINISHED GRADE – 4" (MIN) TOP SOIL COMPACTED BACKFILL

TYPICAL BASEMENT INSULATION (U.N.O.):
R19 BASEMENT INSULATION BLANKETS (FASTED TO BE EXPOSED) TO FULL HT OF WALL (HOLD 6"± OFF FLOOR SLAB) AND INSTALLED PER MANUFACTURER'S RECOMMENDATIONS

TYPICAL FOUNDATION WALL:
EXISTING FOUNDATION WALL TO REMAIN PATCH AS REQUIRED

TYPICAL BASEMENT FLOOR (U.N.O.):
CONCRETE OVER ENTIRE EXISTING BASEMENT SLAB TO REMAIN TO LEVEL FLOOR (1" MIN)

TYPICAL FOOTING:
EXISTING FOOTING TO REMAIN

TYPICAL PERIMETER DRAIN TILE (U.N.O.):
4" DIA. PERFORATED DRAIN TILE IN FILTER SOCK ONLY (CONNECTED TO SUMP PIT) IN 1" WASH STONE BED (6" COVER)

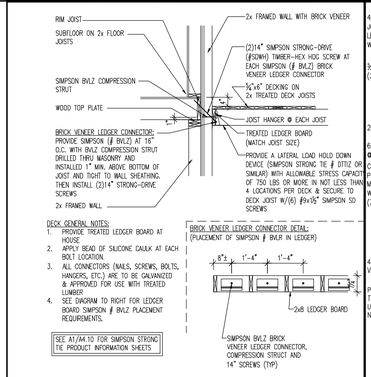

B1 DECK LEDGER DETAIL
3/8" = 1'-0"

DECK-STEP DOWN_2013 (10)

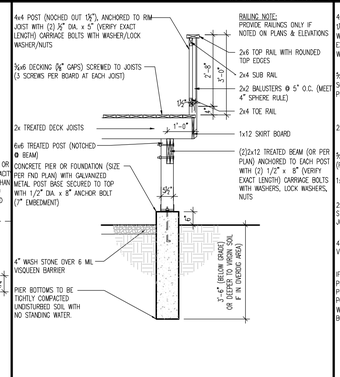

B2 DECK BEAM DETAIL
3/8" = 1'-0"

DECK-STEP DOWN_2013 (10)

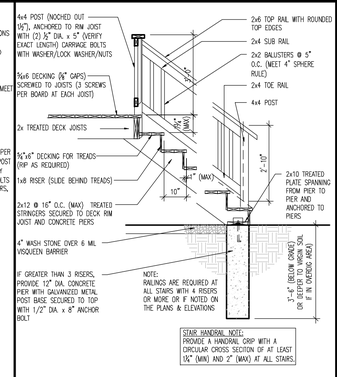

B3 DECK STAIR DETAIL
3/8" = 1'-0"

DECK-STEP DOWN_2013 (10)

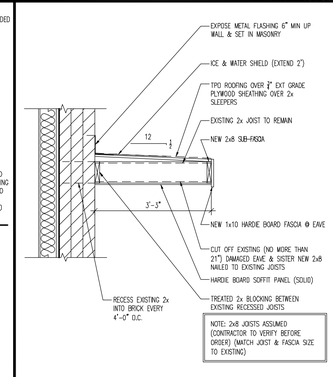

B4 EXISTING CANOPY DETAIL
1/2" = 1'-0"

Fnck Section 2019-12 (04)

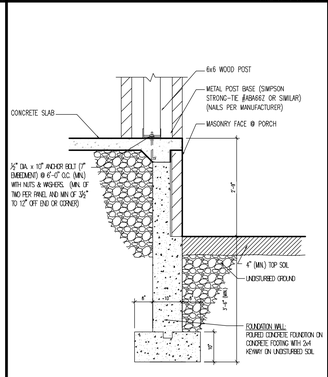

B5 PORCH SECTION
1/2" = 1'-0"

Fnck Section 2019-12 (04)

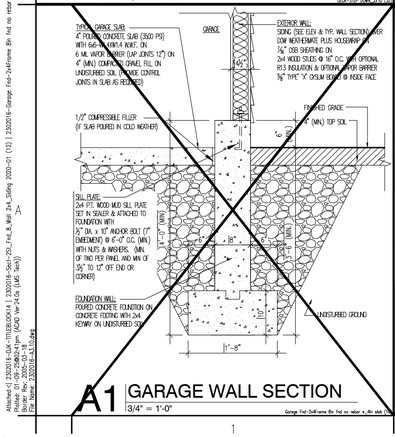

A1 GARAGE WALL SECTION
3/4" = 1'-0"

Garage Fnd-2xWframe Bm Fnd no rebar w_4in slab (4)

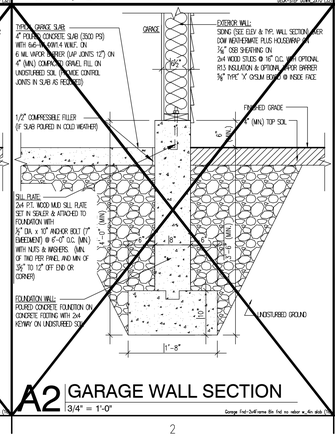

A2 GARAGE WALL SECTION
3/4" = 1'-0"

Garage Fnd-2xWframe Bm Fnd no rebar w_4in slab (4)

GENERAL PLAN NOTES:

1. REFER TO ALL NOTES ON SHEET A0.10 FOR ADDITIONAL INFORMATION.
   - 1.1. SECTION 1 FOR GENERAL REQUIREMENTS
   - 1.2. SECTION 2 & 3 FOR EXCAVATION NOTES AND CONCRETE NOTES
   - 1.3. SECTION 4 FOR MASONRY NOTES
   - 1.4. SECTION 5 FOR STEEL NOTES
   - 1.5. SECTION 6, 7, 8, & 9 FOR CARPENTRY, FIRE BLOCKING, MOISTURE CONTROL & DOOR-WINDOW NOTES.
   - 1.6. SECTION 10, 11, 12 & 13 FOR MECHANICAL, PLUMBING, ELECTRICAL & SMOKE/CO DETECTOR NOTES.
   - 1.7. SECTION 14 FOR IECC NOTES
   - 1.8. SECTION 15, 16 & 17 FOR ATTIC/CRAWL ACCESS, MISCELLANEOUS & FINISH NOTES.
   - 1.9. SECTION 18 FOR NAPERVILLE SPECIFIC NOTES.
2. SEE GENERAL PLAN NOTES ON FIRST FLOOR SHEET FOR ADDITIONAL INFORMATION.

ADDITIONAL NOTES:

1. EACH EV-CAPABLE SPACE SHALL FEATURE A CONTINUOUS RACEWAY OR CABLE ASSEMBLY INSTALLED BETWEEN AN ENCLOSURE OR OUTLET LOCATED WITHIN 3 FEET OF THE EV-CAPABLE SPACE AND A SUITABLE PANELBOARD OR OTHER ONSITE ELECTRICAL DISTRIBUTION EQUIPMENT. THE ELECTRICAL DISTRIBUTION EQUIPMENT TO WHICH THE RACEWAY OR CABLE ASSEMBLY CONNECTS SHALL HAVE SUFFICIENT DEDICATED SPACE AND SPARE ELECTRICAL CAPACITY FOR A 2-POLE CIRCUIT BREAKER OR SET OF FUSES.
2. INTERIOR LIGHTING CONTROLS: PERMANENTLY INSTALLED LIGHTING FIXTURES SHALL BE CONTROLLED WITH EITHER A DIMMER, AN OCCUPANT SENSOR CONTROL OR OTHER CONTROL THAT IS INSTALLED OR BUILT INTO THE FIXTURE.

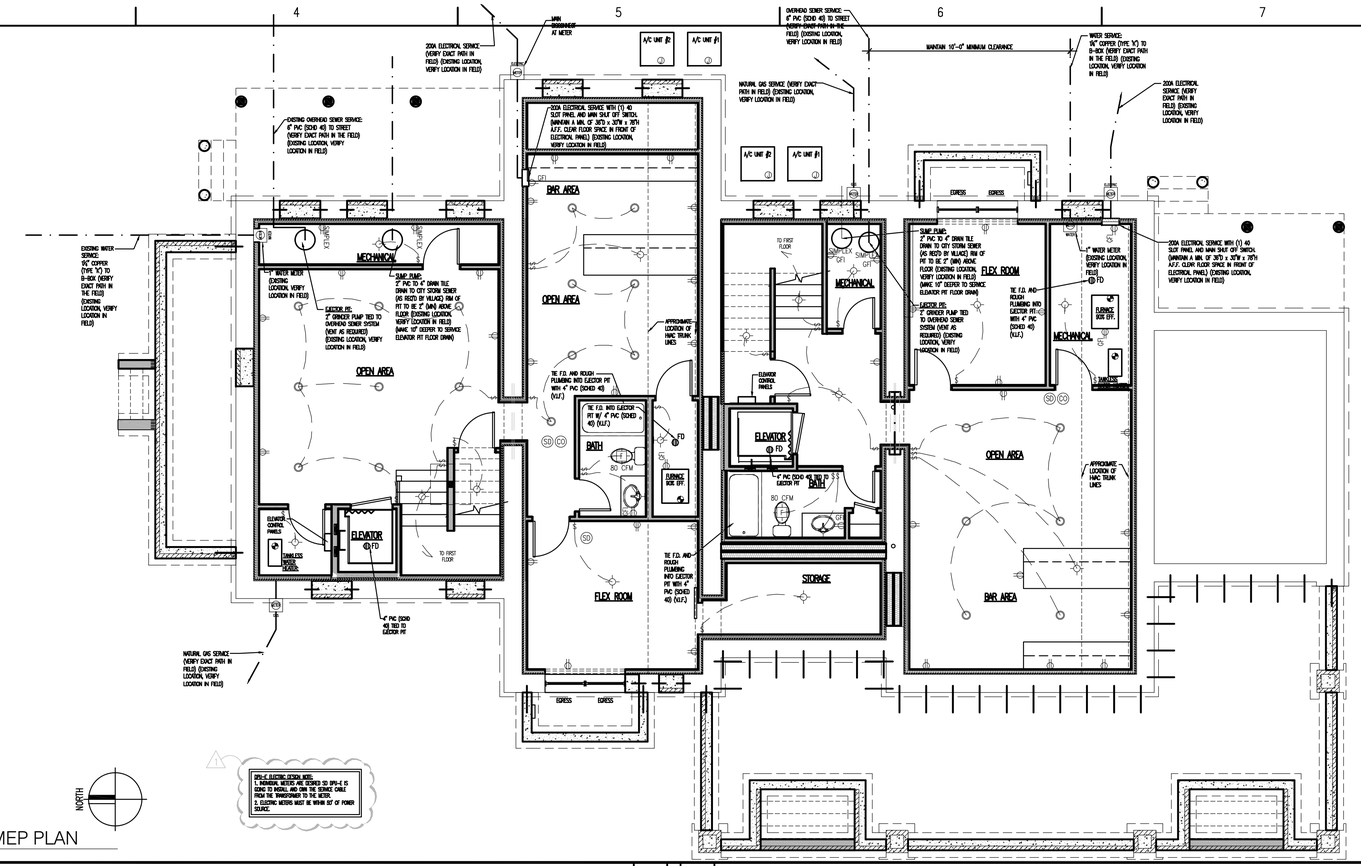

C3 FOUNDATION MEP PLAN
3/16" = 1'-0"

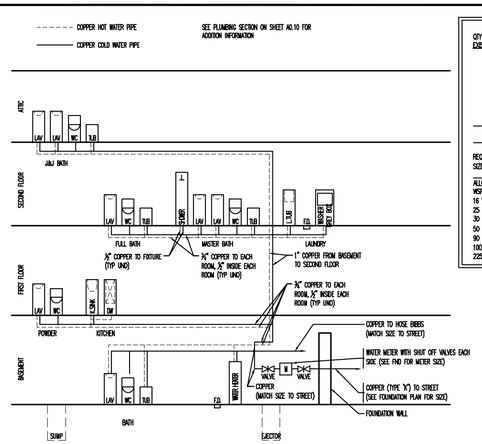

PLUMBING FIXTURE COUNTS:

QTY EXIST	QTY NEW	FIXTURE TYPE	UNIT	TOTAL
	0	WATER CLOSET (FLUSH VALVE)	10	
	5	WATER CLOSET (FLUSH TANK)	3	15
	7	LAVATORY – FAUCET	1	7
	4	SHOWER – FAUCET	2	8
	1	SHOWER – MIXING VALVE	2	2
	1	KITCHEN SINK – FAUCET	2	2
	1	LAUNDRY TRAYS – FAUCET	3	3
	1	DISHWASHER – AUTOMATIC	1	1
	1	LAUNDRY MACHINE – AUTOMATIC	2	2
	21	TOTALS	-	40

	PIPE SIZE:	METER SIZE:	
REQUIRED SIZE	1¼"	1"	
SIZE PROVIDED	1¼"	1"	<- USE THIS

ALLOWABLE FIXTURE UNITES FOR PIPE SIZE & METER SIZE:

WSFU	PIPE SIZE:	METER SIZE:
16 WSFU	¾"	¾"
25 WSFU	1"	¾"
30 WSFU	1"	1"
50 WSFU	1¼"	1"
90 WSFU	1½"	1½"
100 WSFU	1½"	2"
225 WSFU	2"	2"

B1 RISER DIAGRAM - WATER & PLUMBING FIXTURE UNITS - UNIT A
NO SCALE

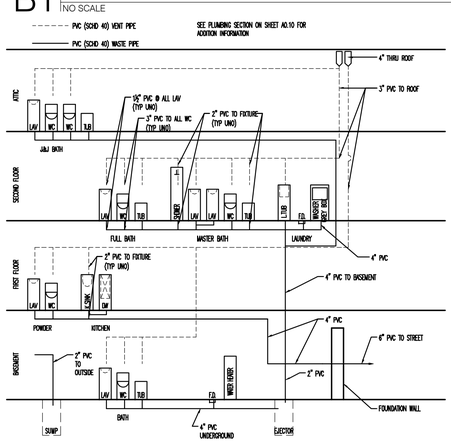

A1 RISER DIAGRAM - WASTE - UNIT A
3/4" = 1'-0"

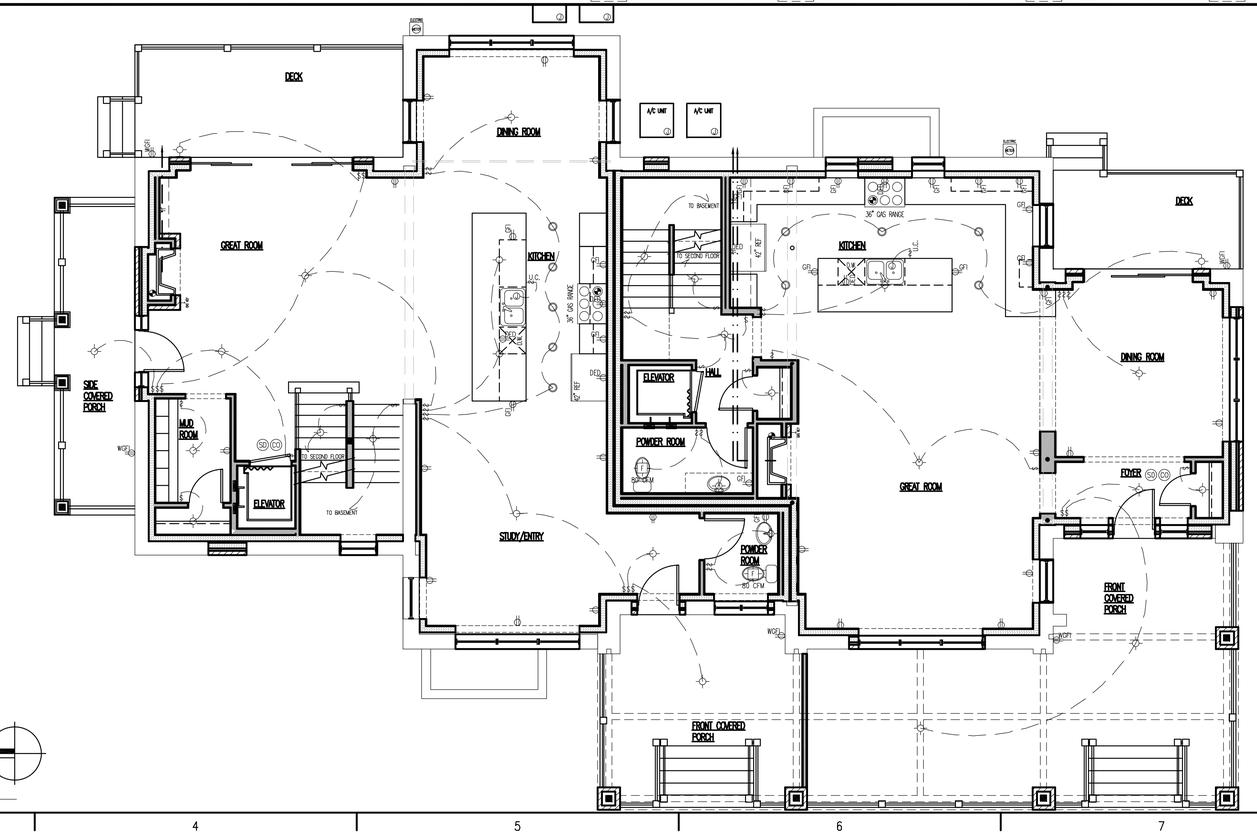

A3 FIRST FLOOR MEP PLAN
3/16" = 1'-0"

ARCHITECT
Craftstone Architects, Inc.
14150 S. Route 30, Suite 201
Plainfield, Illinois 60544
P: (815) 609-1997 F: (815) 327-8827
www.CraftstoneArchitects.com
Professional Design Firm #: 184-005597

BUILDER
DJK CUSTOM HOMES
Z Z Z 32 NICK R P RIVER P

DESIGNER
DJK CUSTOM DESIGN
B=863.939.3486
T=4187691337

LICENSED ARCHITECT
MICHAEL A. BUHR
001-015688
STATE OF ILLINOIS
01-09-2025 | 11-30-2026
DATED | EXPIRES

01-09-2025	I	4 FOR BLDG DEPT & OWNER COMMENTS 12/16/2024
11-22-2024	I	3 FOR BLDG DEPT & OWNER COMMENTS 11/07/2024
09-23-2024	I	PERMIT-BID

Heritage Place Mansion Remodel
126 & 128 N Wright St.
Naperville, IL 60563

Naperville 11/20/2025 11:00:00 AM REVIEW ID: 1000 Reviewed for Code Compliance

FINISHED BASEMENT & FIRST FLOOR MEP PLANS

DRAWN BY: EAO
CHECKED BY: MAB
PROJECT NUMBER: 2302016
SHEET NUMBER: A4.10
OF 19 SHEETS

© 2025 by Craftstone Architects, Inc.

GENERAL PLAN NOTES:
1. REFER TO ALL NOTES ON SHEET A0.10 FOR ADDITIONAL INFORMATION.
1.1. SECTION 1 FOR GENERAL REQUIREMENTS
1.2. SECTION 2 & 3 FOR EXCAVATION NOTES AND CONCRETE NOTES
1.3. SECTION 4 FOR MASONRY NOTES
1.4. SECTION 5 FOR STEEL NOTES
1.5. SECTION 6, 7, 8, & 9 FOR CARPENTRY, FIRE BLOCKING, MOISTURE CONTROL & DOOR-WINDOW NOTES.
1.6. SECTION 10, 11, 12 & 13 FOR MECHANICAL, PLUMBING, ELECTRICAL & SMOKE/CO DETECTOR NOTES.
1.7. SECTION 14 FOR ECC NOTES
1.8. SECTION 15, 16 & 17 FOR ATTIC/CRAWL ACCESS, MISCELLANEOUS & FINISH NOTES.
1.9. SECTION 18 FOR NAPERVILLE SPECIFIC NOTES.
2. SEE GENERAL PLAN NOTES ON FIRST FLOOR SHEET FOR ADDITIONAL INFORMATION.

ADDITIONAL NOTES:
1. EACH EV-CAPABLE SPACE SHALL FEATURE A CONTINUOUS RACEWAY OR CABLE ASSEMBLY INSTALLED BETWEEN AN ENCLOSURE OR OUTLET LOCATED WITHIN 3 FEET OF THE EV-CAPABLE SPACE AND A SUITABLE PANELBOARD OR OTHER ONSITE ELECTRICAL DISTRIBUTION EQUIPMENT. THE ELECTRICAL DISTRIBUTION EQUIPMENT TO WHICH THE RACEWAY OR CABLE ASSEMBLY CONNECTS SHALL HAVE SUFFICIENT DEDICATED SPACE AND SPARE ELECTRICAL CAPACITY FOR A 2-POLE CIRCUIT BREAKER OR SET OF FUSES.
2. INTERIOR LIGHTING CONTROLS: PERMANENTLY INSTALLED LIGHTING FIXTURES SHALL BE CONTROLLED WITH EITHER A DIMMER, AN OCCUPANT SENSOR CONTROL OR OTHER CONTROL THAT IS INSTALLED OR BUILT INTO THE FIXTURE.

DESIGN CRITERIA NOTES:
1. DESIGN LOADS – MINIMUM UNIFORMED DISTRIBUTED LIVE LOADS (IRC TABLE R301.5)

AREA	LIVE LOAD (PSF)	DEAD LOAD (PSF)
FIRST FLOOR	40	10
SECOND FLOOR	40	10
SLEEPING AREAS	30	10
STAIRS	40	10
UNINHABITABLE ATTICS W/O STORAGE	10	10
UNINHABITABLE ATTICS W/LIMITED STORAGE	20	10
HABITABLE ATTICS/ATTICS WITH FIXED STAIR	30	10
EXTERIOR BALCONIES & DECKS	40	10
FIRE ESCAPES	40	10
GUARDRAILS & HANDRAILS	200	
GUARD IN-FILL COMPONENTS	50	
PASSENGER VEHICLE GARAGES	50	

2. ALLOWABLE DEFLECTIONS (IRC TABLE R301.7)

AREA	ALLOWABLE DEFLECTION
FLOOR JOISTS	L/360
CEILING JOISTS	L/240
ROOF RAFTERS (NO CEILING ATTACHED)	L/180
LINTELS SUPPORTING MASONRY	L/600

3. LUMBER DESIGN SPECIFICATIONS

SIZE	LENGTHS	SPECIES	GRADE	Fb	E x10⁶
2x4	ALL	SPF	#2 OR BETTER	875	1.1
2x6	ALL	SPF	#2 OR BETTER	875	1.1
2x8	ALL	SPF	#2 OR BETTER	875	1.1
2x10	<20'	SPF	#2 OR BETTER	875	1.1
2X10	20' TO 32'	DOUG-FIR/HEM-FIR	#2 OR BETTER	875	1.1
2X12	<20'	SPF	#2 OR BETTER	875	1.1
2X12	20' TO 32'	DOUG-FIR/HEM-FIR	#2 OR BETTER	875	1.3
LVL BEAMS	ALL	BOISE-CASCADE	OR EQUAL	3,100	2.0
LVL POSTS	ALL	BOISE-CASCADE	OR EQUAL	2,750	1.8

4. FLOOR JOIST SPANS – 40 PSF LIVE / 10 PSF DEAD (FT–IN)

SPACING	SPECIES & GRADE	2x6	2x8	2x10	2x12
12"	DOUG–FIR #2	10–9	14–2	17–9	20–7
	HEM–FIR #2	10–0	13–2	16–10	20–4
	SPF #2	10–3	13–6	17–3	20–7
16"	DOUG–FIR #2	9–9	12–7	15–5	17–10
	HEM–FIR #2	9–1	12–0	15–2	17–7
	SPF #2	9–1	12–3	15–5	17–10

5. FLOOR JOIST SPANS – 30 PSF LIVE / 10 PSF DEAD (FT–IN)

SPACING	SPECIES & GRADE	2X6	2X8	2X10	2X12
12"	DOUG–FIR #2	11–10	15–7	19–10	23–0
	HEM–FIR #2	11–0	14–6	18–6	22–6
	SPF #2	11–3	14–11	19–0	23–0
16"	DOUG–FIR #2	10–9	12–1	19–11	19–11
	HEM–FIR #2	10–0	13–2	19–8	19–8
	SPF #2	10–3	13–6	19–11	19–11

6. CEILING JOIST SPANS – 20 PSF LIVE / 10 PSF DEAD (FT–IN)

SPACING	SPECIES & GRADE	2X4	2X6	2X8	2X10
12"	DOUG–FIR #2	9–10	15–0	19–1	23–3
	HEM–FIR #2	9–2	14–5	18–6	22–7
	SPF #2	9–5	14–9	18–9	22–11
16"	DOUG–FIR #2	8–11	13–0	16–6	20–2
	HEM–FIR #2	8–4	12–8	16–0	19–7
	SPF #2	8–7	12–10	16–3	19–10

7. ROOF RAFTERS SPANS – 30 PSF LIVE / 10 PSF DEAD (FT–IN)

SPACING	SPECIES & GRADE	2X4	2X6	2X8	2X10	2X12
12"	DOUG–FIR #2	8–7	13–6	17–8	21–7	25–1
	HEM–FIR #2	9–0	12–7	16–7	21–0	24–4
	SPF #2	8–3	12–11	17–0	21–4	24–8
16"	DOUG–FIR #2	7–10	12–1	15–4	18–9	21–8
	HEM–FIR #2	7–3	11–5	14–11	18–2	21–1
	SPF #2	7–6	11–9	15–1	18–5	21–5

8. TREATED DECK JOIST SPANS – 40 PSF LIVE / 10 PSF DEAD (FT–IN)

SPACING	SPECIES & GRADE	2X6	2X8	2X10	2X12
12"	SOUTHERN PINE	10–3	13–6	16–2	19–1
16"	SOUTHERN PINE	9–4	11–10	14–0	16–6

8. MORE
9.

A1 NOTES
NO SCALE

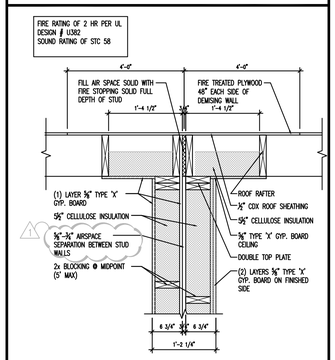

C2 ROOF @ DEMISING (2 HR)
3/4" = 1'-0"

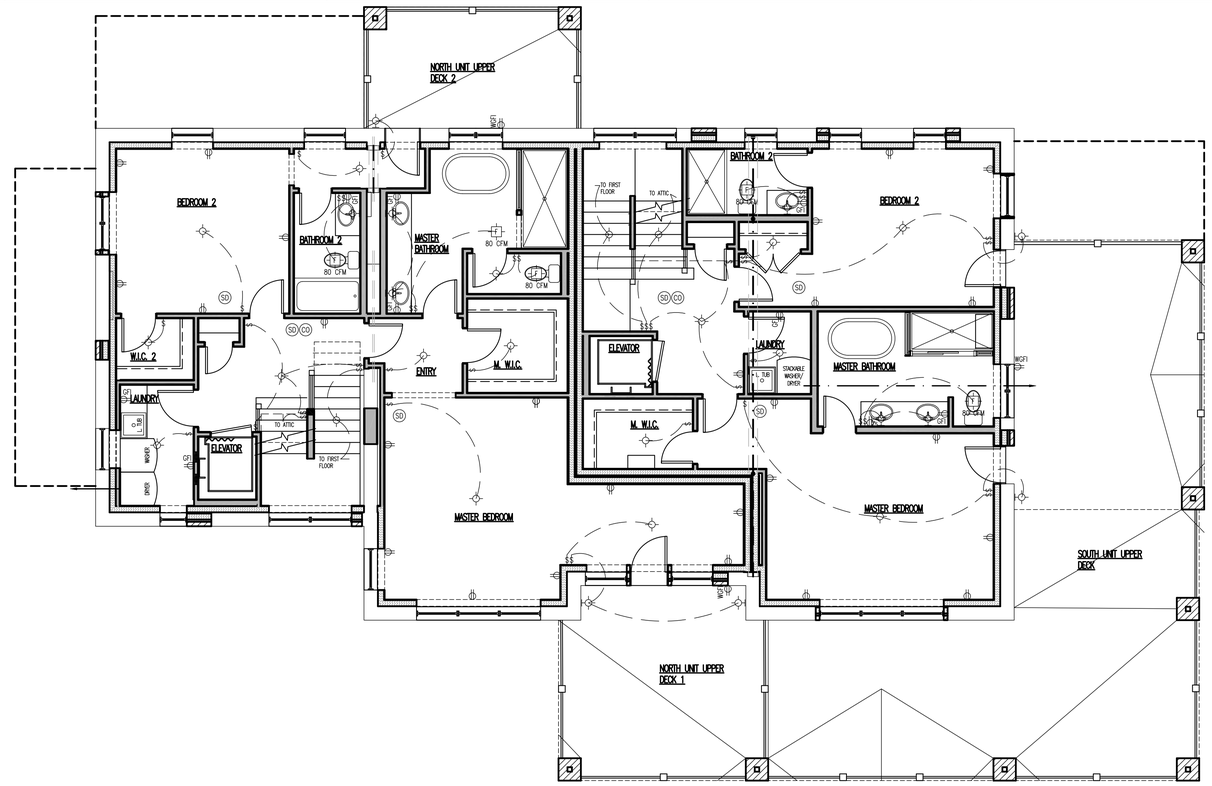

C7 SECOND FLOOR MEP PLAN
3/16" = 1'-0"

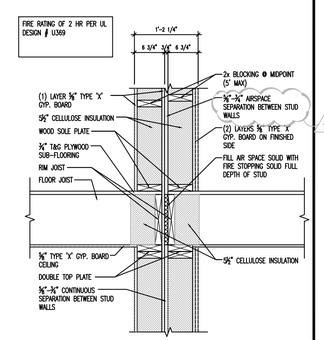

B2 FLOOR @ DEMISING (2 HR)
3/4" = 1'-0"

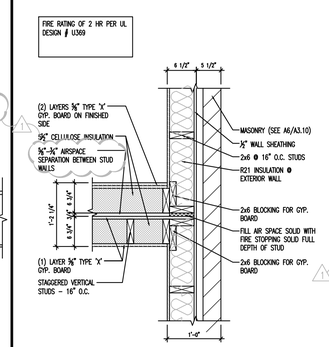

B3 EXT WALL @ DEMISING (2 HR)
3/4" = 1'-0"

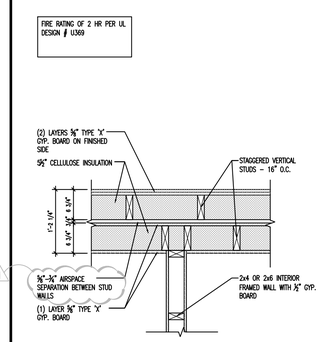

B4 INT WALL @ DEMISING (2 HR)
3/4" = 1'-0"

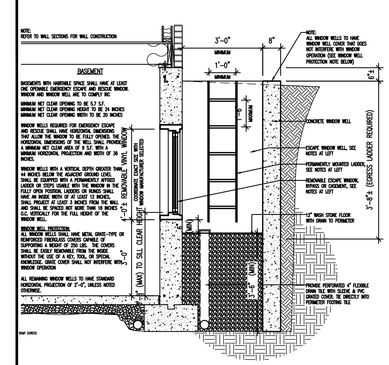

B5 BASEMENT EGRESS
3/8" = 1'-0"

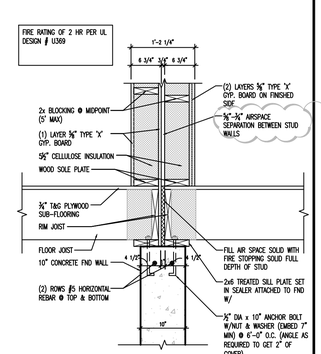

A2 FND @ DEMISING (2 HR)
3/4" = 1'-0"

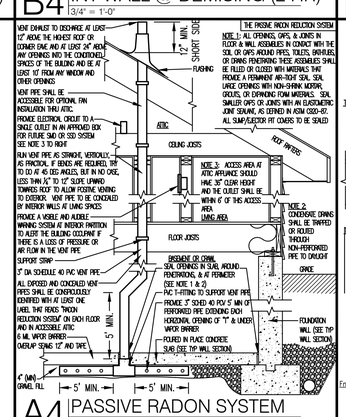

A4 PASSIVE RADON SYSTEM
NO SCALE

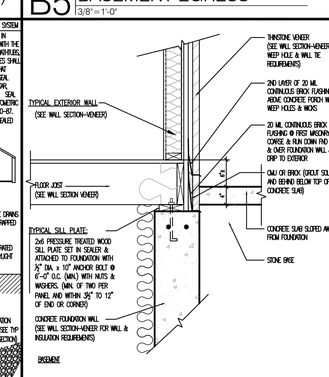

Fnd 2x4 Brick 2x10 FJ at Conc Slab Down Gin (12)
REV01: 11222024

A5 PORCH DETAIL
3/4" = 1'-0"

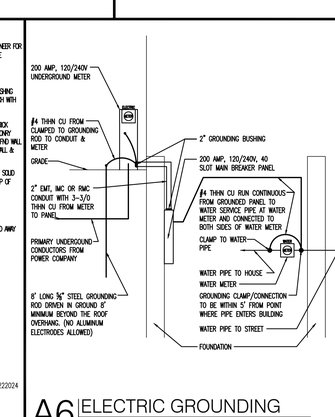

A6 ELECTRIC GROUNDING
NO SCALE

ARCHITECT
Craftstone Architects, Inc.
14150 S. Route 30, Suite 201
Plainfield, Illinois 60544
P: (815) 609-1997 F: (815) 327-8827
www.CraftstoneArchitects.com
Professional Design Firm #: 184-005597

BUILDER
DJK CUSTOM HOMES
2 2 2 E. JENICK R P. RIVER P

DESIGNER
DJK CUSTOM DESIGN
B=(813)939-3646
T=(483)763-9377

LICENSED ARCHITECT
MICHAEL A. BUHR
001-015688
STATE OF ILLINOIS
01-09-2025 | 11-30-2026
DATED | EXPIRES

01-09-2025	1 FOR BLDG DEPT & OWNER COMMENTS
11-22-2024	1 FOR BLDG DEPT & OWNER COMMENTS
09-23-2024	1 PERMIT-BD

Heritage Place Mansion Remodel
126 & 128 N Wright St.
Naperville, IL 60563

Naperville 11/20/2025 11:00:00 AM 1882D-AAH
Reviewed for Code Compliance

SECOND FLOOR MEP PLAN-DETAILS

DRAWN BY: EAO
CHECKED BY: MAB

PROJECT NUMBER: 2302016

SHEET NUMBER: A4.20

OF 19 SHEETS

© 2025 by Craftstone Architects, Inc.

GENERAL PLAN NOTES:

1. REFER TO ALL NOTES ON SHEET A0.10 FOR ADDITIONAL INFORMATION.
   - 1.1. SECTION 1 FOR GENERAL REQUIREMENTS
   - 1.2. SECTION 2 & 3 FOR EXCAVATION NOTES AND CONCRETE NOTES
   - 1.3. SECTION 4 FOR MASONRY NOTES
   - 1.4. SECTION 5 FOR STEEL NOTES
   - 1.5. SECTION 6, 7, 8, & 9 FOR CARPENTRY, FIRE BLOCKING, MOISTURE CONTROL & DOOR-WINDOW NOTES.
   - 1.6. SECTION 10, 11, 12 & 13 FOR MECHANICAL, PLUMBING, ELECTRICAL & SMOKE/CO DETECTOR NOTES.
   - 1.7. SECTION 14 FOR ECC NOTES
   - 1.8. SECTION 15, 16 & 17 FOR ATTIC/CRAWL ACCESS, MISCELLANEOUS & FINISH NOTES.
   - 1.9. SECTION 18 FOR NAPERVILLE SPECIFIC NOTES.
2. SEE GENERAL PLAN NOTES ON FIRST FLOOR SHEET FOR ADDITIONAL INFORMATION.

ADDITIONAL NOTES:

1. EACH EV-CAPABLE SPACE SHALL FEATURE A CONTINUOUS RACEWAY OR CABLE ASSEMBLY INSTALLED BETWEEN AN ENCLOSURE OR OUTLET LOCATED WITHIN 3 FEET OF THE EV-CAPABLE SPACE AND A SUITABLE PANELBOARD OR OTHER ONSITE ELECTRICAL DISTRIBUTION EQUIPMENT. THE ELECTRICAL DISTRIBUTION EQUIPMENT TO WHICH THE RACEWAY OR CABLE ASSEMBLY CONNECTS SHALL HAVE SUFFICIENT DEDICATED SPACE AND SPARE ELECTRICAL CAPACITY FOR A 2-POLE CIRCUIT BREAKER OR SET OF FUSES.
2. INTERIOR LIGHTING CONTROLS: PERMANENTLY INSTALLED LIGHTING FIXTURES SHALL BE CONTROLLED WITH EITHER A DIMMER, AN OCCUPANT SENSOR CONTROL OR OTHER CONTROL THAT IS INSTALLED OR BUILT INTO THE FIXTURE.

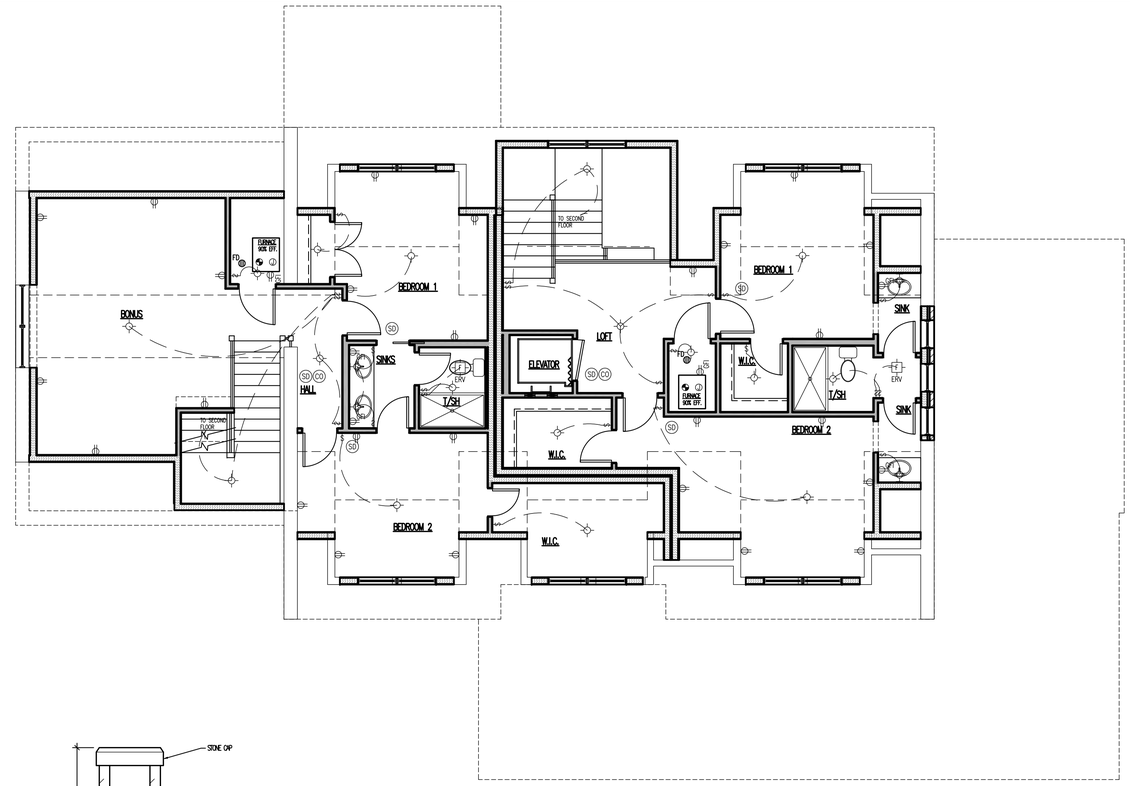

C7 ATTIC FLOOR MEP PLAN
3/16" = 1'-0"

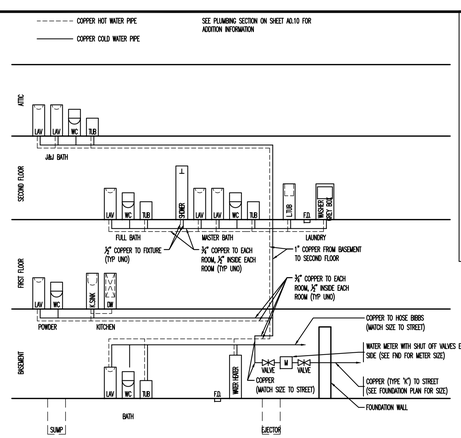

B1 RISER DIAGRAM - WATER & PLUMBING FIXTURE UNITS - UNIT B
NO SCALE

PLUMBING FIXTURE COUNTS:

QTY EXIST	QTY NEW	FIXTURE TYPE	UNIT	TOTAL
	0	WATER CLOSET (FLUSH VALVE)	10	
	5	WATER CLOSET (FLUSH TANK)	3	15
	7	LAVATORY – FAUCET	1	7
	4	BATHTUB – FAUCET	2	8
	1	SHOWER – MIXING VALVE	2	2
	1	KITCHEN SINK – FAUCET	2	2
	1	LAUNDRY TRAYS – FAUCET	3	3
	1	DISHWASHER – AUTOMATIC	1	1
	1	LAUNDRY MACHINE – AUTOMATIC	2	2
	21	TOTALS	–	40

	PIPE SIZE	METER SIZE
REQUIRED SIZE	1¼"	1"
SIZE PROVIDED	1¼"	1" <– USE THIS

ALLOWABLE FIXTURE UNITES FOR PIPE SIZE & METER SIZE:

WSFU	PIPE SIZE	METER SIZE
16 WSFU	¾"	¾"
25 WSFU	1"	¾"
30 WSFU	1"	1"
50 WSFU	1¼"	1"
90 WSFU	1½"	1½"
100 WSFU	1½"	2"
225 WSFU	2"	2"

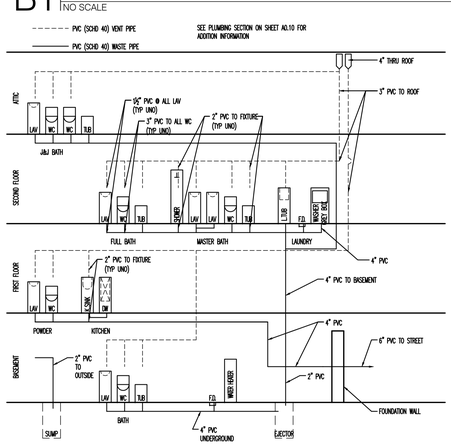

A1 RISER DIAGRAM - WASTE - UNIT B
3/4" = 1'-0"
RSER 2019-12 (48)

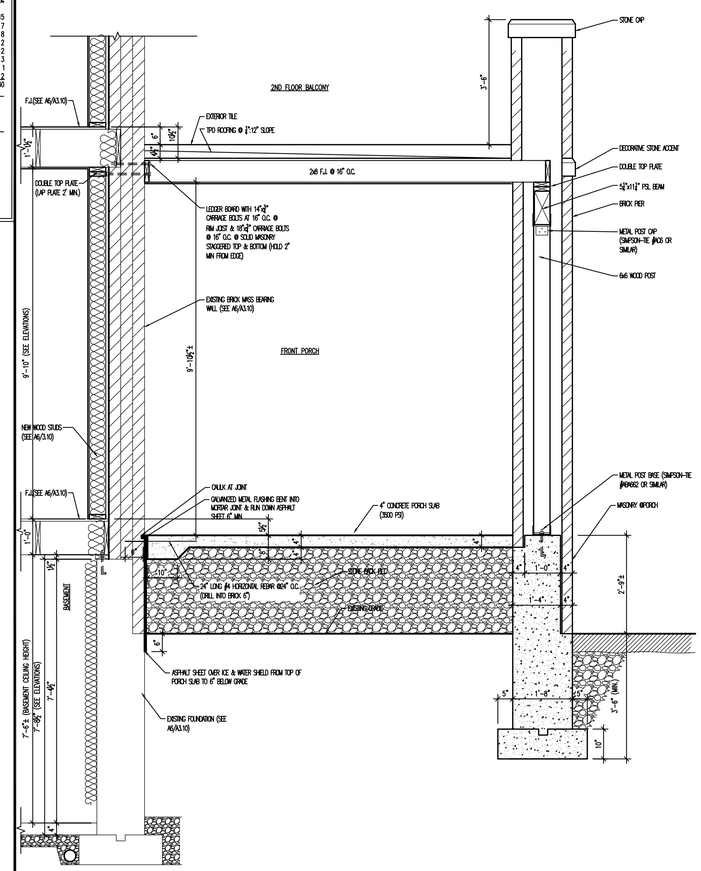

A3 PORCH SECTION
1/2" = 1'-0"
Sect-2SL_Fnd_8_Cripple 2x6_Wall 2x4_Siding 2020-01 (12)

ARCHITECT
Craftstone Architects, Inc.
14150 S. Route 30, Suite 201
Plainfield, Illinois 60544
P: (815) 609-1997 F: (815) 327-8827
www.CraftstoneArchitects.com
Professional Design Firm #: 184-005597

BUILDER
DJK CUSTOM HOMES
Z Z Z JINKER P RIVER P

DESIGNER
DJK CUSTOM DESIGN
B=(813)939-3646
T=(4837)691-9377

LICENSED ARCHITECT
MICHAEL A. BUHR
001-015688
STATE OF ILLINOIS
01-09-2025 | 11-30-2026
DATED | EXPIRES

01-09-2025	1	FOR BLDG DEPT & OWNER COMMENTS 12/16/2024
11-22-2024	1	FOR BLDG DEPT & OWNER COMMENTS 11/07/2024
09-23-2024	1	PERMIT-BID

Heritage Place Mansion Remodel

126 & 128 N Wright St.
Naperville, IL 60563

Naperville 11/20/2025 PERMIT NAPERVILLE Reviewed for Code Compliance

ATTIC FLOOR MEP PLANS

DRAWN BY: EAO
CHECKED BY: MAB

PROJECT NUMBER: 2302016

SHEET NUMBER: A4.30

OF 19 SHEETS

© 2025 by Craftstone Architects, Inc.

Attached: 2302016-Set-ITELECEIVA 1 | 2302016-Pnel2 | 2302016-Pnel0 | 2302016-RISER-Unit A 1 | 2302016-Holm-2 Floor | 2302016-Section-Two-Story Porch (v1) 190907S-dijkmanwebsign.png | ▷
Plotted: 01-09-2025 4:11pm (AAD) W=24.0x (LAS: Tim5)
Plotter Rev: 2020-01-14 B
Plotter Name: 2020-01-14 B.Pc3

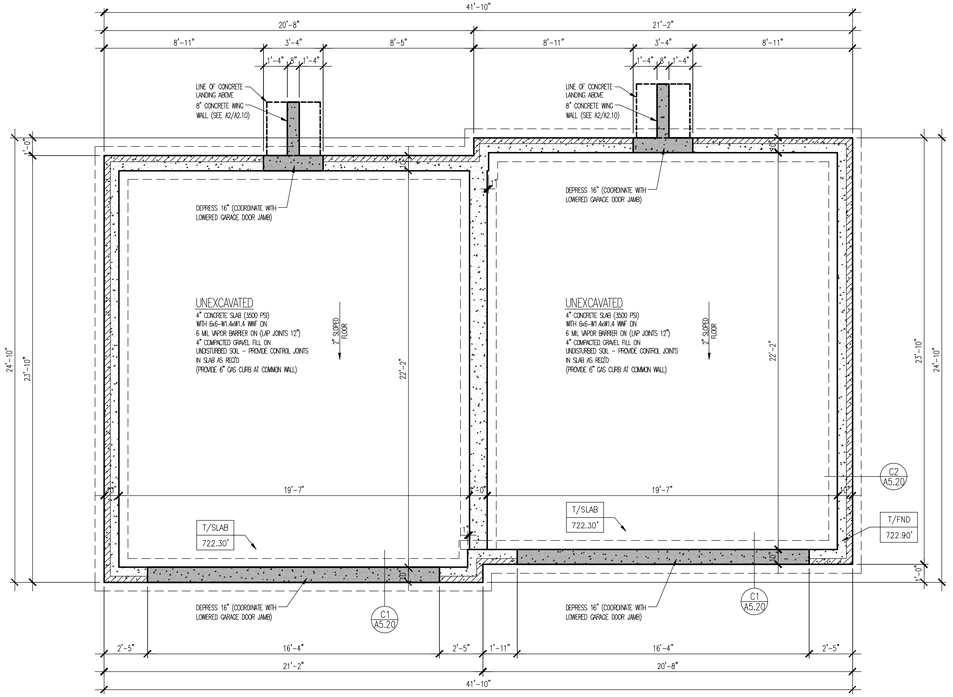

C1 FOUNDATION PLAN
1/4" = 1'-0"

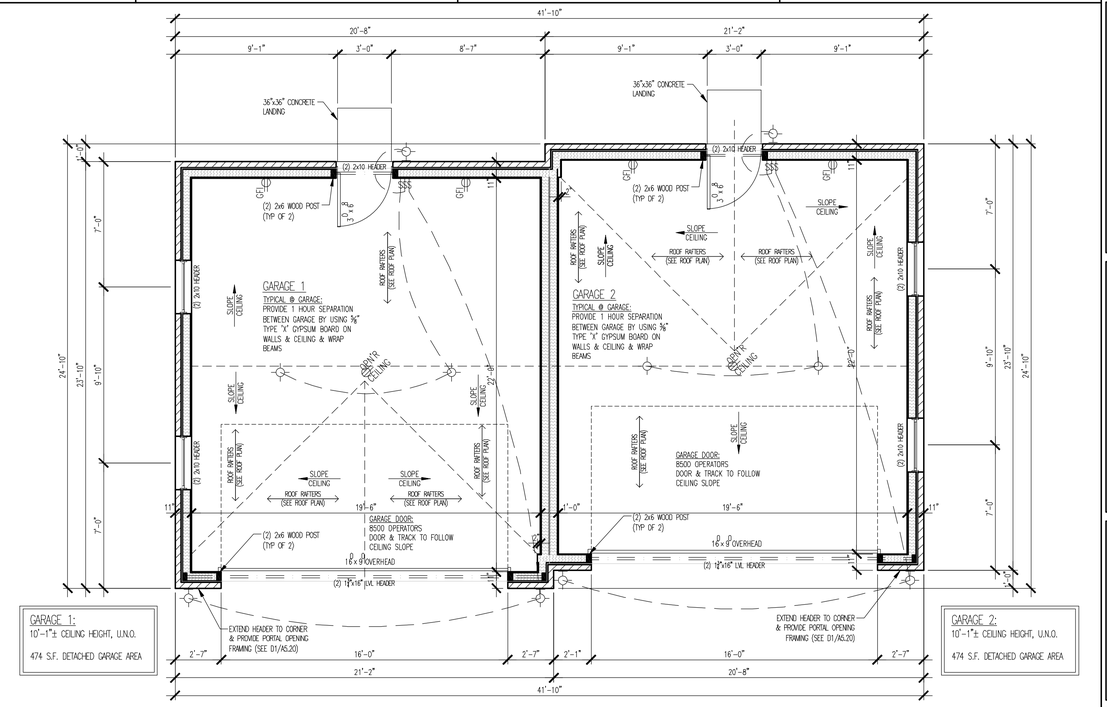

GARAGE 1:
10'-1"± CEILING HEIGHT, U.N.O.
474 S.F. DETACHED GARAGE AREA

GARAGE 2:
10'-1"± CEILING HEIGHT, U.N.O.
474 S.F. DETACHED GARAGE AREA

C4 FIRST FLOOR PLAN
1/4" = 1'-0"

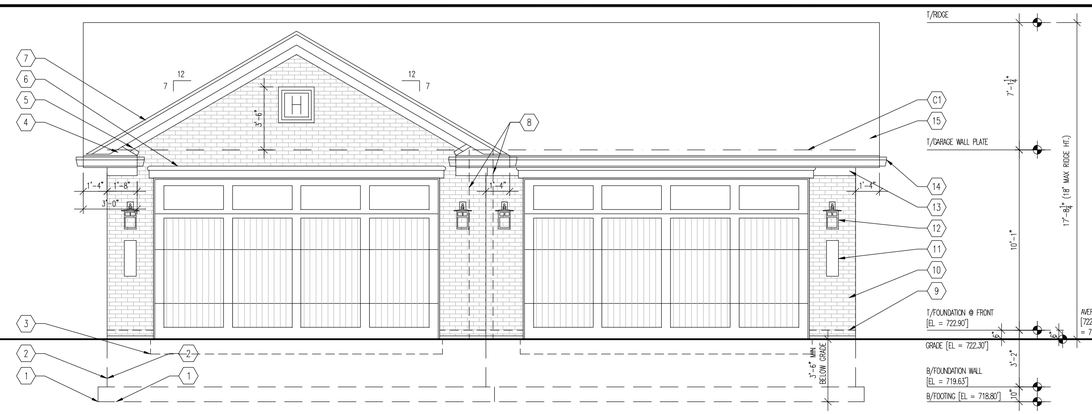

B1 FRONT ELEVATION
1/4" = 1'-0"

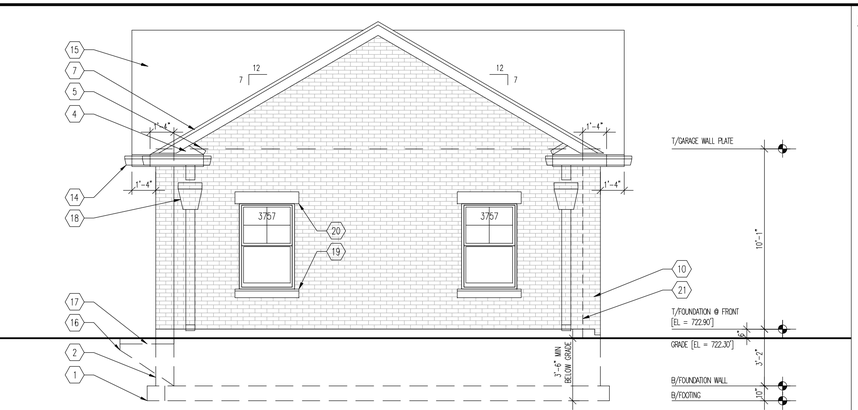

B4 LEFT ELEVATION
1/4" = 1'-0"

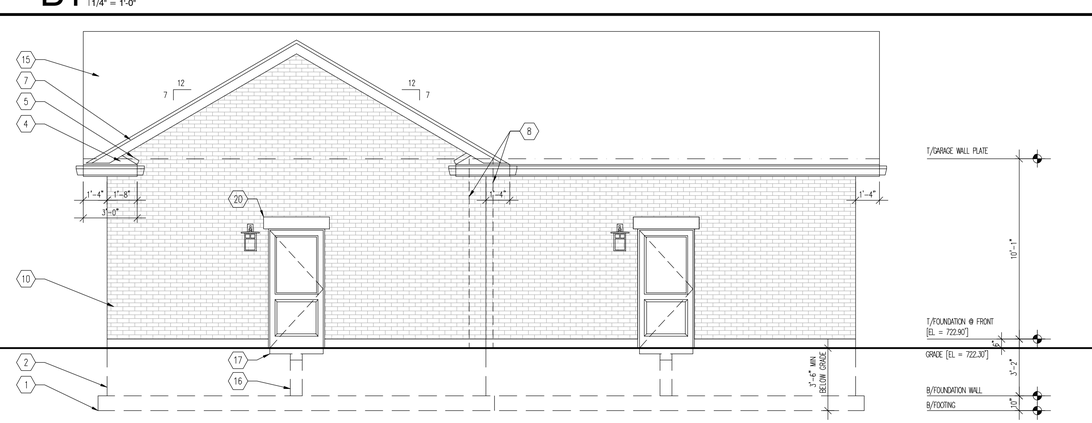

A1 REAR ELEVATION
1/4" = 1'-0"

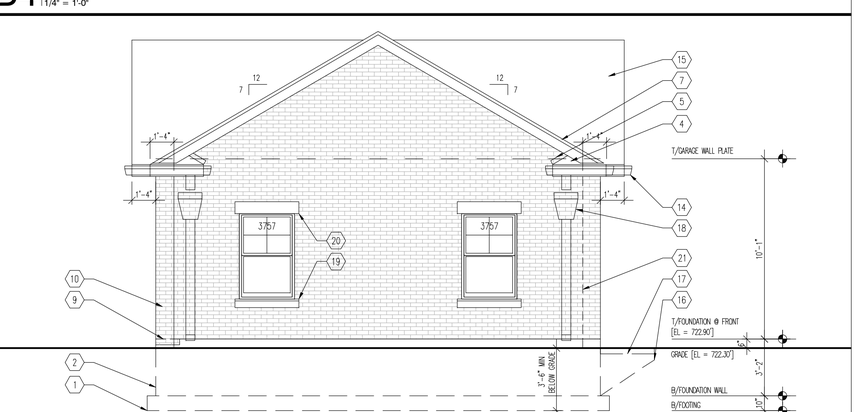

A4 RIGHT ELEVATION
1/4" = 1'-0"

EXTERIOR ELEVATION KEYNOTE LEGEND:

1. CONCRETE FOOTING
2. CONCRETE FOUNDATION
3. DEPRESSED FOUNDATION @ GARAGE DOOR
4. ASPHALT ROOF RETURN
5. EXPOSED METAL FLASHING @ ROOF & MASONRY WALL INTERSECTIONS (TYP ALL)
6. DECORATIVE HORIZONTAL STONE CAP
7. 1x2 ON 1x8 HARDIE BOARD ROOF RAKE
8. LINE OF DEMISING WALL BETWEEN UNITS BEHIND
9. LINE OF TOP OF FOUNDATION BEHIND
10. BRICK (TO MATCH HERITAGE PLACE TOWN HOMES)
11. ADDRESS STONE w/5" HIGH NUMBERS
12. EXTERIOR GRADE WALL MOUNTED LIGHT
13. 1x6 FREIZE
14. ALUMINUM GUTTERS & DOWNSPOUTS (OVERSIZED)
15. ASPHALT SHINGLES
16. 8" CONCRETE WING WALL
17. CONCRETE LANDING
18. ALUMINUM SCUPPER AT DOWNSPOUT
19. DECORATIVE HORIZONTAL STONE SILL
20. STONE CAP
21. LINE OF EXTERIOR WALL BEHIND

C1 FIRST FLOOR CEILING LINE

ARCHITECT
Craftstone Architects, Inc
14150 S. Route 30, Suite 201
Plainfield, Illinois 60544
P: (815) 609-1997 F: (815) 327-8827
www.CraftstoneArchitects.com
Professional Design Firm #: 184-005597

BUILDER
DJK CUSTOM HOMES
2 2 2 E. MINER R P RIVER P

DESIGNER
DJK CUSTOM DESIGN
B=863.859.3686
T=4187913937

LICENSED ARCHITECT
MICHAEL A. BUHR
001-015688
STATE OF ILLINOIS
01-09-2025 | 11-30-2026
DATED | EXPIRES

01-09-2025	1	FOR BLDG DEPT & OWNER COMMENTS
11-22-2024	2	FOR BLDG DEPT & OWNER COMMENTS
09-23-2024	1	PERMIT-BID

Heritage Place Mansion Remodel
126 & 128 N Wright St.
Naperville, IL 60563

Naperville 01/20/2025 RESD-2481 Reviewed for Code Compliance

DETACHED GARAGE

DRAWN BY: EAO
CHECKED BY: MAB

PROJECT NUMBER: 2302016

SHEET NUMBER: A5.10
OF 19 SHEETS

© 2025 by Craftstone Architects, Inc.

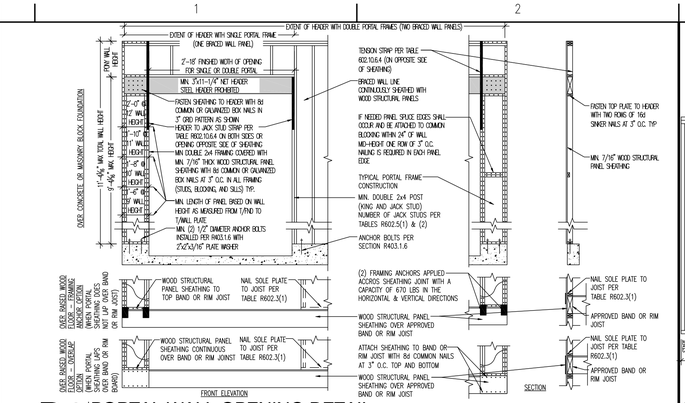

D1 PORTAL WALL OPENING DETAIL
NO SCALE (48)

FRAMING-NARROW WALL PORTAL OPENING 2019-12 (48)

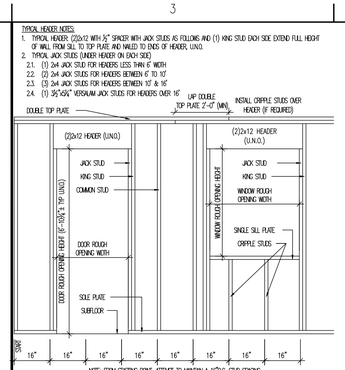

D3 FRAMING DETAIL
NO SCALE (32)

FRAMING-OPEN FRAMING 2019-12 (33)

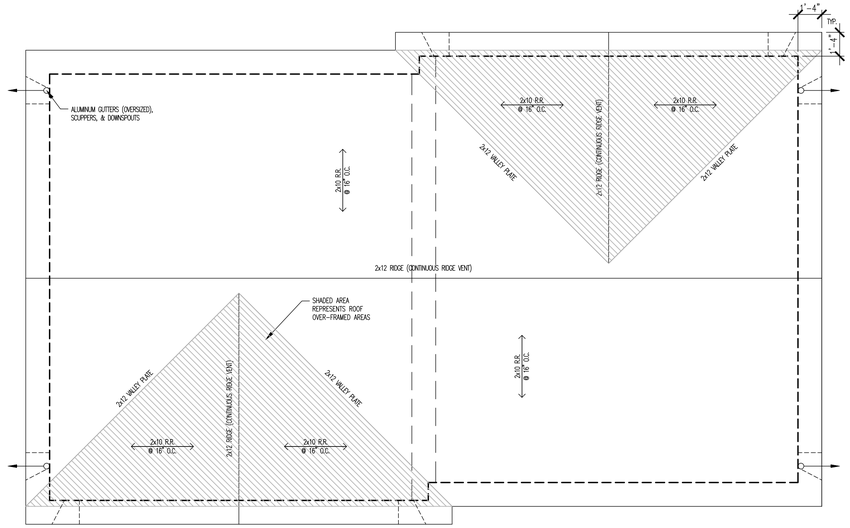

C4 ROOF PLAN
1/4" = 1'-0"

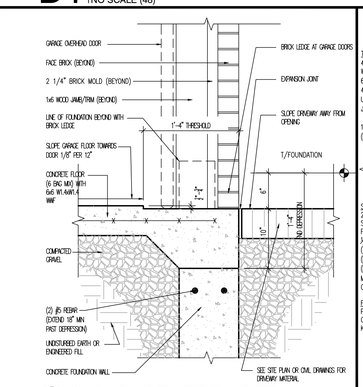

C1 GARAGE APRON DETAIL
1"= 1'-0"

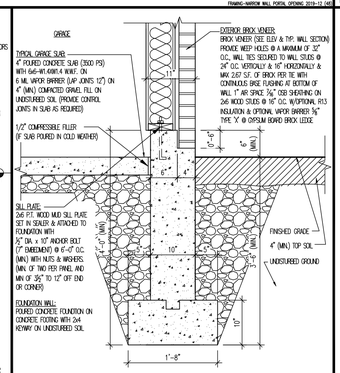

C2 GARAGE WALL SECTION
3/4" = 1'-0"

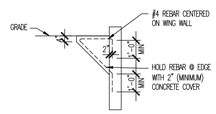

C3 WING WALL DETAIL
N.T.S.

ARCHITECT
Craftstone Architects, Inc
14150 S. Route 30, Suite 201
Plainfield, Illinois 60544
P: (815) 609-1997 F: (815) 327-8827
www.CraftstoneArchitects.com
Professional Design Firm #: 184-005597

BUILDER
DJK CUSTOM HOMES
Z.Z.Z. LENNOX R.P. RIVER P.

DESIGNER
DJK CUSTOM DESIGN
B=(913)393-3646
T=(487)231-5937

LICENSED ARCHITECT
MICHAEL A. BUHR
001-015688
STATE OF ILLINOIS
01-09-2025 | 11-30-2026
DATED | EXPIRES

01-09-2025	FOR BLDG DEPT & OWNER COMMENTS 12/16/2024
11-22-2024	FOR BLDG DEPT & OWNER COMMENTS 11/07/2024
09-23-2024	PERMIT-BD

Heritage Place Mansion Remodel
126 & 128 N Wright St.
Naperville, IL 60563

Naperville 01/02/2025 PERMIT REVIEW RESO.2491 Reviewed for Code Compliance

DETACHED GARAGE

DRAWN BY: EAO
CHECKED BY: MAB

PROJECT NUMBER: 2302016

SHEET NUMBER: A5.20

OF 19 SHEETS

© 2025 by Craftstone Architects, Inc.