PROPERTY ADDRESS:
1151 E WARRENVILLE ROAD
NAPERVILLE, IL 60563

P.I.N. 08-05-100-028

RETURN TO/PREPARED BY:
CITY OF NAPERVILLE
CITY CLERK'S OFFICE/
COMMUNITY SERVICES DEPARTMENT
400 SOUTH EAGLE STREET
NAPERVILLE, IL 60540

OWNER'S ACKNOWLEDGEMENT AND ACCEPTANCE AGREEMENT FOR NORTHWOODS OF NAPERVILLE

This Owner's Acknowledgement and Acceptance Agreement for Northwoods of Naperville Subdivision ("**Agreement**") located at 1151 E Warrenville Road, Naperville, IL 60563, is entered into by and between the City of Naperville, a home rule unit of local government under the Constitution and laws of the State of Illinois ("**City**" or "**City of Naperville**"), with an address of 400 South Eagle Street, Naperville, IL 60540, and M/I Homes of Chicago, LLC, an Delaware limited liability company ("**OWNER AND DEVELOPER**"), with offices at 2135 City Gate Lane, Suite 620, Naperville, IL 60563. The City and the OWNER AND DEVELOPER are together hereinafter referred to as the "**Parties**" and sometimes individually as "**Party**".

RECITALS

A. This Agreement pertains to certain real property located within the corporate limits of the City of Naperville with a common address of 1151 E Warrenville Road, Naperville, IL 60563, having a parcel identification number of 08-05-100-028 and is legally described on **Exhibit A** and depicted on **Exhibit B** (hereinafter referred as the "**SUBJECT PROPERTY**"). OWNER AND DEVELOPER is the owner of SUBJECT PROPERTY.

B. The OWNER AND DEVELOPER petitioned the CITY for approval of the following entitlements ("**Preliminary Plat and Zoning Entitlements**") under the Naperville Municipal Code ("**City Code**" or "**Code**"):

i. Rezoning of the property located at 1151 E Warrenville Road (Northwoods of Naperville Subdivision) from RD (Research and Development) to OCI (Office, Commercial and Institutional District);

ii. Conditional use to permit single-family attached dwelling units per Section 6-7F-3:11 (OCI: Conditional Uses);

iii. Preliminary Plat of Subdivision in order to develop sixty-four (64) townhome units per Section 7-2-2 (Subdivision Plat Procedures) with a deviation to Section 7-3-3:1 (Right-Of-Way Improvements: Streets) to permit a private street.

C. On May 6, 2025 the Naperville City Council approved OWNER AND DEVELOPER'S requests as set forth in Recital B above and passed the following ordinance**s** ("**Northwoods of Naperville Ordinances**"):

Ordinance 25-042	An ordinance rezoning the property located at 1151 E Warrenville Road (Northwoods of Naperville Subdivision) from RD (Research and Development) to OCI (Office, Commercial and Institutional District);
Ordinance 25-043	An ordinance approving a conditional use per Section 6-7F-3:11 (OCI District: Conditional Uses) to allow 64 single-family attached homes in the OCI Zoning District for the Northwoods of Naperville;
Ordinance 25-044	An ordinance approving the Preliminary Plat of Subdivision for Northwoods of Naperville per Section 7-2-2 (Subdivision Plat Procedures) with a deviation to Section 7-3-3:1 (Right-Of-Way Improvements: Streets) to permit a private street.

D. On _____, 2025 the Naperville City Council approved OWNER AND DEVELOPER'S request and passed the following ordinance ("**Northwoods of Naperville Final Plat of Subdivision Ordinance**"):

Ordinance 25-___	An ordinance approving a Final Plat of Subdivision and OAA for Northwoods of Naperville per Section 7-2-2 (Subdivision Plat Procedures).

E. In addition to the Northwoods of Naperville Ordinances and the Northwoods of Naperville Final Plat of Subdivision Ordinance, development of the SUBJECT PROPERTY shall also be subject to compliance with this Agreement, the Naperville Municipal Code as amended from time to time, and with final approved plans, including but not limited to final engineering plans prepared by Cage Civil Engineering., dated April 4, 2025, last revised July 7, 2025 attached hereto as **ExhibitC** ("**Final Engineering Plans**"), a final stormwater report, a final engineer's cost estimate, a final landscape plan (inclusive of a final tree preservation plan), a final subdivision plat (including a Tree Preservation Covenant), and approved elevations for the single-family attached units on the SUBJECT PROPERTY.

F. By entering into this Agreement, the City is acting pursuant to its home rule authority under the Constitution and laws of the State of Illinois.

NOW THEREFORE, in consideration of the mutual promises and agreements set forth herein, the parties agree as follows:

1. **Recitals Incorporated.** The foregoing Recitals are incorporated herein as though fully set forth in this Section 1.

2. **Ongoing Compliance.** In the development and operation of the SUBJECT PROPERTY, the OWNER AND DEVELOPER shall be subject to and shall fulfill all conditions set forth or referenced herein associated with the SUBJECT PROPERTY, including but not limited to: (i) the terms of this Agreement; (ii) the provisions of the Naperville Municipal Code, as amended from time to time; (iii) all ordinances and resolutions passed or adopted by the Naperville City Council related to the SUBJECT PROPERTY, including but not limited to the Northwoods of Naperville Ordinances and the Northwoods of Naperville Final Plat of Subdivision Ordinance; and (v) all applicable laws and regulations.

3. **School Donation:** OWNER AND DEVELOPER agrees to abide by the school donation provisions set forth in Section 7-3-5 (Dedication of Park Lands and School Sites or for Payments of Fees in Lieu of) of the Naperville Municipal Code, as amended from time to time. Further, OWNER AND DEVELOPER has elected to pay a cash-in-lieu of a contribution of land for the required school donation pursuant to the "Per Permit Payment" provisions set forth in Section 7-3-5:5.2.2 of the Naperville Municipal Code. Said Per Permit Payment shall be calculated based on the school donation table set forth in Section 7-3-5 of the Naperville Municipal Code in effect at the time of the building permit issuance and shall be made prior to issuance of the building permit. Payment of the required school donation shall not be paid under protest, or otherwise objected to.

4. **Park Donation:** OWNER AND DEVELOPER agrees to abide by the park donation provisions set forth in Section 7-3-5 (Dedication of Park Lands and School Sites or for Payments of Fees in Lieu of) of the Naperville Municipal Code, as amended from time to time. Further, OWNER AND DEVELOPER has elected to pay a cash-in-lieu of a contribution of land for the required park donation pursuant to the "Per Permit Payment" provisions set forth in Section 7-3-5:5.2.2 of the Naperville Municipal Code. Said Per Permit Payment shall be calculated based on the park donation table set forth in Section 7-3-5 of the Naperville Municipal Code in effect at the time of the building permit issuance and shall be made prior to issuance of the building permit. Payment of the required park donation shall not be paid under protest, or otherwise objected to.

5. **Fees Due.** OWNER AND DEVELOPER shall pay all fees (which fees shall not be paid under protest or otherwise objected to) set forth herein and required by the Naperville Municipal Code as amended from time to time, including but not limited to the following:

5.1 **Engineering Review Fee:** The Engineering Review Fee for final engineering will be $150 per page for Final Engineering Review. This fee is due prior to release of City staff's final engineering plan review comments for the SUBJECT PROPERTY.

5.2 **Site Permit Review Fee:** The Site Permit Fee will be determined based on 1.5% of the approved engineer's cost estimate. This fee is due prior to issuance of the site permit.

5.3 **Infrastructure Availability Charges and User Fees:** Upon request for connection and service to the City's water system, OWNER AND DEVELOPER shall pay for all water infrastructure availability charges and user fees in accordance with Title 8 of the Naperville Municipal Code as amended from time to time, as are applicable to that portion of the SUBJECT PROPERTY for which connection and service is requested. Fees for connection to the City's sanitary system will not be charged for the SUBJECT PROPERTY since the sanitary sewer system that will serve the SUBJECT PROPERTY will be privately owned, maintained, repaired, reconstructed, and operated. OWNER AND DEVELOPER shall pay for all sanitary user fees in accordance with Title 8 of the Naperville Municipal Code as amended from time to time, as are applicable to that portion of the SUBJECT PROPERTY for which the service is requested.

5.4 **Facility Installation Charges and User Fees:** Upon a request for connection and service to the City of Naperville electric system, the OWNER AND DEVELOPER shall pay for all Facility Installation Charges (FIC) and user fees in accordance with Title 8 of the Naperville Municipal Code as amended from time to time, as are applicable to that portion of the SUBJECT PROPERTY for which connection and service is requested.

5.5 **Other Fees and Costs:** Any resubmission fees, or other applicable fees or costs not listed in 5.1 through 5.4 above, shall be charged in accord with the provisions of the Naperville Municipal Code or applicable policies and regulations then in effect, including but not limited to the fee schedule in Section 1-9F (Municipal Finances: Development, Entitlement and Other Required Application Process Fees) and Section 1-9H (Municipal Finances: Fees for Construction and New Development).

6. **The Northwoods of Naperville Townhome Association.**

6.1 **Formation of The Northwoods of Naperville Townhome Association.** OWNER AND DEVELOPER shall cause the formation of a homeowner's association for the SUBJECT PROPERTY, to be known as The Northwoods of Naperville Townhome Association ("**Northwoods HOA**"), and shall record a Declaration of Covenants for The Northwoods of Naperville Townhome Association ("**Declaration**"). The Northwoods HOA shall be formed and the

Declaration shall be recorded prior to OWNER AND DEVELOPER conveying any portion of the SUBJECT PROPERTY to any person or entity.

6.2 **Transfer of Obligations to the Northwoods HOA**. It is the intent of the OWNER AND DEVELOPER to create the Northwoods HOA to govern the Subject Property. OWNER AND DEVELOPER shall transfer its obligations hereunder to the Northwoods HOA pursuant to the Declaration at OWNER AND DEVELOPER's discretion and in accord with all applicable laws Notwithstanding the foregoing, said transfer to the Northwoods HOA shall not occur until not less than sixty-five percent (65%) of the residential units have been purchased.

OWNER AND DEVELOPER shall give the City Engineer written notice of said transfer of obligations, and accurate contact information for the Northwoods HOA, not less than thirty (30) days prior to such transfer. However, until the Northwoods HOA is formed and the transfer has been completed, the OWNER AND DEVELOPER shall be responsible for all obligations provided for herein. In the event that the Northwoods HOA is formed, but disbanded or otherwise ceases to exist in the future, all obligations attributable to the Northwoods HOA as provided for herein shall become the joint and several responsibility of each lot owner of the SUBJECT PROPERTY.

7. **PRIVATE IMPROVEMENTS**

7.1 The Northwoods of Naperville Subdivision improvements, as depicted on **Exhibit C** ("**FINAL ENGINEERING PLANS**"), consist of both "Public Improvements" and "Private Improvements". Those Improvements which are Public Improvements are listed on **Exhibit D** ("**PUBLIC IMPROVEMENTS**"). Those Improvements which are Private Improvements (which Private Improvements are covered by the Northwoods Dormant Special Service Area set forth in Section 8 hereof) are listed on **Exhibit E** ("**PRIVATE IMPROVEMENTS**").

The OWNER AND DEVELOPER shall be solely responsible for the design, installation, and construction of the PRIVATE IMPROVEMENTS and PUBLIC IMPROVEMENTS. Upon acceptance of the PUBLIC IMPROVEMENTS, the City shall be responsible for the ownership, operation, maintenance, repair, and replacement of the PUBLIC IMPROVEMENTS. The City will not accept ownership of the PRIVATE IMPROVEMENTS.

The PRIVATE IMPROVEMENTS shall be owned, operated, maintained, repaired, and replaced by the OWNER AND DEVELOPER until such time as OWNER AND DEVELOPER conveys the PRIVATE IMPROVEMENTS to the Northwoods HOA, at which time the Northwoods HOA shall be solely responsible

for the ownership, operation, maintenance, repair, and replacement of said PRIVATE IMPROVEMENTS. (the "**Private Improvement Obligations**").

Notice of Owner Obligations with respect to the Private Improvement Obligations shall be provided as set forth in Section 11 below and each subsection thereof.

7.1.1 **Private Roadway**

7.1.1.01 **Private Road Improvements.** The Parties acknowledge that the SUBJECT PROPERTY is to be developed with a private street **("Private Roadway")** and that there shall be no publicly owned roadway on the SUBJECT PROPERTY. The Private Roadway will be constructed and maintained in accordance with the Final Engineering Plans. The OWNER AND DEVELOPER, and subsequently the Northwoods HOA, shall be solely responsible for the design, construction, installation, repair, reconstruction, maintenance and operation of said Private Roadway, for private street lights, private sidewalks/carriage walks, trees adjacent to the Private Roadway, and all signage, including but not limited to signage regarding parking on the Private Roadway (together hereinafter referenced as **"Private Roadway Improvements"**). OWNER AND DEVELOPER, and subsequently the Northwoods HOA, shall be responsible to provide snow plowing services and any other services necessary for the Private Roadway Improvements to be operated and maintained in good repair. The Private Roadway Improvements shall be considered part of the PRIVATE IMPROVEMENTS. The City shall have no responsibility or liability for said Private Roadway Improvements, including but not limited to any duty to repair, maintain, or reconstruct said Improvements or to provide public services such as snowplowing except to the extent that the Northwoods Dormant Special Service Area provided for herein is activated by the City.

7.1.1.02 **Private Roadway Parking Restrictions**. As depicted on the Final Engineering Plans, parking

shall be prohibited on the Private Roadway (which does not include that section of fourteen (14) dedicated parallel parking spaces included within an inset depicted on the Final Engineering Plans). OWNER AND DEVELOPER shall install "No Parking" signs prior to issuance of the first occupancy permit within the SUBJECT PROPERTY which parking signs shall be repaired, maintained, and replaced (but not removed) as needed, by the Northwoods HOA. The OWNER AND DEVELOPER, and the HOA (upon transfer of PRIVATE IMPROVEMENTS to the Northwoods HOA), shall be responsible to take appropriate measures to enforce the No Parking requirements, including but not limited to fines and towing, to ensure that the no parking areas remain unobstructed.

7.1.2 **Private Sanitary Lift Station and Sanitary Gravity Main System.** As depicted the Final Engineering Plans OWNER AND DEVELOPER shall, at its sole cost, design and construct a new sanitary gravity main system for the proposed development, a new sanitary lift station, and a new sanitary force main from the new lift station to the existing sanitary infrastructure, including connection to the existing City sanitary infrastructure and all associated equipment to serve the SUBJECT PROPERTY (together referenced herein as **"Private Sanitary Lift Station and Sanitary Gravity Main System"**). The Private Sanitary Lift Station and Sanitary Gravity Main System shall be considered part of the PRIVATE IMPROVEMENTS for which the OWNER AND DEVELOPER, and subsequently the Northwoods HOA shall be solely responsible. Said Private Sanitary Lift Station and Sanitary Gravity Main System shall be completed, inspected and approved by the City, and operational prior to issuance of the first occupancy permit for any part of the SUBJECT PROPERTY. Notwithstanding the foregoing, if the Private Sanitary Lift Station is operational, but a portion of the Sanitary Gravity Main is still being finalized, the Director of DPU-W may give written authorization to allow occupancy subject to the

remainder of the work being completed, inspected, and approved within a defined timeframe.

7.2 Private Improvement Capital Contribution. The Declaration shall set forth the requirement for a private improvement capital contribution to be made (the "**Private Improvement Capital Contribution**") to fund the private improvement capital account (the "**Private Improvement Capital Account**"). The Private Improvement Capital Account shall be used solely for the maintenance, repair and replacement associated with the Private Improvement Obligations. The Private Improvement Capital Account shall initially be funded based upon that amount equal to two (2) monthly assessments payable to the Northwoods HOA upon closing of the sale of a unit by each initial purchaser for value. Thereafter, each subsequent purchaser for value shall make a payment to the Northwoods HOA in the amount of one (1) monthly assessment upon closing. Additionally, the Northwoods HOA shall assess such fees from each unit owner as are reasonably necessary and appropriate to reserve funds for the scheduled replacement of the private improvements.

8. **Northwoods Dormant Special Service Area for Private Improvements.**

8.1 OWNER AND DEVELOPER shall petition the Naperville City Council, and in conjunction with the City, but at OWNER AND DEVELOPER'S sole cost, shall take all steps necessary to form a back-up or "dormant" special service area (herein referenced as the "**Northwoods Dormant Special Service Area**") on the SUBJECT PROPERTY in order to provide funding for the continued operation, maintenance, repair and reconstruction of the PRIVATE IMPROVEMENTS as defined herein in the event that either the OWNER AND DEVELOPER or the Northwoods HOA fail to timely and adequately perform some or any of the responsibilities associated with said PRIVATE IMPROVEMENTS. All notices required to be given, and all costs associated with the formation of the Northwoods Dormant Special Service Area, shall be the responsibility of the OWNER AND DEVELOPER. The City Engineer, with the assistance of the OWNER AND DEVELOPER, shall determine the amount of taxes estimated to be necessary to be generated by the Northwoods Dormant Special Service Area for the first year of its activation in the event the Dormant Special Service Area is activated to provide for some or all of the PRIVATE IMPROVEMENTS.

8.2 An ordinance passed by the Naperville City Council approving the establishment of a dormant special service area to be known as the "**Northwoods Dormant Special Service Area**" must be recorded with the DuPage County Recorder prior to OWNER AND DEVELOPER conveying any portion of the SUBJECT PROPERTY to any person or entity.

8.3 The existence of the Northwoods Dormant Special Service Area and its purposes, along with a reference to its recording number shall be included in the Declaration as part of the Notice of Owner Obligations set forth in Section 11 and each subsection thereof.

8.4 A decision to activate the Northwoods Dormant Special Service Area shall be made at the reasonable discretion of the City in the event that either the OWNER AND DEVELOPER or the Northwoods HOA fail to timely and adequately perform some or any of the responsibilities associated with said PRIVATE IMPROVEMENTS. The City shall give the OWNER AND DEVELOPER, or the Northwoods of Naperville Townhome Association, as applicable, not less than sixty (60) days' notice of its intent to activate the Northwoods Dormant Special Service Area.

9. Notice of Owner Obligations.

9.1 OWNER AND DEVELOPER shall provide prospective purchasers of dwelling units within the Northwoods of Naperville Subdivision with a written notice, attached to the purchase and sale agreement, which sets forth, at a minimum, the existence of the Northwoods HOA and the anticipated budgeted obligations of the Northwoods HOA, which will include but may not be limited to the following (together hereinafter referenced as the "**Notice of Obligations**"):

(i) the ongoing operation, maintenance, repair of the PRIVATE IMPROVEMENTS as set forth in the Declaration for the Northwoods HOA;

(ii) the provision of Private Refuse and Recycling Services;

(iv) notice of the Tree Preservation Covenants and Restrictions included on the **FINAL PLAT OF SUBDIVISION** attached hereto as **Exhibit B**; and

(v) notice of the Northwoods Dormant Special Service Area.

The above referenced owner obligations shall also be included in the Declaration. No amendment or modification of the Declaration shall delete said obligations without prior written City approval.

10. **Private Collection and Disposal of Refuse, Recycling, and other Materials.**

10.1 OWNER AND DEVELOPER, and upon conveyance of the SUBJECT PROPERTY to the Northwoods HOA, the Northwoods HOA shall be solely responsible to provide for the collection, disposal, and payment of all refuse, recyclable, and other materials for the SUBJECT PROPERTY (hereinafter referenced together as "**Private Refuse and Recycling Collection Services**".) Private Refuse and Recycling Collection Services shall not be included in the PRIVATE IMPROVEMENTS which shall be the subject of the Northwoods Dormant Special Service Area as provided herein; however, notice of this obligation shall be

included in the Notice of Owner Obligations set forth in Section 11 and each subsection thereof.

10.2 So long as either the OWNER AND DEVELOPER or the Northwoods HOA provide and pay for Private Refuse and Recycling Collection Services for the SUBJECT PROPERTY, the CITY shall not charge the OWNER AND DEVELOPER or the Northwoods HOA for any City managed refuse and recycling collection services.

11. **Northwoods Tree Preservation Covenant.**

11.1 In conjunction with developing the SUBJECT PROPERTY as a residential community, OWNER AND DEVELOPER wishes to preserve the wooded character of a portion of the SUBJECT PROPERTY as depicted on the Final Plat of Subdivision attached hereto as **Exhibit B** ("**Preservation Area"**), as set forth in the provisions of the Northwoods Tree Preservation Covenant as included on sheet 3 of the Final Plat of Subdivision. Said Northwoods Tree Preservation Covenant shall provide that said Covenant and the Tree Preservation Plan included within the Final Landscaping Plans attached hereto as **Exhibit G** ("**Final Landscaping Plans**") may not be amended or modified without the prior written approval of the City.

12. **Storm Water Management Facilities.**

12.1 There is an existing storm water management basin located in the southeast portion of the Subject Property (located within the area covered by the Preservation Area described in Section 11.1 above). In addition OWNER AND DEVELOPER will be constructing a **"Wetland Bottom BMP"** (a basin designed to provide storm water volume control and pollutant filtration) directly east of buildings 3, 4, and 5 of the Subject Property as depicted on the Final Engineering Plans. The stormwater management basin and the Wetland Bottom BMP are together hereinafter referenced as the "**Storm Water Management Facilities**".

OWNER AND DEVELOPER, and subsequently the Northwoods HOA, shall be responsible for the ongoing maintenance, repair, and reconstruction of the Storm Water Management Facilities to ensure that they are, at all times, in good operational order and serving their intended purpose. operation in good operational order.

12.1.1 OWNER AND DEVELOPER, and the Northwoods Association upon transfer of obligations per Section 6.2 hereof, shall meet all criteria for compliance with performance standards for native plantings within the proposed woodland seeded areas identified on the Final Landscaping Plans (**Exhibit G**) as *Native Woodland Seed Mix* ("**Woodland Seeded Areas**") and the Wetland Bottom BMP, as those standards are set forth in the DuPage County Countywide Stormwater & Floodplain Ordinance and as set forth in the Storm Water Management Report

prepared by Cage Civil Engineering dated April 4, 2025 and revised July 7, 2025, an excerpt of which is attached hereto as **Exhibit F**. Notwithstanding the foregoing, the obligations set forth in this Section 12.1.1 do not apply to any existing native plantings that may be located within the Preservation Area and which the same shall not be required to be protected.

12.1.2 **No New Impervious Areas.** Pursuant to the Final Engineering Plans for the SUBJECT PROPERTY approved by the City Engineer, the impervious area for the Northwoods of Naperville development on the SUBJECT PROPERTY shall not exceed 25,000 square feet more than the pre-existing impervious area of the IHA office building, parking lot, access drive, and appurtenances (the "**Net New Impervious Area**"). Any additional structures or additions added to the SUBJECT PROPERTY not shown on said approved final engineering, including but not limited to decks and patios, which cause the Net New Impervious Area on the SUBJECT PROPERTY to exceed 25,000 square feet may only be permitted if necessary site runoff storage is provided on the SUBJECT PROPERTY in accord with the then effective requirements of the DuPage County Countywide Stormwater & Floodplain Ordinance, and approved by the City Engineer.

13. **Financial Surety.** Financial surety in a form and from a source acceptable to the City Attorney shall be provided and maintained in the amount of 110% of the approved engineer's estimate of probable construction cost ("EOPCC") attached hereto as **Exhibit H**, which guarantees the completion of those improvements set forth in the EOPCC. Financial surety shall be received and approved prior to issuance of a site development permit. Notwithstanding provision of said surety, until the said improvements have been inspected and approved by the City, the OWNER AND DEVELOPER shall remain obligated for completion of said improvements and/or (at the City's sole discretion) to pay any costs for said improvements to the extent that the surety is not sufficient to pay for the costs of said improvements, or in the event of any denial, or partial denial of coverage by the surety, or failure of the surety to timely respond to a demand for payment. Prior to acceptance of those improvements to be accepted by the City, the OWNER AND DEVELOPER shall provide the City with a maintenance surety as provided in Section 5-9-8 of the Naperville Municipal Code, as amended from time to time, in a form approved by the City Attorney.

As to any surety, or maintenance surety, provided by the OWNER AND DEVELOPER to the City hereunder, the OWNER AND DEVELOPER agrees that: (1) at no time shall the City be liable for attorneys' fees with respect thereto; (2) OWNER AND DEVELOPER shall be liable to pay the City's reasonable attorneys' fees and costs (in-house or outside counsel) in enforcement thereof; and (3) the list of circumstances set forth in such surety (including any exhibit thereto) as bases for default thereunder shall entitle the City to draw on said surety.

14. **Building Permits.** No building permits shall be issued for the SUBJECT PROPERTY, or any portion thereof, until the Final Subdivision Plat has been recorded and until the City

has determined that sufficient improvements have been installed and are functioning to protect the health, safety, and welfare of the public.

15. **General Conditions.**

15.1 **Binding Effect.** City and OWNER AND DEVELOPER acknowledge and agree that the terms contained herein shall be binding upon and inure to the benefit of the City and the OWNER AND DEVELOPER and their respective successors, assigns, and transferees, and any subsidiary, affiliate or parent of the OWNER AND DEVELOPER (whether their interest is in the SUBJECT PROPERTY as a whole or in any portion or aspect thereof).

15.2 **Severability.** It is mutually understood and agreed that all agreements and covenants herein are severable and that in the event any of them shall be held to be invalid by any court of competent jurisdiction, this Agreement shall be interpreted as if such invalid agreement or covenant were not contained herein.

15.3 **Amendment.** The agreements, covenants, terms and conditions herein contained may be modified only through the written mutual consent of the Parties hereto.

15.4 **Intentionally omitted.**

15.5 **Choice of Law and Venue.** This Agreement shall in all respects be subject to and construed in accordance with and governed by the laws of the State of Illinois. Venue for any action arising out of the terms or conditions of this Agreement shall be proper only in the Circuit Court for the Eighteenth Judicial Circuit, DuPage County, Illinois.

15.6 **Ambiguity.** If any term of this Agreement is ambiguous, it shall not be construed for or against any Party on the basis that the Party did or did not write it.

15.7 **Recordation.** This Agreement will be recorded by the City with the office of the DuPage County Recorder.

15.8 **Term.** This Agreement shall be effective upon the Effective Date set forth in Section 15.15 hereof and shall terminate, without further action by either Party, upon the later of fifteen (15) years from the Effective Date or issuance of all final certificates of occupancy for the SUBJECT PROPERTY.

15.9 **Automatic Expiration.** If the final plat of subdivision for the SUBJECT PROPERTY is not recorded within five (5) years of the date of approval of the ordinance approving the final plat of subdivision and this Agreement by the City

Council, the final plat of subdivision and this Agreement shall automatically lapse and become null and void without further action by the City.

15.10 **Survival.** The terms and conditions set forth in the following paragraphs of this Agreement shall survive the expiration or termination of this Agreement: Sections 1 through 8 and each subsection thereof, Subsection 9.1, Section 10 and each subsection thereof, Subsection 11.1, Section 12 and each subsection thereof, Section 14, Subsections 15.1, 15.2, 15.5, 15.6, 15.10, and 15.13.

15.11 **Authority to Execute/OWNER AND DEVELOPER.** The undersigned warrants that he/she is the OWNER AND DEVELOPER of the SUBJECT PROPERTY, or is the duly authorized representative of the OWNER AND DEVELOPER of the SUBJECT PROPERTY in the case of a corporation, partnership, trust, or similar ownership form which owns the SUBJECT PROPERTY and that the undersigned has full power and authority to sign this document and voluntarily agrees to the provisions set forth herein.

15.12 **Authority to Execute/City**. The undersigned City Manager warrants that he has been directed to, and has the authority to, execute this Agreement. The undersigned City Clerk warrants that she has been directed to, and has the authority to, attest the signature of the City Manager on this Agreement.

15.13 **Exhibits.** All exhibits attached hereto or referenced herein, are incorporated herein by reference and made part hereof.

15.14 **Review of Declaration.** The City Attorney shall review and approve the Declaration for the Subject Property solely for the purpose of confirming conformity with the provisions set forth herein which approval shall not be unreasonably withheld.

15.15 **Effective Date.** The effective date of this Agreement ("**Effective Date**") shall be the date upon which it is fully executed by both Parties hereto.

/SIGNATURES ON FOLLOWING PAGES/

OWNER AND DEVELOPER/
M/I HOMES OF CHICAGO, LLC:

[Signature]

Rick Champine
[Printed name]

Division President, M/I Homes
[Title]

State of Illinois)
) ss
County of DuPage)

The foregoing instrument was acknowledged before me by Hannah C C Domino this 8 day of July 2025.

Notary Public

Hannah C C Domino
Print Name

Given under my hand and official seal this 8 day of July, 2025.

-Seal-

Notary Public
My Commission Expires: April 3, 2029

Official Seal
HANNAH C C DOMINO
Notary Public, State of Illinois
Commission No. 1007752
My Commission Expires April 3, 2029

EXHIBIT C

CITY OF NAPERVILLE

By: _____
Douglas A. Krieger
City Manager

ATTEST:

By: _____
Dawn C. Portner
City Clerk

Date: _____

LEGAL DESCRIPTION

ALL OF LOT 1 IN I.H.A. SUBDIVISION BEING A SUBDIVISION OF PART OF SECTION 5, TOWNSHIP 38 NORTH RANGE 10 EAST OF THE THIRD PRINCIPAL MERIDIAN. ACCORDING TO THE PLAT THEREOF RECORDED DECEMBER 10, 1982 AS DOCUMENT NO. R82-57652, EXCEPT THAT PART LOCATED IN "PARCEL B" CONVEYED TO CHRISTIANITY TODAY, INC. AND DESCRIBED AS FOLLOWS: THAT PART OF LOT 1 AND ALL OF LOT 2 IN I.H.A. SUBDIVISION, BEING A SUBDIVISION OF PART OF SECTION 5, TOWNSHIP 38 NORTH RANGE 10 EAST OF THE THIRD PRINCIPAL MERIDIAN, ACCORDING TO THE PLAT THEREOF RECORDED DECEMBER 10, 1982 AS DOCUMENT NO. R82-57652 DESCRIBED AS FOLLOWS: BEGINNING AT THE SOUTHEAST CORNER OF SAID LOT 1; THENCE SOUTH 88 DEGREES 39 MINUTES 02 SECONDS VEST, ALONG THE SOUTH LINE OF SAID LOT 1, A DISTANCE OF 133.98 FEET TO A LINE THAT IS 66.00 FEET EASTERLY, AS MEASURED PERPENDICULAR TO, OF THE WEST LINE OF SAID LOT 1; THENCE NORTH 00 DEGREES 07 MINUTES 00 SECONDS WEST, PARALLEL TO SAID WEST LINE OF LOT 1, A DISTANCE 470.00 FEET; THENCE NORTH 88 DEGREES 39 MINUTES 02 SECONDS EAST, PARALLEL TO THE SOUTH LINE OF SAID LOTS 1 AND 2, A DISTANCE OF 443.91 FEET TO THE NORTHWESTERLY LINE OF SAID LOT 2; THENCE NORTH 62 DEGREES IN 18 MINUTES 03 SECONDS EAST, ALONG SAID NORTHWESTERLY LINE OF LOT 2, A DISTANCE OF 285.41 FEET TO THE NORTHEAST CORNER OF SAID LOT 2; THENCE SOUTH 27 DEGREES 41 MINUTES 57 SECONDS EAST, ALONG THE NORTHEASTERLY LINE OF SAID LOT 2, A DISTANCE OF 665.74 FEET TO THE SOUTHEAST CORNER OF SAID LOT 2; THENCE SOUTH 88 DEGREES 39 MINUTES 02 SECONDS WEST, ALONG THE SOUTH LINE OF SAID LOT 2, A DISTANCE OF 871.28 FEET TO THE POINT OF BEGINNING BEING SITUATED IN THE VILLAGE OF NAPERVILLE, DUPAGE COUNTY, ILLINOIS.

PIN: 08-05-100-028

Commonly Known As: 1151 E. Warrenville Road, Naperville, Illinois 60563

EXHIBIT A

FINAL PLAT OF SUBDIVISION
OF
NORTHWOODS OF NAPERVILLE

BEING A PART OF SECTION 5, TOWNSHIP 38 NORTH RANGE 10 EAST OF THE THIRD PRINCIPAL MERIDIAN, DUPAGE COUNTY, ILLINOIS.

TOTAL AREA OF SUBDIVISION

530,509 SQUARE FEET OR 12.18 ACRES, MORE OR LESS.

SEE SHEET 3 FOR AREA DETAILS

PIN:
P.I.N.# 08-05-100-028
PROPERTY ADDRESS:
1151 E. WARRENVILLE ROAD
NAPERVILLE, IL 60563

LEGAL DESCRIPTION:
ALL OF LOT 1 IN I.H.A. SUBDIVISION BEING A SUBDIVISION OF PART OF SECTION 5, TOWNSHIP 38 NORTH RANGE 10 EAST OF THE THIRD PRINCIPAL MERIDIAN. ACCORDING TO THE PLAT THEREOF RECORDED DECEMBER 10, 1982 AS DOCUMENT NO. R82-57652, EXCEPT THAT PART LOCATED IN "PARCEL B" CONVEYED TO CHRISTIANITY TODAY, INC. AND DESCRIBED AS FOLLOWS:

THAT PART OF LOT 1 AND ALL OF LOT 2 IN I.H.A. SUBDIVISION, BEING A SUBDIVISION OF PART OF SECTION 5, TOWNSHIP 38 NORTH RANGE 10 EAST OF THE THIRD PRINCIPAL MERIDIAN, ACCORDING TO THE PLAT THEREOF RECORDED DECEMBER 10, 1982 AS DOCUMENT NO. R82-57652 DESCRIBED AS FOLLOWS: BEGINNING AT THE SOUTHEAST CORNER OF SAID LOT 1; THENCE SOUTH 88 DEGREES 39 MINUTES 02 SECONDS WEST, ALONG THE SOUTH LINE OF SAID LOT 1, A DISTANCE OF 133.98 FEET TO A LINE THAT IS 66.00 FEET EASTERLY, AS MEASURED PERPENDICULAR TO, OF THE WEST LINE OF SAID LOT 1; THENCE NORTH 00 DEGREES 07 MINUTES 00 SECONDS WEST, PARALLEL TO SAID WEST LINE OF LOT 1, A DISTANCE 470.00 FEET; THENCE NORTH 88 DEGREES 39 MINUTES 02 SECONDS EAST, PARALLEL TO THE SOUTH LINE OF SAID LOTS 1 AND 2, A DISTANCE OF 443.91 FEET TO THE NORTHWESTERLY LINE OF SAID LOT 2; THENCE NORTH 62 DEGREES 18 MINUTES 03 SECONDS EAST, ALONG SAID NORTHWESTERLY LINE OF LOT 2, A DISTANCE OF 285.41 FEET TO THE NORTHEAST CORNER OF SAID LOT 2; THENCE SOUTH 27 DEGREES 41 MINUTES 57 SECONDS EAST, ALONG THE NORTHEASTERLY LINE OF SAID LOT 2, A DISTANCE OF 665.74 FEET TO THE SOUTHEAST CORNER OF SAID LOT 2; THENCE SOUTH 88 DEGREES 39 MINUTES 02 SECONDS WEST, ALONG THE SOUTH LINE OF SAID LOT 2, A DISTANCE OF 871.28 FEET TO THE POINT OF BEGINNING BEING SITUATED IN THE VILLAGE OF NAPERVILLE, DUPAGE COUNTY, ILLINOIS.

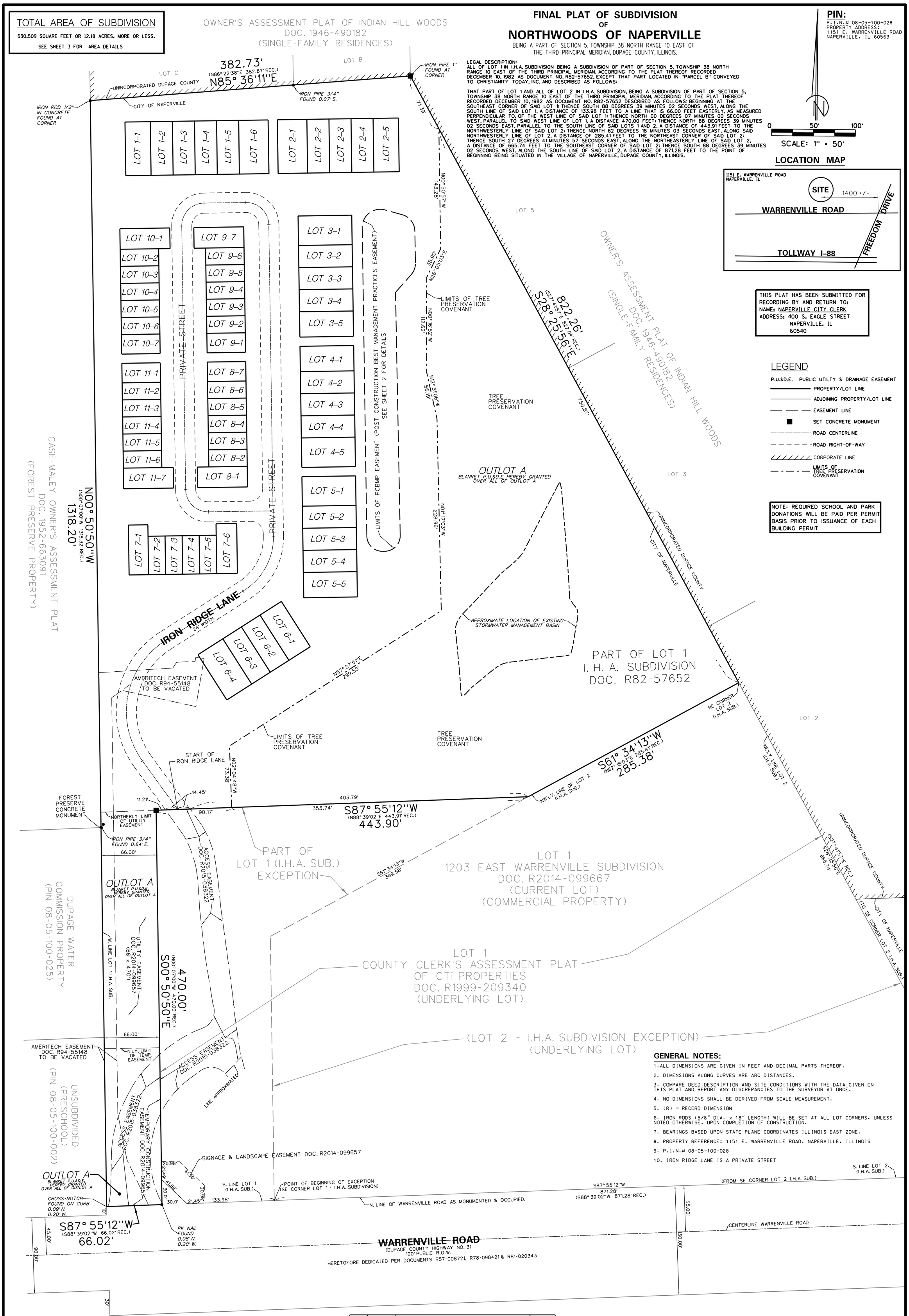

LOCATION MAP

THIS PLAT HAS BEEN SUBMITTED FOR RECORDING BY AND RETURN TO:
NAME: NAPERVILLE CITY CLERK
ADDRESS: 400 S. EAGLE STREET
NAPERVILLE, IL
60540

LEGEND

- P.U.&D.E. PUBLIC UTILTY & DRAINAGE EASEMENT
- PROPERTY/LOT LINE
- ADJOINING PROPERTY/LOT LINE
- EASEMENT LINE
- SET CONCRETE MONUMENT
- ROAD CENTERLINE
- ROAD RIGHT-OF-WAY
- CORPORATE LINE
- LIMITS OF TREE PRESERVATION COVENANT

NOTE: REQUIRED SCHOOL AND PARK DONATIONS WILL BE PAID PER PERMIT BASIS PRIOR TO ISSUANCE OF EACH BUILDING PERMIT

GENERAL NOTES:

1. ALL DIMENSIONS ARE GIVEN IN FEET AND DECIMAL PARTS THEREOF.
2. DIMENSIONS ALONG CURVES ARE ARC DISTANCES.
3. COMPARE DEED DESCRIPTION AND SITE CONDITIONS WITH THE DATA GIVEN ON THIS PLAT AND REPORT ANY DISCREPANCIES TO THE SURVEYOR AT ONCE.
4. NO DIMENSIONS SHALL BE DERIVED FROM SCALE MEASUREMENT.
5. (R) = RECORD DIMENSION
6. IRON RODS (5/8" DIA. x 18" LENGTH) WILL BE SET AT ALL LOT CORNERS, UNLESS NOTED OTHERWISE, UPON COMPLETION OF CONSTRUCTION.
7. BEARINGS BASED UPON STATE PLANE COORDINATES ILLINOIS EAST ZONE.
8. PROPERTY REFERENCE: 1151 E. WARRENVILLE ROAD, NAPERVILLE, ILLINOIS
9. P.I.N.# 08-05-100-028
10. IRON RIDGE LANE IS A PRIVATE STREET

CITY PROJECT NUMBER DEV-0055-2025

NO.	DATE		CHKD.
6	7-3-25	PER CITY COMMENTS	
5	6-19-25	PER CITY COMMENTS	
4	5-23-25	PER ATTORNEY COMMENTS	
3	4-18-25	TREE PRESERVATION AREA ADDED	
2	3-28-25	PER ATTORNEY COMMENTS	
1	12-19-24	PER CITY COMMENTS	

Thomson Surveying Ltd.
9575 W. Higgins Road, Suite 850
Rosemont, IL. 60018
TEL:(847)318-9790
FAX:(847)318-9792
wlutz@thomsonltd.com

CLIENT:
MI HOMES OF CHICAGO, LLC
CITY GATE LANE, SUITE 620
NAPERVILLE, ILLINOIS
60563

DSGN.		
DWN.	WJL	
CHKD.	DMS	
SCALE:	1" = 50'	
DATE:	11-6-24	

TITLE:
FINAL PLAT OF SUBDIVISION
NORTHWOODS OF NAPERVILLE
NAPERVILLE, ILLINOIS

PROJECT NO. 5689
SHEET 1 OF 3
DRAWING NO. 5689 PLAT OF SUB.DGN

EXHIBIT B

LOT & ROAD DETAIL SHEET

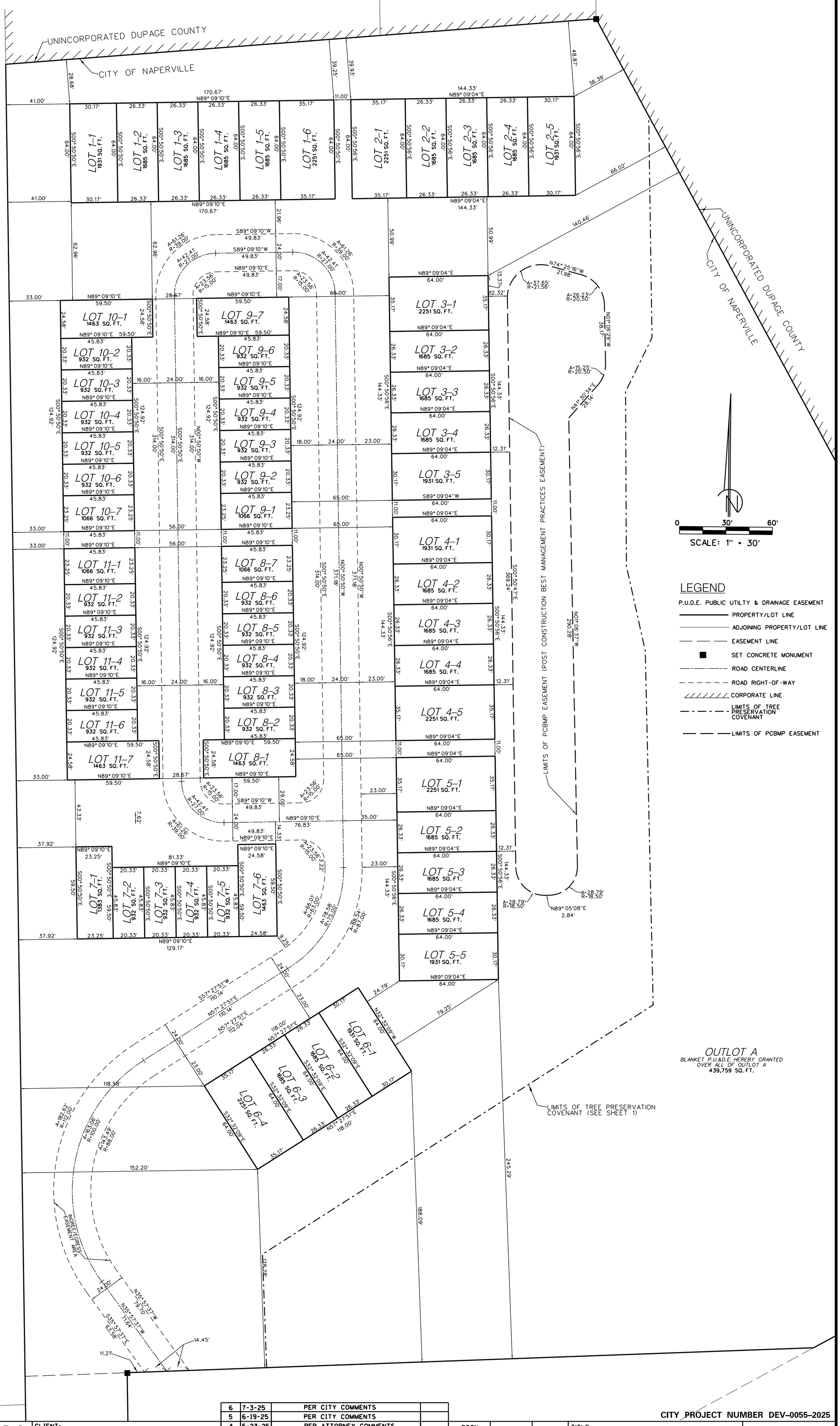

CITY PROJECT NUMBER DEV-0055-2025

Thomson Surveying Ltd.
9575 W. Higgins Road, Suite 850
Rosemont, IL. 60018
TEL:(847)318-9790
FAX:(847)318-9792
wlutz@thomsonltd.com

CLIENT:
MI HOMES OF CHICAGO, LLC
CITY GATE LANE, SUITE 620
NAPERVILLE, ILLINOIS
60563

NO.	DATE		CHKD.
6	7-3-25	PER CITY COMMENTS	
5	6-19-25	PER CITY COMMENTS	
4	5-23-25	PER ATTORNEY COMMENTS	
3	4-18-25	TREE PRESERVATION AREA	
2	3-28-25	PER ATTORNEY COMMENTS	
1	12-19-24	PER CITY COMMENTS	

DSGN.		
DWN.	WJL	
CHKD.	DMS	
SCALE:	1" = 30'	
DATE:	11-6-24	

TITLE:
FINAL PLAT OF SUBDIVISION
NORTHWOODS OF NAPERVILLE
NAPERVILLE, ILLINOIS

PROJECT NO. 5689
SHEET 2 OF 3
DRAWING NO. 5689 PLAT OF SUB.DGN

EXHIBIT B

FINAL PLAT OF SUBDIVISION
OF
NORTHWOODS OF NAPERVILLE

BEING A PART OF SECTION 5, TOWNSHIP 38 NORTH RANGE 10 EAST OF THE THIRD PRINCIPAL MERIDIAN, DUPAGE COUNTY, ILLINOIS.

PIN:
P.I.N.# 08-05-100-028

OWNER'S CERTIFICATE

STATE OF ILLINOIS)
) SS
COUNTY OF ____________)

THIS IS TO CERTIFY THAT ______________________________, IS THE OWNER OF THE PROPERTY DESCRIBED ABOVE AND AS SUCH OWNER, HAS CAUSED THE SAME TO BE PLATTED AS SHOWN HEREON, FOR THE USES AND PURPOSES THEREIN SET FORTH AND AS ALLOWED AND PROVIDED BY STATUTES, AND SAID OWNER, DOES HEREBY ACKNOWLEDGE AND ADOPT THE SAME UNDER THE STYLE AND TITLE AFORESAID.

DATED AT ______________, ILLINOIS, THIS ______ DAY OF _____________, 20____.
CITY DATE MONTH

BY: ____________________________ ATTEST: ________________________
SIGNATURE SIGNATURE

TITLE: __________________________ TITLE: __________________________
PRINT TITLE PRINT TITLE

NOTARY'S CERTIFICATE

STATE OF ______________)
) SS
COUNTY OF ____________)

I, ______________________________, A NOTARY PUBLIC IN AND FOR THE SAID COUNTY
PRINT NAME

IN THE STATE AFORESAID, DO HEREBY CERTIFY THAT __________________________,
PRINT NAME

_________________, AND ________________________________, _________________,
TITLE PRINT NAME TITLE

OF SAID OWNER, WHO ARE PERSONALLY KNOWN TO ME TO BE THE SAME PERSONS WHOSE NAMES ARE SUBSCRIBED TO THE FORGOING INSTRUMENT AS SUCH

___________________ AND _____________________ RESPECTFULLY, APPEARED
TITLE TITLE

BEFORE ME THIS DAY IN PERSON AND JOINTLY AND SEVERALLY ACKNOWLEDGED THAT THEY SIGNED AND DELIVERED THE SAID INSTRUMENT AS THEIR OWN FREE AND VOLUNTARY ACT AND AS THE FREE AND VOLUNTARY ACT OF SAID OWNER FOR THE USES AND PURPOSES THEREIN SET FORTH.

GIVEN UNDER MY HAND AND NOTARIAL SEAL

THIS ________ DAY OF _____________, 20___.
DATE MONTH

____
NOTARY PUBLIC SIGNATURE

____
PRINT NAME

MY COMMISSION EXPIRES ON ___________ _________, 20___.
MONTH DATE

SURVEYOR NOTES:

1. THE LAND IS WITHIN THE CITY OF NAPERVILLE WHICH HAS ADOPTED A CITY COMPREHENSIVE PLAN AND MAP AND IS EXERCISING THE SPECIAL POWERS AUTHORIZED BY DIVISION 12 OF ARTICLE 11 OF THE ILLINOIS MUNICIPAL CODE AS AMENDED.

2. HIS PROFESSIONAL SERVICE CONFORMS TO THE CURRENT ILLINOIS MINIMUM STANDARDS FOR A BOUNDARY SURVEY.

3. IRON RODS (5/8" DIA. x 18" LENGTH) WILL BE SET AT ALL LOT CORNERS, UNLESS NOTED OTHERWISE, UPON COMPLETION OF CONSTRUCTION.

4. NO PART OF THE PROPERTY COVERED BY THIS SUBDIVISION IS SITUATED WITHIN 500 FEET OF ANY SURFACE DRAIN OR WATER COURSE SERVING A TRIBUTARY AREA OF 640 ACRES OR MORE.

5. I HEREBY AUTHORIZE A REPRESENTATIVE FROM THE CITY OF NAPERVILLE THIS PLAT OF SUBDIVISION AT THE DUPAGE COUNTY RECORDER'S OFFICE.

SURVEYOR'S CERTIFICATE

STATE OF ILLINOIS)
) SS
COUNTY OF COOK)

THIS IS TO CERTIFY THAT WE, THOMSON SURVEYING LTD., ILLINOIS PROFESSIONAL DESIGN FIRM NUMBER 184-002768, IN THE STATE AND COUNTY AFORESAID HAVE SURVEYED, SUBDIVIDED AND PLATTED, THAT PART OF SECTION 5, TOWNSHIP 38 NORTH, RANGE 10 EAST OF THE THIRD PRINCIPAL MERIDIAN MORE PARTICULARLY DESCRIBED AS FOLLOWS:

ALL OF LOT 1 IN I.H.A. SUBDIVISION BEING A SUBDIVISION OF PART OF SECTION 5, TOWNSHIP 38 NORTH RANGE 10 EAST OF THE THIRD PRINCIPAL MERIDIAN. ACCORDING TO THE PLAT THEREOF RECORDED DECEMBER 10, 1982 AS DOCUMENT NO. R82-57652, EXCEPT THAT PART LOCATED IN "PARCEL B" CONVEYED TO CHRISTIANITY TODAY, INC. AND DESCRIBED AS FOLLOWS:

THAT PART OF LOT 1 AND ALL OF LOT 2 IN I.H.A. SUBDIVISION, BEING A SUBDIVISION OF PART OF SECTION 5, TOWNSHIP 38 NORTH RANGE 10 EAST OF THE THIRD PRINCIPAL MERIDIAN, ACCORDING TO THE PLAT THEREOF RECORDED DECEMBER 10, 1982 AS DOCUMENT NO. R82-57652 DESCRIBED AS FOLLOWS: BEGINNING AT THE SOUTHEAST CORNER OF SAID LOT 1; THENCE SOUTH 88 DEGREES 39 MINUTES 02 SECONDS WEST, ALONG THE SOUTH LINE OF SAID LOT 1, A DISTANCE OF 133.98 FEET TO A LINE THAT IS 66.00 FEET EASTERLY, AS MEASURED PERPENDICULAR TO, OF THE WEST LINE OF SAID LOT 1; THENCE NORTH 00 DEGREES 07 MINUTES 00 SECONDS WEST, PARALLEL TO SAID WEST LINE OF LOT 1, A DISTANCE 470.00 FEET; THENCE NORTH 88 DEGREES 39 MINUTES 02 SECONDS EAST, PARALLEL TO THE SOUTH LINE OF SAID LOTS 1 AND 2, A DISTANCE OF 443.91 FEET TO THE NORTHWESTERLY LINE OF SAID LOT 2; THENCE NORTH 62 DEGREES 18 MINUTES 03 SECONDS EAST, ALONG SAID NORTHWESTERLY LINE OF LOT 2, A DISTANCE OF 285.41 FEET TO THE NORTHEAST CORNER OF SAID LOT 2; THENCE SOUTH 27 DEGREES 41 MINUTES 57 SECONDS EAST, ALONG THE NORTHEASTERLY LINE OF SAID LOT 2, A DISTANCE OF 665.74 FEET TO THE SOUTHEAST CORNER OF SAID LOT 2; THENCE SOUTH 88 DEGREES 39 MINUTES 02 SECONDS WEST, ALONG THE SOUTH LINE OF SAID LOT 2, A DISTANCE OF 871.28 FEET TO THE POINT OF BEGINNING BEING SITUATED IN THE VILLAGE OF NAPERVILLE, DUPAGE COUNTY, ILLINOIS.

THE PLAT HEREON DRAWN CORRECTLY REPRESENTS SAID SURVEY. DIMENSIONS ARE GIVEN IN FEET AND DECIMAL PARTS THEREOF.

SAID PROPERTY CONTAINS CONTAINING 530,509 SQUARE FEET OR 12.18 ACRES, MORE OR LESS, AS SHOWN BY THE PLAT WHICH IS A CORRECT REPRESENTATION OF SAID SURVEY AND SUBDIVISION. IFURTHER CERTIFY THAT THE SAID PROPERTY WAS SURVEYED IN THE LAST 18 MONTHS. ALL DISTANCES ARE SHOWN IN FEET AND DECIMALS THEREOF. IFURTHER CERTIFY THAT ALL REGULATIONS ENACTED BY THE CITY BOARD RELATIVE TO PLATS AND SUBDIVISIONS HAVE BEEN COMPILED WITH IN THE PREPERATION OF THIS PLAT. THE PROPERTY INCLUDED IN THIS PLAT IS WITHIN THE CORPORAL LIMITS OF THE CITY OF NAPERVILLE, DUPAGE COUNTY, ILLINOIS.

ALSO, WE FURTHER CERTIFY THIS PROPERTY IS LOCATED IN ZONE X, AREA OF MINIMAL FLOOD HAZARD AS DETERMINED BY SCALE MEASUREMENT UPON THE FEDERAL EMERGENCY MANAGEMENT AGENCY'S FLOOD INSURANCE RATE MAP NO., 17043C0142J, EFFECTIVE MAP DATE OF: AUGUST 1, 2019

GIVEN UNDER MY HAND AND SEAL AT ROSEMONT, ILLINOIS
THIS X DAY OF JULY A.D., 2025

DRAFT COPY FOR REVIEW PURPOSES ONLY

WALTER J. LUTZ
ILLINOIS PROFESSIONAL LAND SURVEYOR NO. 035-003576
LICENSE EXPIRES: NOVEMBER 30, 2026
ILLINOIS PROFESSIONAL DESIGN FIRM NUMBER 184-002768
DESIGN FIRM LICENSE EXPIRES APRIL 30, 2027

WALTER J. LUTZ
3576
PROFESSIONAL
LAND
SURVEYOR
STATE OF
ILLINOIS
ROSEMONT, ILLINOIS

SCHOOL DISTRICT BOUNDARY STATEMENT

STATE OF ILLINOIS)
) SS
COUNTY OF DUPAGE)

BEING DULY SWORN, UPON HIS/HER OATH DEPOSES AND STATES AS FOLLOWS:

1. THE OWNER OF THE PROPERTY DESCRIBED ON THIS PLAT OF SUBDIVISION WHICH HAS BEEN SUBMITTED TO THE CITY OF NAPERVILLE FOR APPROVAL IS INCORPORATED HEREIN BY REFERENCE: AND

2. TO THE BEST OF OWNER'S KNOWLEDGE AND BELIEF, SAID SUBDIVISION LIES ENTIRELY WITHIN THE LIMITS OF COMMUNITY UNIT SCHOOL DISTRICT 203.

DATED THIS ___ DAY OF ______________________,20____.

M/I HOMES OF CHICAGO, LLC
2135 CITY GATE LANE
SUITE #620
NAPERVILLE, IL 60563

BY: ____________________ NAME: _____________

TITLE: ______________

CITY COUNCIL CERTIFICATE

STATE OF ILLINOIS)
) SS
COUNTY OF DU PAGE)

APPROVED AND ACCEPTED BY THE MAYOR AND CITY COUNCIL OF THE CITY OF NAPERVILLE, ILLINOIS, AT A MEETING HELD

THE ___________ DAY OF___________________, A.D., 20___.

BY: _________________________ ATTEST: ___________________
MAYOR CITY CLERK

POST CONSTRUCTION BEST MANAGEMENT PRACTICES EASMENT PROVISIONS

A POST CONSTRUCTION BEST MANAGEMENT PRACTICES EASEMENT IS HEREBY RESERVED FOR AND GRANTED BY THE OWNER OF THE SUBJECT PROPERTY TO THE CITY OF NAPERVILLE, ITS AGENTS, SUCCESSORS AND ASSIGNS, OR ANY OTHER GOVERNMENTAL ENTITY HAVING JURISDICTION OVER BEST MANAGEMENT PRACTICES FOR THE TREATMENT OF STORMWATER RUNOFF WITHIN THOSE AREAS OF THE SUBJECT PROPERTY DESIGNATED AND DEFINED ON THE SITE DEVELOPMENT PLAN AS "POST CONSTRUCTION BEST MANAGEMENT PRACTICES EASEMENT" OR "PCBMPE". THE GRANT OF SAID PCBMPE TO THE CITY OF NAPERVILLE SHALL INCLUDE THE RIGHT, PRIVILEGE, AND AUTHORITY TO ENFORCE AND EFFECT COMPLIANCE BY THE OWNER, OWNER'S SUCCESSORS AND ASSIGNS IN MAINTAINING, REPAIRING, REPLACING, AND REVEGETATING THE COMPONENT PARTS OF THE POST CONSTRUCTION BEST MANAGEMENT PRACTICES AS DEPICTED ON THE SITE DEVELOPMENT PLAN. MAINTENANCE FUNCTIONS BY OWNER MAY INCLUDE PERIODIC TRIMMING, CLEARING OF OBSTRUCTIONS, REMOVAL OF INVASIVE SPECIES, AND REPLANTING OF NATIVE PRAIRIE PLANT COMMUNITIES. NO BUILDINGS, STRUCTURES, EARTHEN FILL, OR OBSTRUCTIONS THAT WOULD RETARD THE FLOW OF STORMWATER, REDUCE THE STORAGE VOLUME ORIGINALLY PROVIDED, OR INTERFERE WITH THE FUNCTION OF THE POST CONSTRUCTION BEST MANAGEMENT PRACTICES SHALL BE UNDERTAKEN BY THE OWNER WITHOUT CONSENT OF THE CITY OF NAPERVILLE.

CITY TREASURER'S CERTIFICATE
STATE OF ILLINOIS)
) SS
COUNTY OF DU PAGE)
I, TREASURER FOR THE CITY OF NAPERVILLE, ILLINOIS, DO HEREBY CERTIFY THAT THERE ARE NO DELINQUENT OR UNPAID CURRENT OR FORFEITED SPECIAL ASSESSMENTS OR ANY DEFERRED INSTALLMENTS THEREOF THAT HAVE BEEN APPORTIONED AGAINST THE TRACT OF LAND INCLUDED IN THE ANNEXED PLAT.
DATED AT NAPERVILLE, ILLINOIS, THIS _____ DAY OF ____________, A.D., 20____.
____
CITY TREASURER / DIRECTOR, FINANCE DEPARTMENT

SURFACE WATER STATEMENT

STATE OF ILLINOIS)
)SS
COUNTY OF ___)

TO THE BEST OF OUR KNOWLEDGE AND BELIEF THE DRAINAGE OF SURFACE WATERS WILL NOT BE CHANGE BY THE CONSTRUCTION OF SUCH SUBDIVISION OR ANY PART THEREOF, OR, THAT IF SUCH SURFACE WATER DRAINAGE WILL BE CHANGED, REASONABLE PROVISION HAS BEEN MADE FOR COLLECTION AND DIVERSION OF SUCH SURFACE WATERS INTO PUBLIC AREAS, OR DRAINS WHICH THE SUBDIVIDER HAS A RIGHT TO USE, AND THAT SUCH SURFACE WATERS WILL BE PLANNED FOR IN ACCORDANCE'S WITH GENERALLY ACCEPTED ENGINEERING PRACTICES SO AS TO REDUCE THE LIKELIHOOD OF DAMAGE TO THE ADJOINING PROPERTY BECAUSE OF THE CONSTRUCTION OF THE SUBDIVISION.

DATED THIS _____ DAY OF __________, A.D., 20___.

____
ILLINOIS REGISTERED PROFESSIONAL ENGINEER

____
STATE REGISTRATION NUMBER

____
REGISTRATION EXPIRATION DATE

____
OWNER'S SIGNATURE

____
OWNER'S PRINTED NAME

DU PAGE COUNTY CLERK'S CERTIFICATE
STATE OF ILLINOIS)
) SS
COUNTY OF DU PAGE)
I, ____________________________, COUNTY CLERK OF DU PAGE COUNTY, ILLINOIS, DO HEREBY CERTIFY THAT THERE ARE NO DELINQUENT GENERAL TAXES, NO UNPAID CURRENT TAXES, NO UNPAID FORFEITED TAXES, AND NO REDEEMABLE TAX SALES AGAINST ANY OF THE LAND INCLUDED IN THE ANNEXED PLAT.
I, FURTHER CERTIFY THAT I HAVE RECEIVED ALL STATUTORY FEES IN CONNECTION WITH THE ANNEXED PLAT.
GIVEN UNDER MY HAND AND SEAL OF THE COUNTY CLERK AT WHEATON, ILLINOIS,
THIS_________DAY OF______________________, A.D., 20____.
____
COUNTY CLERK

DUPAGE COUNTY RECORDER'S CERTIFICATE
STATE OF ILLINOIS)
) SS
COUNTY OF DU PAGE)
THIS INSTRUMENT____________________________, WAS FILED FOR RECORD IN THE RECORDER'S OFFICE OF DU PAGE COUNTY, ILLINOIS,
ON THE _________________ DAY OF _____________________, A.D., 20_____
AT________O'CLOCK____M.
____
RECORDER OF DEEDS

DUPAGE COUNTY PUBLIC WORKS CERTIFICATE
STATE OF ILLINOIS)
) SS
COUNTY OF DU PAGE)
I, _____________________________, SUPERINTENDENT OF THE COUNTY OF DUPAGE DEPARTMENT OF PUBLIC WORKS & OPERATIONS, DO HEREBY CERTIFY THAT THIS SUBDIVISION PLAT, AND THE PLANS AND SPECIFICATIONS FOR THE IMPROVEMENTS THEREOF, MEET THE REQUIREMENTS OF THE COUNTY OF DUPAGE DEPARTMENT OF PUBLIC WORKS.

DATED THIS _________________ DAY OF _____________________, A.D., 20_____

____
SUPERINTENDENT

DUPAGE COUNTY ENGINEER CERTIFICATE

STATE OF ILLINOIS)
) SS
COUNTY OF DU PAGE)

APPROVED BY THE DU PAGE COUNTY DIVISION OF TRANSPORTATION

THIS__________DAY OF______________________, A.D., 20_____.

____
COUNTY ENGINEER

TREE PRESERVATION COVENANT

OWNER HEREBY ESTABLISHES A TREE PRESERVATION COVENANT (OR COVENANT) OVER THAT PART OF THE PROPERTY HEREIN IDENTIFIED AS TREE PRESERVATION COVENANT (THE COVENANT AREA). THE PURPOSE OF THIS TREE PRESERVATION COVENANT IS TO MAINTAIN A TREE CANOPY, PROTECT THE ENVIRONMENT, AND PRESERVE PROPERTY VALUES. THIS TREE PRESERVATION COVENANT SHALL RUN TO THE BENEFIT OF THE NORTHWOODS OF NAPERVILLE HOMEOWNERS' ASSOCIATION AND TO THE CITY OF NAPERVILLE (THE CITY).

NO TREES MAY BE REMOVED FROM THE COVENANT AREA WITHOUT COMPLIANCE WITH THE PROVISIONS OF THIS COVENANT, THE TREE PRESERVATION PLAN REFERENCED HEREIN, AND THE PROVISIONS OF THE NAPERVILLE MUNICIPAL CODE THEN IN EFFECT. THE OWNERS OF INDIVIDUAL PROPERTIES AND THE NORTHWOODS OF NAPERVILLE HOMEOWNERS' ASSOCIATION SHALL TAKE ALL REASONABLE STEPS TO PREVENT TREES WITHIN THE COVENANT AREA FROM DAMAGE OR DESTRUCTION.

CONCURRENT WITH THE APPROVAL OF THE DEVELOPMENT OF NORTHWOODS OF NAPERVILLE, THE CITY HAS APPROVED A LANDSCAPING PLAN WHICH INCLUDES A TREE PRESERVATION PLAN. THE TREE PRESERVATION PLAN ALLOWS REMOVAL OF CERTAIN TREES WITHIN THE COVENANT AREA.

CITY APPROVAL OF FUTURE TREE REMOVALS SHALL NOT BE CONDITIONED OR DELAYED IF: (1) THE CITY FORESTER DETERMINES (IN WRITING) THAT: (i) REMOVAL OF THE TREE IS NECESSARY DUE TO A SAFETY HAZARD TO PEDESTRIAN OR VEHICULAR TRAFFIC OR THREATENS TO CAUSE DISRUPTION OF PUBLIC SAFETY; (ii) REMOVAL OF THE TREE IS NECESSARY DUE TO A SAFETY HAZARD TO STRUCTURES; OR (iii) REMOVAL OF THE TREE IS NECESSARY DUE TO DEATH OR DISEASE OF THE TREE OR BECAUSE THE TREE HAS BEEN SUBSTANTIALLY WEAKENED BY AGE, STORM, FIRE OR OTHER INJURY THAT RESULTS IN ITS BEING A DANGER TO PERSON OR PROPERTY, (iv) REMOVAL OF INVASIVE SPECIES OR TREES/BRUSH THAT SHOULD OTHERWISE BE REMOVED BASED ON BEST FORESTRY PRACTICES OR (v) REMOVAL OF THE TREE IS NECESSARY IN ORDER TO ALLOW MAINTENANCE, REPAIR, OR RECONSTRUCTION OF THE STORMWATER MANAGEMENT BASIN; AND (2) IF THE CITY FORESTER FURTHER DETERMINES THAT THE CONDITIONS LISTED ABOVE CANNOT BE REMEDIED BY PROPER TREE PRUNING TECHNIQUES ALONE OR BY OTHER MEANS DEEMED REASONABLY APPROPRIATE BY THE CITY FORESTER.

THIS TREE PRESERVATION COVENANT IS NOT INTENDED TO DIRECT THE MANNER IN WHICH THE AREA ENCUMBERED BY THE TREE PRESERVATION COVENANT IS MAINTAINED. THE NORTHWOODS OF NAPERVILLE HOMEOWNERS' ASSOCIATION MAY ELECT TO LEAVE THE AREA OF THE TREE PRESERVATION COVENANT IN ITS NATURAL STATE OR MAY ELECT TO ACTIVELY MANAGE THE AREA OF THE TREE PRESERVATION COVENANT, IN ITS SOLE AND ABSOLUTE DISCRETION.

A VIOLATION OF THIS COVENANT SHALL BE PUNISHABLE BY A FINE, PAYABLE TO THE CITY OF NAPERVILLE, IN THE AMOUNT OF $5,000.00 FOR EACH TREE REMOVED IN VIOLATION HEREOF. IN THE EVENT A TREE IN THE COVENANT AREA IS REMOVED IN A MANNER THAT IS NOT COMPLIANT WITH THIS COVENANT, THE HOMEOWNER OR THE HOMEOWNER'S ASSOCIATION, AS MAY BE APPLICABLE, SHALL BE RESPONSIBLE FOR REPLACEMENT OF THE TREE. REPLACEMENT OF TREE(S) REMOVED IN A MANNER NOT COMPLIANT WITH THIS COVENANT SHALL BE IN ACCORD WITH THE TREE PRESERVATION PROVISIONS SET FORTH IN THE NAPERVILLE MUNICIPAL CODE THEN IN EFFECT UNLESS A DIFFERENT APPROACH IS APPROVED IN WRITING BY THE CITY FORESTER, AND SHALL BE EITHER THE SAME SPECIES AS WAS REMOVED OR, WITH THE CONSENT OF THE CITY FORESTER, A SUITABLE ALTERNATIVE.

BLANKET PUBLIC UTILITY & DRAINAGE EASEMENT PROVISIONS

A NON-EXCLUSIVE PERPETUAL EASEMENT IS HEREBY RESERVED FOR AND GRANTED OVER OUTLOT A (HEREINAFTER "EASEMENT") TO THE CITY OF NAPERVILLE, ILLINOIS, AND TO THOSE PUBLIC UTILITY COMPANIES OPERATING UNDER FRANCHISE OR AGREEMENT FROM THE CITY OF NAPERVILLE, AND THEIR SUCCESSORS AND ASSIGNS, FOR THE PERFORMANCE OF MUNICIPAL AND OTHER GOVERNMENTAL SERVICES, INCLUDING BUT NOT LIMITED TO THE PERPETUAL RIGHT, PRIVILEGE AND AUTHORITY TO SURVEY, CONSTRUCT, RECONSTRUCT, INSTALL, REPAIR, INSPECT, REMOVE, EXCHANGE, TEST, REPLACE, MAINTAIN AND OPERATE VARIOUS UTILITY TRANSMISSION AND DISTRIBUTION SYSTEMS, WATER AND STORM, TOGETHER WITH ANY AND ALL NECESSARY MANHOLES, CATCH BASINS, CONNECTIONS, APPLIANCES AND OTHER STRUCTURES AND APPURTENANCES AS MAY BE DEEMED NECESSARY BY SAID CITY, OVER, UPON, UNDER AND THROUGH SAID EASEMENT, AND FOR THE RIGHT TO READ, EXAMINE, INSPECT, INSTALL, OPERATE, MAINTAIN, EXCHANGE, REMOVE, REPAIR, TEST, AND/OR REPLACE CITY OWNED UTILITY EQUIPMENT AND METERS, TOGETHER WITH THE RIGHT OF ACCESS ACROSS THE GRANTORS PROPERTY FOR NECESSARY PERSONNEL AND EQUIPMENT TO DO ANY OF THE ABOVE WORK.

THE RIGHT IS ALSO GRANTED TO THE CITY AND ITS AGENTS TO TRIM OR REMOVE ANY TREES, SHRUBS OR OTHER PLANTS ON THE EASEMENT THAT INTERFERE WITH THE REASONABLE USE OF SAID EASEMENT. NO PERMANENT BUILDINGS SHALL BE PLACED ON SAID EASEMENT, BUT SAME MAY BE USED FOR GARDENS, SHRUBS, LANDSCAPING, PRIVATE ROADS, DRIVEWAYS, RETAINING WALLS AND OTHER PURPOSES THAT ARE CONSISTENT WITH THE ENGINEERING AND LANDSCAPE PLANS ASSOCIATED WITH THE DEVELOPMENT OF THE PROPERTY THAT DO NOT THEN OR LATER INTERFERE WITH THE AFORESAID USES OR RIGHTS.

ALL CONSTRUCTION OR OTHER WORK PERFORMED BY ANY PERSON OR ENTITY WITHIN THE EASEMENT HEREBY GRANTED SHALL BE PERFORMED IN ACCORDANCE WITH THE VARIOUS REQUIREMENTS OF THE ORDINANCES, CODE AND REGULATIONS OF THE CITY OF NAPERVILLE AND ALL OTHER APPLICABLE LAW.

INGRESS/EGRESS PROVISIONS

A NON-EXCLUSIVE EASEMENT FOR INGRESS AND EGRESS IS HEREBY RESERVED AND GRANTED TO ALL PRESENT AND FUTURE OWNERS OF LOTS 1-1 to 6-4, THEIR MORTGAGEES, LESSEES, INVITEES, SUCCESSORS AND ASSIGNS, TO THE CITY OF NAPERVILLE, AND TO THOSE PUBLIC UTILITY COMPANIES OPERATING UNDER THE FRANCHISE OR AGREEMENT FROM THE CITY OF NAPERVILLE, OVER THAT PART OF OUTLOT A LABELED AS INGRESS/EGRESS EASEMENT AREA. THE INGRESS/EGRESS EASEMENT SHALL BE SUBJECT TO SUCH ADDITIONAL OBLIGATIONS, TERMS, AND RESTRICTIONS AS MAY BE SET FORTH IN THE HOMEOWNERS DECLARATION THAT WILL GOVERN THE DEVELOPMENT AND USE OF THE PROPERTY.

NOTE: THE PRESENCE OF ON-SITE WETLAND, BUFFERS, FLOODPLAINS, AND PCBMPS WITH A DRAINAGE AREA OF 1 ACRE OR GREATER, SHALL BE RECORDED AGAINST THE TITLE TO ALERT ALL FUTURE OWNERS AND SHALL REFERENCE THE STORMWATER MANAGEMENT CERTIFICATION NUMBER (15-47.C OF DCSFPO).

AREA SUMMARY TABLE

LOT 1-1	1931 S.F.	LOT 7-6	1463 S.F.
LOT 1-2	1685 S.F.	LOT 8-1	1463 S.F.
LOT 1-3	1685 S.F.	LOT 8-2	932 S.F.
LOT 1-4	1685 S.F.	LOT 8-3	932 S.F.
LOT 1-5	1685 S.F.	LOT 8-4	932 S.F.
LOT 1-6	2251 S.F.	LOT 8-5	932 S.F.
LOT 2-1	2251 S.F.	LOT 8-6	932 S.F.
LOT 2-2	1685 S.F.	LOT 8-7	1066 S.F.
LOT 2-3	1685 S.F.	LOT 9-1	1066 S.F.
LOT 2-4	1685 S.F.	LOT 9-2	932 S.F.
LOT 2-5	1931 S.F.	LOT 9-3	932 S.F.
LOT 3-1	2251 S.F.	LOT 9-4	932 S.F.
LOT 3-2	1685 S.F.	LOT 9-5	932 S.F.
LOT 3-3	1685 S.F.	LOT 9-6	932 S.F.
LOT 3-4	1685 S.F.	LOT 9-7	1463 S.F.
LOT 3-5	1931 S.F.	LOT 10-1	1463 S.F.
LOT 4-1	1931 S.F.	LOT 10-2	932 S.F.
LOT 4-2	1685 S.F.	LOT 10-3	932 S.F.
LOT 4-3	1685 S.F.	LOT 10-4	932 S.F.
LOT 4-4	1685 S.F.	LOT 10-5	932 S.F.
LOT 4-5	2251 S.F.	LOT 10-6	932 S.F.
LOT 5-1	2251 S.F.	LOT 10-7	1066 S.F.
LOT 5-2	1685 S.F.	LOT 11-1	1066 S.F.
LOT 5-3	1685 S.F.	LOT 11-2	932 S.F.
LOT 5-4	1685 S.F.	LOT 11-3	932 S.F.
LOT 5-5	1931 S.F.	LOT 11-4	932 S.F.
LOT 6-1	1931 S.F.	LOT 11-5	932 S.F.
LOT 6-2	1685 S.F.	LOT 11-6	1463 S.F.
LOT 6-3	1685 S.F.		
LOT 6-4	2251 S.F.		
LOT 7-1	1383 S.F.		
LOT 7-2	932 S.F.		
LOT 7-3	932 S.F.		
LOT 7-4	932 S.F.		
LOT 7-5	932 S.F.		

TOTAL OF TOWNHOME LOTS 90,747 S.F., MORE OR LESS

OUTLOT A 439,762 S.F., MORE OR LESS

TOTAL = 530,509 S.F. OR 12.18 ACRES, MORE OR LESS

UPON RECORDING MAIL TO:
CITY OF NAPERVILLE
400 S. EAGLE STREET
NAPERVILLE, IL 60540

PREPARED FOR:
M/I HOMES OF CHICAGO, LLC
2135 CITY GATE LANE, SUITE 620
NAPERVILLE, IL 60563

SEND TAX BILL TO:
M/I HOMES OF CHICAGO, LLC
2135 CITY GATE LANE, SUITE 620
NAPERVILLE, IL 60563

PROJECT NO.	5689
SHEET	3 OF 3
DRAWING NO.	5689 PLAT OF SUB.DGN

TITLE: FINAL PLAT OF SUBDIVISION NORTHWOODS OF NAPERVILLE NAPERVILLE, ILLINOIS

DSGN.	
DWN.	WJL
CHKD.	DWS
SCALE:	40'
DATE:	11-1-24

NO.	DATE	NATURE OF REVISION	CHKD.
6	7-3-25	PER CITY COMMENTS	
5	6-19-25	PER CITY COMMENTS	
4	5-23-25	PER ATTORNEY COMMENTS	
3	4-18-25	TREE PRESERVATION AREA ADDED	
2	3-28-25	PER ATTORNEY COMMENTS	
1	12-19-24	PER CITY COMMENTS	

CLIENT: M/I HOMES OF CHICAGO, LLC 2135 CITY GATE LANE, SUITE 620 NAPERVILLE, IL 60563

Thomson Surveying Ltd.
9575 W. Higgins Road, Suite 850
Rosemont, IL. 60018
TEL:(847)318-9790
FAX:(847)318-9792
wlutz@thomsonltd.com

EXHIBIT B

FINAL ENGINEERING FOR

NORTHWOODS OF NAPERVILLE

1151 WARRENVILLE ROAD, NAPERVILLE, IL 60563

Sheet List Table

Sheet Number	Sheet Title	Sheet Description
1	Cover Sheet	C0.0
2	General Notes & Specifications	C0.1
3	Existing Conditions & Demolition Plan	C1.0
4	Site Dimensional & Paving Plan	C2.0
5	Detailed Site Dimensional & Paving Plan	C2.1
6	Detailed Site Dimensional & Paving Plan	C2.2
7	Grading & Drainage Plan	C3.0
8	Detailed Grading & Drainage Plan	C3.1
9	Detailed Grading & Drainage Plan	C3.2
10	Soil Erosion Control Plan	C4.0
11	Soil Erosion Control Details	C4.1
12	Utility Plan	C5.0
13	Detailed Utility Plan	C5.1
14	Detailed Utility Plan	C5.2
15	Entrance Road Plan & Profile	C6.0
16	Sanitary Plan & Profile	C7.0
17	Sanitary Plan & Profile	C7.1
18	Sanitary Plan & Profile	C7.2
19	Sanitary Plan & Profile	C7.3
20	Sanitary Plan & Profile	C7.4
21	Sanitary Plan & Profile	C7.5
22	Sanitary Plan & Profile	C7.6
23	Construction Details	C8.0
24	Construction Details	C8.1
25	Construction Details	C8.2
26	Construction Details	C8.3
27	Construction Details	C8.4
28	Construction Details	C8.5
29	Construction Details	C8.6

LOCATION MAP

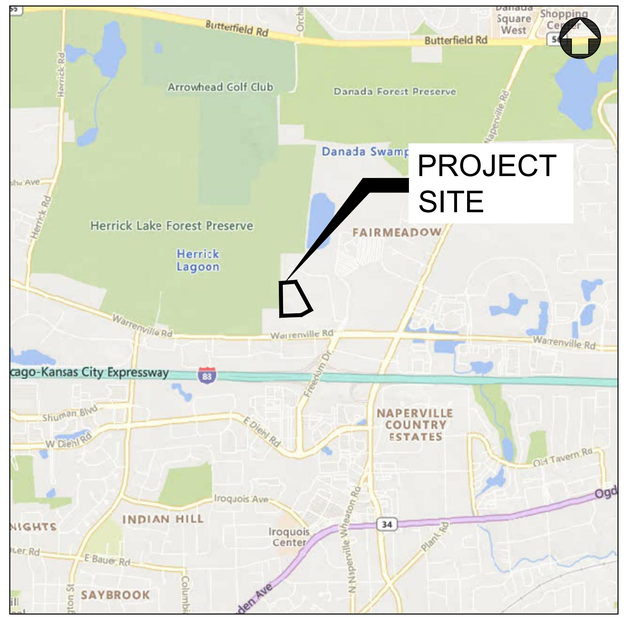

SECTION 5, TOWNSHIP 38N, RANGE 10E

EXISTING LEGEND

- EXISTING TREE
- CURB & GUTTER
- EXISTING BUILDING
- PCC SIDEWALK
- GAS SERVICE
- ELECTRIC SERVICE
- STORM SEWER
- SANITARY SEWER
- WATER MAIN
- CABLE LINE
- OVERHEAD UTILITY LINE
- COMMUNICATION LINE
- FIBER OPTIC LINE
- FENCE
- STORM STRUCTURE
- SANITARY MANHOLE
- CLEANOUT
- WATER METER
- VALVE VAULT
- VALVE BOX
- HYDRANT
- GAS METER
- ELECTRIC METER
- PARKING LOT LIGHT
- UTILITY POLE
- GUY WIRE
- TRANSFORMER
- FIBER OPTIC BOX
- FIBER OPTIC PEDESTAL
- CABLE PEDESTAL
- PHONE PEDESTAL
- ELECTRIC PEDESTAL
- MAJOR CONTOUR
- MINOR CONTOUR

PROPOSED LEGEND

- CURB & GUTTER
- REVERSE PITCH CURB & GUTTER
- DEPRESSED CURB & GUTTER
- PROPOSED BUILDING
- PCC SIDEWALK
- STANDARD DUTY PAVEMENT
- HEAVY DUTY PAVEMENT
- GAS SERVICE
- ELECTRIC SERVICE
- STORM SEWER
- SANITARY SEWER
- WATER MAIN
- FENCE
- STORM STRUCTURE
- DOWNSPOUT CONNECTION
- SANITARY MANHOLE
- CLEANOUT
- WATER METER
- VALVE VAULT
- VALVE BOX
- HYDRANT
- GAS METER
- ELECTRIC METER
- ELECTRIC TRANSFORMER
- ELECTRIC HANDHOLE
- PARKING LOT LIGHT
- FLOW ARROW
- OVERLAND FLOOD ROUTE
- 100.00 TW TOP OF SIDEWALK GRADE
- 100.00 TC TOP OF CURB GRADE
- 100.00 P PAVEMENT GRADE
- 100.00 G GROUND GRADE
- MAJOR CONTOUR
- MINOR CONTOUR

BENCHMARK INFORMATION
SOURCE BENCHMARK:
DUPAGE COUNTY 0167
NGS PID: DK3215
(BRASS DISC)
ELEVATION: 759.889 (NAVD 88')
(N 41° 48.535 W 088° 08.335)

CONTACTS

DEVELOPER	ENGINEER	SURVEYOR
M/I HOMES OF CHICAGO, LLC	CAGE ENGINEERING, INC.	THOMSON SURVEYING, LTD.
SCOTT BARENBRUGGE	FREDERICK W. THAETE, P.E.	WALTER LUTZ, P.L.S.
2135 CITY GATE LN, STE 620	2200 CABOT DR, STE 325	9575 W HIGGINS RD, STE 850
NAPERVILLE, IL 60563	LISLE, IL 60532	ROSEMONT, IL 60018
630.328.2716	630.598.0007	847.318.9790

Know what's below. Call before you dig.

Call Before You Dig. JULIE ILLINOIS ONE-CALL SYSTEM

EXHIBIT C

2200 CABOT DRIVE
SUITE 325
LISLE, IL 60532
P: 630.598.0007
WWW.CAGECIVIL.COM
CAGE CIVIL ENGINEERING

FREDERICK W. THAETE
062-055840
LICENSED PROFESSIONAL ENGINEER OF ILLINOIS
EXP. 11/30/2025

REVISIONS

3 06/25/2025 CITY RESUBMITTAL
2 05/23/2025 CITY RESUBMITTAL

THIS DESIGN AND THESE DRAWINGS ARE THE PROPERTY OF CAGE ENGINEERING, INC. NO PART OF THIS WORK MAY BE REPRODUCED WITHOUT THE PRIOR WRITTEN PERMISSION FROM CAGE ENGINEERING, INC.

M/I HOMES OF CHICAGO, LLC
NORTHWOODS OF NAPERVILLE
1151 WARRENVILLE ROAD
NAPERVILLE, IL 60563

PROJ NO: 240255
ENG : DJB
DATE : 07/07/2025

SHEET TITLE
COVER SHEET

SHEET NUMBER
C0.0
1 OF 32

GENERAL REQUIREMENTS:

1. ALL WORK SHALL BE IN CONFORMANCE WITH THE APPLICABLE SECTIONS OF THE ILLINOIS DEPARTMENT OF TRANSPORTATION (IDOT) "STANDARD SPECIFICATIONS FOR ROAD AND BRIDGE CONSTRUCTION" (HEREIN AFTER REFERRED TO AS STANDARD SPECIFICATIONS) ADOPTED JANUARY 1, 2022 AND SUPPLEMENTAL SPECIFICATIONS. WITHIN THE STANDARD SPECIFICATIONS, ARTICLES 105.01, 105.09, 105.10, 105.11, 105.12, 105.13 AND SECTION 109 SHALL NOT BE INCORPORATED INTO THIS CONTRACT.
2. SCOPE OF WORK: THE PROPOSED IMPROVEMENTS CONSIST OF SUPPLYING ALL THE NECESSARY LABOR, MATERIAL AND EQUIPMENT TO SATISFACTORILY CONSTRUCT AND INSTALL ALL IMPROVEMENTS ACCORDING TO THE PLANS DESIGNATED HEREIN.
3. CONTRACTOR SHALL HAVE THE RESPONSIBILITY TO LOCATE AND PROTECT ALL UNDERGROUND FACILITIES/UTILITIES DURING CONSTRUCTION OPERATIONS AS OUTLINED IN ARTICLE 107.31 OF THE STANDARD SPECIFICATIONS AND CONTACT THE OWNER. ANY DAMAGE TO ANY UTILITIES SHALL BE PROMPTLY REPORTED TO THE OWNER. REPAIRS SHALL BE THE RESPONSIBILITY OF THE CONTRACTOR. THE UNDERGROUND UTILITIES SHOWN HEREIN ARE APPROXIMATE AND BASED ON THE ACTUAL LOCATION OF SURFACE STRUCTURES AND PLANS PROVIDED BY THE OWNER. THE IMPLIED PRESENCE OR ABSENCE OF UTILITIES IS NOT TO BE CONSTRUED BY THE OWNER, ENGINEER, CONTRACTOR, OR SUBCONTRACTORS TO BE AN ACCURATE AND COMPLETE REPRESENTATION OF UTILITIES THAT MAY OR MAY NOT EXIST ON THE CONSTRUCTION SITE. BURIED AND ABOVE GROUND UTILITY LOCATION, IDENTIFICATION, AND MARKING IS THE SOLE RESPONSIBILITY OF THE CONTRACTOR. REROUTING, DISCONNECTION, PROTECTION, ETC. OF ANY UTILITIES MUST BE COORDINATED BETWEEN THE CONTRACTOR, UTILITY COMPANY, AND OWNER. SITE SAFETY, INCLUDING THE AVOIDANCE OF HAZARDS ASSOCIATED WITH BURIED AND ABOVEGROUND UTILITIES REMAINS THE SOLE RESPONSIBILITY OF THE CONTRACTOR. THE CONTRACTOR SHALL BE RESPONSIBLE FOR PROTECTING UTILITY PROPERTY FROM CONSTRUCTION OPERATIONS.
4. THE CONTRACTOR SHALL FURNISH, ERECT, AND MAINTAIN MARKINGS AND ASSOCIATED HAZARD WARNING LIGHTS, DELINEATOR FENCE, AND OTHER ASSOCIATED FACILITIES AS REQUIRED FOR OPEN TRENCHES, EXCAVATIONS, TEMPORARY STOCK PILES, AND PARKED CONSTRUCTION EQUIPMENT THAT MAY POSE A POTENTIAL HAZARD AS PART OF THE DAILY OPERATIONS AT THIS SITE. CONTRACTOR IS SOLELY RESPONSIBLE FOR SITE SAFETY.
5. CONTRACTOR SHALL CONTINUOUSLY COMPARE ALL LINES, GRADES, AND OTHER INFORMATION APPEARING ON THE PLANS WITH THE ACTUAL LINES, GRADES, AND SITE CONDITIONS. ANY DISCREPANCIES THAT MAY AFFECT THE PERFORMANCE OF THE WORK IN ACCORDANCE WITH THE INTENT OF THE CONTRACT DOCUMENTS SHALL BE IMMEDIATELY REPORTED TO THE OWNER AND ENGINEER IN WRITING FOR DISPOSITION BEFORE CONTRACTOR PROCEEDS WITH THE WORK. CONTRACTOR SHALL HAVE FULL RESPONSIBILITY FOR THE WORK COMPLETED PRIOR TO THE REPORT TO THE OWNER AND ENGINEER, AND NO ADDITIONAL COMPENSATION WILL BE ALLOWED FOR CORRECTION OF THE WORK PRIOR TO THE REPORT TO THE OWNER AND ENGINEER.
6. CONTRACTOR PARKING AND LAYDOWN AREAS SHALL BE COORDINATED WITH THE OWNER.
7. PRIOR TO PERFORMING ANY WORK IN OR ON THE RIGHT OF WAY OF ANY CITY OR STATE ROADWAY, THE CONTRACTOR SHALL NOTIFY THE CITY / STATE TRAFFIC ENGINEER'S OFFICE. THE CONTRACTOR SHALL ERECT WARNING SIGNS AND BARRICADES TO PROTECT THE TRAVELING PUBLIC AND HIS WORKERS. THE SIGNING AND BARRICADING SHALL CONFORM TO THE APPROPRIATE APPLICATIONS OUTLINED IN THE MANUAL OF UNIFORM TRAFFIC CONTROL DEVICES OR AS OTHERWISE DIRECTED BY THE CITY / STATE TRAFFIC ENGINEER. IF PERMITS ARE REQUIRED TO CONDUCT THE WORK, THE CONTRACTOR SHALL SECURE THE PERMITS AND SUPPLY THEM TO THE OWNER AT NO ADDITIONAL COST. ALL FULL WIDTH LANE CLOSURES, PARTIAL LANE CLOSURES, AND CONSTRUCTION ADJACENT TO PAVEMENT SHALL BE IDENTIFIED, SIGNED, AND BARRICADES ERECTED IN CONFORMANCE WITH THE APPLICABLE ARTICLES OF SECTION 701 OF THE STANDARD SPECIFICATIONS AND THE MUNICIPALITY'S REQUIREMENTS. ALL TRAFFIC PROTECTION, BOTH ONSITE AND OFFSITE, SHALL BE CONSIDERED INCIDENTAL TO THE CONTRACT.
8. CONTRACTOR SHALL REMOVE EARTHEN MATERIALS, EXISTING SURFACES, AND STRUCTURES AS REQUIRED. ALL WASTE MATERIAL SHALL BE PROPERLY DISPOSED OFF-SITE AND SHALL BE INCIDENTAL TO THE CONTRACT.
9. THE CONTRACTOR IS RESPONSIBLE FOR OBTAINING ALL NECESSARY PERMITS, UNLESS NOTED. THIS WILL INCLUDE BUT NOT BE LIMITED TO MUNICIPAL BUILDING PERMIT. THE OWNER WILL SECURE THE N.P.D.E.S. PERMIT. THE CONTRACTOR SHALL PROVIDE ANY FINANCIAL SURETIES REQUIRED AS PART OF ANY PERMIT.
10. WHEN CONCRETE IS PLACED ABUTTING STRUCTURES, FOUNDATIONS OR EXISTING SIDEWALKS, A BOND BREAKER CONSISTING OF 1" P.J.F. AND ELASTOMERIC JOINT SEALANT SHALL BE USED FULL DEPTH UNLESS OTHERWISE NOTED.
11. MAXIMUM CONTRACTION JOINT SPACING ON CONCRETE CURB AND GUTTER OR CONCRETE GUTTER SHALL NOT EXCEED 25'.
12. SIDEWALK RAMPS FOR ADA SHALL BE IN ACCORDANCE WITH THE DETAILS SHOWN HEREIN. DETECTABLE WARNINGS SHALL BE IN ACCORDANCE WITH THE STANDARD SPECIFICATIONS.
13. HOT-MIX ASPHALT PAVEMENT PATCHING SHALL BE IN ACCORDANCE WITH SECTION 442 OF THE STANDARD SPECIFICATIONS.
14. CONTRACTOR SHALL BE RESPONSIBLE FOR PREPARING AND SUBMITTING ELECTRONIC AS-BUILT DRAWINGS, FOR UTILITIES AND DETENTION AREAS, TO THE OWNER AND ENGINEER FOR REVIEW AND APPROVAL PRIOR TO PROJECT ACCEPTANCE.
15. CONSTRUCTION STAKING, LAYOUT, AND GRADING SHALL BE THE RESPONSIBILITY OF THE CONTRACTOR USING THE BASIC TOPOGRAPHIC SURVEY CONTROLS PROVIDED IN THE PLANS. CONTRACTOR SHALL VERIFY SURVEY CONTROLS PRIOR TO BEGINNING CONSTRUCTION. ANY DISCREPANCIES IN THE SURVEY CONTROLS SHALL BE REPORTED TO THE OWNER AND ENGINEER PRIOR TO CONSTRUCTION. ANY ADDITIONAL SURVEY CONTROLS REQUIRED FOR CONSTRUCTION SHALL BE THE RESPONSIBILITY OF THE CONTRACTOR.
16. CONTRACTOR SHALL COORDINATE ALL UTILITY LINE CROSSINGS TO ENSURE ALL PIPES MAINTAIN MINIMUM COVER, MINIMUM CLEARANCES, AND PROPER SEPARATION. GRAVITY LINES SHALL HAVE PRECEDENCE OVER PRESSURIZED LINES.
17. CONTRACTOR SHALL SUBMIT SHOP DRAWINGS FOR ALL ITEMS INCORPORATED INTO THE WORK FOR ENGINEER REVIEW AND APPROVAL A MINIMUM OF 4 WEEKS PRIOR TO ORDERING.
18. REFERENCES TO "INSPECTION" OR "INSPECTOR" IN THE SPECIFICATIONS SHALL NOT CREATE, IMPOSE, OR GIVE RISE TO ANY DUTY OWED BY THE OWNER OR ENGINEER TO THE CONTRACTOR, ANY SUBCONTRACTOR, OR ANY SUPPLIER. ALL IMPROVEMENTS SHALL BE SUBJECT TO INSPECTION BY A DULY AUTHORIZED AND QUALIFIED OWNER'S REPRESENTATIVE BOTH DURING THE COURSE OF CONSTRUCTION AND AFTER CONSTRUCTION IS COMPLETE. THE INSPECTOR SHALL HAVE AUTHORITY OVER MATERIALS OF CONSTRUCTION, METHODS OF CONSTRUCTION AND WORKSMANSHIP TO ENSURE COMPLIANCE WITH WORKING DRAWINGS AND SPECIFICATIONS. THE CONTRACTOR SHALL PROVIDE FOR REASONABLE TESTS AND PROOF OF QUALITY OF MATERIALS AS REQUESTED BY THE INSPECTOR. UPON DUE CAUSE, WHICH SHALL INCLUDE WEATHER CONDITIONS, WORKMANSHIP OR NON-ADHEREANCE TO THE APPROVED PLANS AND SPECIFICATIONS, THE INSPECTOR SHALL HAVE THE AUTHORITY TO STOP CONSTRUCTION.
19. WHERE SECTION, SUB-SECTION, SUBDIVISION, OR PROPERTY MONUMENTS ARE ENCOUNTERED, THE OWNER'S REPRESENTATIVE SHALL BE NOTIFIED BEFORE SUCH MONUMENTS ARE REMOVED. THE CONTRACTOR SHALL PROTECT AND PRESERVE ALL PROPERTY MARKERS UNTIL AN OWNER OR AUTHORIZED SURVEYOR HAS WITNESSED OR REFERENCED THEIR LOCATION.
20. ALL TRENCH BACKFILL SHALL BE IMPORTED GRANULAR MATERIAL UNLESS EXISTING GRANULAR MATERIALS ARE SPECIFICALLY APPROVED BY THE OWNER'S REPRESENTATIVE.
21. ALL AGGREGATE BASE COURSE SHALL BE COMPACTED TO 98% STANDARD PROCTOR DENSITY.
22. ALL AGGREGATE BASE AREAS TO BE PAVED (PAVEMENT, SIDEWALK, CURB, OR STRUCTURES) SHALL BE PROOF-ROLLED WITH SEVERAL PASSES OF A FULLY LOADED DUMP TRUCK. CONTRACTOR SHALL NOTIFY THE OWNER AND/OR ENGINEER 24 HOURS PRIOR TO PROOF ROLL AND SHALL MAKE ALL CORRECTIONS TO PROVIDE A SATISFACTORY SUBGRADE.
23. ANY UNCONTROLLED CRACKING THAT OCCURS IN CONCRETE PAVEMENT, SIDEWALK, CURB, OR CURB AND GUTTER PRIOR TO FINAL ACCEPTANCE SHALL BE ROUTED OR SAWED AND SEALED ACCORDING TO THE STANDARD SPECIFICATIONS.
24. CONTRACTOR SHALL COORDINATE WITH UTILITY COMPANIES PRIOR TO ANY WORK IN AND AROUND UTILITY-OWNED INFRASTRUCTURE AND MAKE THEM AWARE OF WORK TO BE PERFORMED.
25. ALL SIDEWALKS SHALL BE 4 INCHES IN THICKNESS AND CONSTRUCTED TO THE WIDTH SHOWN ON THE PLANS. ALL SIDEWALKS SHALL BE CONSTRUCTED WITH A MIN. CROSS SLOPE OF 1% AND A MAX. CROSS SLOPE OF 2%. SIDEWALK THICKNESS SHALL BE INCREASED TO A MINIMUM 6" AT DRIVEWAYS OR AS REQUIRED BY THE MUNICIPALITY.
26. ANY SIDEWALKS, FENCES, AND OTHER ITEMS NOT SHOWN TO BE REMOVED, BUT DAMAGED DURING CONSTRUCTION, SHALL BE REPAIRED BY THE CONTRACTOR AT NO COST TO THE OWNER.
27. CONTRACTOR SHALL NOTIFY THE APPROPRIATE AGENCY A MINIMUM OF 48 HOURS PRIOR TO CONNECTING TO OR INSTALLING ANY PUBLIC SEWER OR WATER MAINS.
28. PRIOR TO COMMENCEMENT OF CONSTRUCTION, THE CONTRACTOR SHALL VERIFY ALL DIMENSIONS AND CONDITIONS AFFECTING THEIR WORK WITH THE ACTUAL CONDITIONS AT THE PROJECT SITE. IN ADDITION, THE CONTRACTOR MUST VERIFY THE ENGINEER'S LINE AND GRADE STAKES. IF THERE ARE ANY DISCREPANCIES FROM WHAT IS SHOWN ON THE CONSTRUCTION PLANS, THE CONTRACTOR MUST IMMEDIATELY PROVIDE THE INFORMATION TO THE ENGINEER BEFORE DOING ANY WORK. OTHERWISE, THE CONTRACTOR ASSUMES FULL RESPONSIBILITY. IN THE EVENT OF DISAGREEMENT BETWEEN THE CONSTRUCTION PLANS, STANDARD SPECIFICATIONS AND/OR DETAILS, THE CONTRACTOR SHALL SECURE WRITTEN INSTRUCTIONS FROM THE ENGINEER PRIOR TO PROCEEDING WITH ANY PART OF THE WORK EFFECTED BY OMISSIONS OR DISCREPANCIES. IF THE CONTRACTOR FAILS TO SECURE WRITTEN INSTRUCTIONS FROM THE ENGINEER, THE CONTRACTOR WILL BE CONSIDERED TO HAVE PROCEEDED AT HIS OWN RISK AND EXPENSE. IN THE EVENT OF ANY DOUBT OR QUESTION ARISING WITH RESPECT TO SPECIFICATIONS, THE DECISION OF THE ENGINEER SHALL BE FINAL.

EXISTING TOPOGRAPHY:

1. ALL UTILITIES SHOWN ARE APPROXIMATE ONLY AND ARE DERIVED FROM EXISTING UTILITY MARKINGS, OLD SITE PLANS, UTILITY COMPANY MAPS, PRIVATE LOCATOR AND OBSERVED EVIDENCE.
2. ALL PIPE SIZES REFERENCED HEREON ARE SHOWN ACCORDING TO UTILITY COMPANY MAPS, OLD SITE PLANS AND OBSERVED EVIDENCE. ALL PIPE SIZES AND INVERTS SHOULD BE VERIFIED PRIOR TO ANY CONSTRUCTION.
3. PRIOR TO ANY EXCAVATION CONTRACTORS SHALL CALL THE TOLL FREE J.U.L.I.E. TELEPHONE NUMBER 1-800-892-0123. ALLOW 48 HOURS FOR LOCATIONS OTHER THAN EMERGENCY ASSISTANCE.

SITE DEMOLITION:

1. EXISTING UTILITIES TO REMAIN, WHICH ARE DAMAGED BY THE CONTRACTOR DURING CONSTRUCTION, SHALL BE REPAIRED AND/OR REPLACED WITHOUT ADDITIONAL COMPENSATION. CONFLICTS WITH PROPOSED CONSTRUCTION AND UTILITIES TO REMAIN ARE TO BE BROUGHT TO THE IMMEDIATE ATTENTION OF THE CONSTRUCTION MANAGER FOR COORDINATION WITH THE OWNER'S REPRESENTATIVE, ENGINEER, AND UTILITY COMPANY.
2. NO DEMOLITION OR CONSTRUCTION ACTIVITIES SHALL TAKE PLACE WITHIN PUBLIC RIGHT-OF-WAY UNTIL ALL PERMITS ARE SECURED.
3. ALL PAVEMENT TO BE REMOVED SHALL BE SAWCUT FULL DEPTH.
4. CONTRACTOR SHALL EMPLOY ALL MEASURES NECESSARY DURING DEMOLITION TO CONTROL EROSION AND INSURE THAT SEDIMENT DOES NOT LEAVE THE SITE. TRACKING OF DIRT ONTO PUBLIC STREETS AND EXISTING PARKING LOT SHALL BE CLEANED IMMEDIATELY, AND ALL SEDIMENT AND EROSION CONTROL ITEMS SHALL BE INSTALLED PRIOR TO CLEARING AND DEMOLITION WORK.
5. CONTRACTOR IS RESPONSIBLE FOR VERIFYING EXISTING SITE CONDITIONS AND BECOMING FAMILIAR WITH ALL CONSTRUCTION DOCUMENTS.
6. ITEMS INDICATED TO BE REMOVED SHALL BE COMPLETELY REMOVED UNLESS INDICATED OTHERWISE.
7. ITEMS INDICATED TO BE SALVAGED SHALL BE CAREFULLY REMOVED AND STORED IN A LOCATION DESIGNATED BY THE OWNER.
8. ALL TREES AND BRUSH INDICATED TO BE REMOVED SHALL BE REMOVED COMPLETELY, INCLUDING ROOT BALLS.
9. UNLESS OTHERWISE IDENTIFIED AND/OR NOTED ON THE DEMOLITION PLAN, CONTRACTOR SHALL FULLY DEMOLISH, REMOVE, AND LAWFULLY DISPOSE OF ALL EXISTING BUILDINGS, IMPROVEMENTS, AND RELATED APPURTENANCES AT THIS SITE AND PROPERTY. CONTRACTOR SHALL ALSO DEMOLISH, REMOVE, AND LAWFULLY DISPOSE OF EXISTING IMPROVEMENTS AND CONSTRUCTIONS IN THE PUBLIC RIGHT-OF-WAY NECESSARY TO ACCOMPLISH THE NEW PROJECT WORK DESCRIBED ELSEWHERE IN THESE BIDDING AND CONSTRUCTION DOCUMENTS. CONTRACTOR SHALL PROCURE ALL NECESSARY PERMITS AND APPROVALS FOR SUCH DEMOLITION WORK (BOTH INSIDE THE PROPERTY LINE AND IN THE PUBLIC RIGHT-OF-WAY) PRIOR TO COMMENCING ANY DEMOLITION OPERATIONS.
10. CONTRACTOR SHALL FULLY PROTECT ALL SURROUNDING PROPERTIES FROM ANY AND ALL DAMAGE DURING DEMOLITION OPERATIONS; AND SHALL BE FULLY RESPONSIBLE FOR REPAIRING (TO A CONDITION ACCEPTABLE TO THE OWNER AND ARCHITECT) ANY AND ALL DAMAGE THAT DOES OCCUR.
11. CONTRACTOR SHALL PROVIDE ALL NECESSARY TRAFFIC CONTROLS AND RELATED APPURTENANCES THAT ARE REQUIRED BY ANY APPLICABLE CODES AND ORDINANCES, DURING ALL DEMOLITION OPERATIONS.
12. CONTRACTOR SHALL BE FULLY RESPONSIBLE FOR THE SAFETY AND SECURITY OF THE PROJECT SITE AND ITS SURROUNDINGS DURING DEMOLITION OPERATIONS.
13. ALL DEMOLISHED EXISTING MATERIALS, SYSTEMS, AND CONSTRUCTIONS SHALL BE DISPOSED OF IN A LAWFUL MANNER, AND WRITTEN RECORDS OF THE FINAL DESTINATION FOR THESE MATERIALS, SYSTEMS, AND CONSTRUCTIONS (INCLUDING ANY IDENTIFIED HAZARDOUS ITEMS) SHALL BE PROVIDED TO THE OWNER AND ENGINEER. ADDITIONALLY, SOME EXISTING MATERIALS AND SYSTEMS MAY NEED TO BE RECYCLED AND/OR OTHERWISE SALVAGED IN ORDER TO MEET THE SUSTAINABILITY AND LEED REQUIREMENTS OF THIS PROJECT. SEE OTHER PORTIONS OF THESE BIDDING AND CONSTRUCTION DOCUMENTS FOR SUCH REQUIREMENTS.
14. EXISTING SITE SHALL BE CLEANED ON A DAILY BASIS THROUGHOUT THE DURATION OF DEMOLITIONS OPERATIONS; AND NO DEBRIS OR PRODUCTS OF DEMOLITION SHALL BE ALLOWED TO ACCUMULATE OUTSIDE THE BOUNDARIES OF THE SITE.
15. CONTRACTOR SHALL FULLY COORDINATE ALL PROJECT DEMOLITION OPERATIONS, INCLUDING THE REMOVAL AND LAWFUL DISPOSAL OF ALL IDENTIFIED HAZARDOUS MATERIALS AND SYSTEMS.
16. CONTRACTOR SHALL SUBMIT A COMPLETE WRITTEN PLAN AND SCHEDULE FOR ALL PROPOSED DEMOLITION WORK TO OWNER AND ARCHITECT FOR REVIEW AND COMMENT, PRIOR TO BEGINNING ANY SUCH OPERATIONS. DURING THE COURSE OF THIS DEMOLITION WORK, IF ANY ARTIFACTS OR OTHER UNUSUAL ITEMS ARE DISCOVERED, CONTRACTOR SHALL NOTIFY OWNER AND ENGINEER IMMEDIATELY, BEFORE PROCEEDING ANY FURTHER. ANY EXPENSES RESULTING FROM THE FAILURE TO PROVIDE SUCH IMMEDIATE NOTIFICATION SHALL BE BORNE BY THE CONTRACTOR.

SITE LAYOUT:

1. JOINTS IN SIDEWALK SHALL BE TOOLED AT 5' MAX. INTERVALS, UNLESS INDICATED OTHERWISE.
2. NORTHING-EASTING COORDINATES AND DIMENSIONS FOR CURB AND GUTTER ARE TO FACE OF CURB.
3. CONTRACTOR SHALL COORDINATE ALL WORK WITHIN PUBLIC RIGHT-OF-WAY WITH THE APPROPRIATE PUBLIC AGENCY. NOTIFICATION SHALL OCCUR A MINIMUM OF 48 HOURS PRIOR TO COMMENCING WORK WITHIN PUBLIC RIGHT-OF-WAY. ALL PERMITS ARE THE RESPONSIBILITY OF THE CONTRACTOR.
4. P.C. CONCRETE PAVEMENT AND SIDEWALKS SHALL BE CLASS PV AND CLASS SI, RESPECTIVELY, IN ACCORDANCE WITH THE IDOT STANDARD SPECIFICATIONS.
5. CONTRACTOR IS RESPONSIBLE FOR VERIFYING EXISTING SITE CONDITIONS AND BECOMING FAMILIAR WITH ALL CONSTRUCTION DOCUMENTS.
6. SEE ARCHITECTURAL PLANS FOR EXACT BUILDING DIMENSIONS AND DOOR LOCATIONS.
7. CONTRACTOR SHALL COORDINATE EQUIPMENT PADS WITH EQUIPMENT MANUFACTURERS.

SITE GRADING AND EROSION CONTROL:

1. ALL SUBGRADE EXCAVATION AND COMPACTION SHALL BE COMPLETED IN ACCORDANCE WITH THE "**SOILS REPORT**" PREPARED BY CONSTRUCTION & GEOTECHNICAL MATERIAL TESTING, INC., DATED SEPTEMBER 23, 2024.
2. ENGINEERED STRUCTURAL FILLS SHALL BE INCLUDED IN OVERALL SITE DEVELOPMENT TO PROVIDE ADEQUATE STRUCTURAL SUPPORT FOR THE FLOOR SLABS ON GRADE AND ADJOINING PAVEMENT AREAS. REFER TO THE GEOTECHNICAL REPORT FOR APPROVED FILL MATERIALS.
3. WHERE FIRM FOUNDATION MATERIAL IS NOT ENCOUNTERED AT THE GRADE ESTABLISHED, DUE TO UNSUITABLE SOIL, ALL SUCH UNSUITABLE MATERIAL SHALL BE REMOVED AND REPLACED WITH APPROVED COMPACTED GRANULAR MATERIAL.
4. TOPSOIL SHALL BE STRIPPED IN ALL STRUCTURAL FILL AREAS BEFORE PLACEMENT OF FILL MATERIAL AND SHALL BE STOCKPILED IN AREAS DESIGNATED BY THE OWNER OR PER PLAN.
5. IT SHALL BE THE CONTRACTOR'S RESPONSIBILITY TO PERFORM EARTHWORK CALCULATIONS BASED ON THE PROVIDED PLANS AND TO LAWFULLY DISPOSE OF AND REMOVE ANY EXCESS MATERIAL FROM THE PROJECT SITE, OR TO PROVIDE ANY NECESSARY FILL MATERIAL THAT MAY BE REQUIRED TO MEET THE FINAL PLAN GRADES. THE DISPOSAL OR PROVIDING OF MATERIAL SHALL BE INCIDENTAL TO THE CONTRACT.
6. ALL VEGETATIVE AND STRUCTURAL EROSION CONTROL PRACTICES SHALL BE THE RESPONSIBILITY OF THE CONTRACTOR AND SHALL BE CONSTRUCTED AND MAINTAINED IN ACCORDANCE WITH THE MINIMUM STANDARDS AND SPECIFICATIONS OF THE "ILLINOIS URBAN MANUAL."
7. THE OWNER/ENGINEER SHALL PROVIDE THE SOIL EROSION AND SEDIMENT CONTROL PLANS INCLUDED HEREIN. THE CONTRACTOR SHALL BE RESPONSIBLE FOR DOCUMENTATION OF THE STORMWATER POLLUTION PREVENTION PLAN BOOKLET AND ASSOCIATED DOCUMENTS IN ACCORDANCE WITH THE "GENERAL NPDES PERMIT FOR STORM WATER DISCHARGES FROM CONSTRUCTION SITE ACTIVITIES," AND A COPY SHALL BE KEPT ONSITE AT ALL TIMES.
8. THE CONTRACTOR SHALL BE SOLELY RESPONSIBLE FOR THE INSTALLATION, ALL INSPECTIONS, AND MAINTENANCE OF ALL EROSION CONTROL FACILITIES REQUIRED BY THE GENERAL NPDES PERMIT UNTIL FINAL STABILIZATION OF ALL AREAS DISTURBED BY CONSTRUCTION OCCURS. MAINTENANCE AND REPLACEMENT OF EROSION CONTROL ITEMS SHALL BE CONSIDERED AS INCIDENTAL TO THE CONTRACT.
9. ALL AREAS DISTURBED BY CONSTRUCTION ACTIVITY MUST BE SEEDED, SODDED, BLANKETED OR OTHERWISE PROTECTED WITHIN 14 DAYS OF FINAL DISTURBANCE. ALL AREAS DISTURBED BY THE CONTRACTOR DURING THE CONSTRUCTION OF THIS PROJECT WHICH ARE LOCATED OUTSIDE OF THE PROPOSED SEEDING LIMITS SHALL BE GRADED TO DRAIN, FERTILIZED, SEEDED, MULCHED AND WATERED. THE COST ASSOCIATED WITH THE PLACEMENT OF ADDITIONAL FERTILIZER, SEED, MULCH AND WATERING SHALL BE THE RESPONSIBILITY OF THE CONTRACTOR. A MINIMUM OF 70% VEGETATIVE COVERAGE IS REQUIRED PRIOR TO ACCEPTANCE. SEE LANDSCAPE PLANS FOR ADDITIONAL REQUIREMENTS.
10. ALL EROSION CONTROL MEASURES SHOWN ON THE PLAN ARE THE MINIMUM MEASURES REQUIRED. UNFORESEEN CHANGES IN SCOPE, SCHEDULE OR CONSTRUCTION METHODS MAY RESULT IN CHANGES OR ADDITIONS TO THIS PLAN AND THE SWPPP. ANY CHANGES OR ADDITIONS NECESSARY TO MAINTAIN COMPLIANCE WITH THE NPDES PERMIT SHALL IMMEDIATELY BE BROUGHT TO THE ATTENTION OF THE OWNER.
11. SHOULD PROJECT SCHEDULING PROHIBIT THE ABILITY TO SEED DISTURBED EARTH UPON COMPLETION OF GRADING, CONTRACTOR SHALL EMPLOY ALTERNATE SOURCE CONTROLS IN ADDITION TO THOSE ON THIS PLAN, INCIDENTAL TO THE CONTRACT.
12. DUST CONTROL MUST BE PROVIDED AS NEEDED, BY WATERING OR OTHER MEANS.
13. ALL AREAS WITH THE EXCEPTION OF PAVEMENT SHALL BE FINISHED IN ACCORDANCE WITH THE LANDSCAPE PLANS INCLUDED IN THE PLAN SET.
14. CONTRACTOR SHALL INSTALL INLET FILTER PROTECTION BASKETS INSIDE ALL EXISTING AND PROPOSED MANHOLES AND INLET FRAMES.
15. CONTRACTOR IS REQUIRED TO PROVIDE AND USE A CONCRETE WASHOUT AREA FOR RINSING CONCRETE TRUCKS.
16. CONTRACTOR IS REQUIRED TO PROVIDE AND USE A TEMPORARY CONSTRUCTION ENTRANCE FOR ALL CONSTRUCTION TRAFFIC PER PLAN.
17. CONTRACTOR SHALL PROVIDE AND USE A WHEEL WASH SYSTEM TO ENSURE THAT ALL CONSTRUCTION TRAFFIC ENTERING AND EXITING THE SITE MAINTAIN CLEAN TIRES. ANY SEDIMENT TRACKED ONTO ADJACENT ROADWAYS OR PAVED AREAS SHALL BE REMOVED BY THE CONTRACTOR BY THE END OF THE SAME WORK DAY.
18. ALL ELEVATIONS SHOWN ARE TO FINISHED PAVEMENT UNLESS SPECIFIED OTHERWISE.
19. ALL SLOPES GREATER THAN OR EQUAL TO 4:1 SHALL BE STABILIZED WITH NAG S75BN OR EQUIVALENT.
20. CONTRACTOR SHALL PROVIDE A MINIMUM OF 6" TOPSOIL IN ALL ISLANDS, LANDSCAPE AREAS, AND OPEN SPACES.

SITE UTILITIES:

1. THIS CONSTRUCTION SHALL BE IN ACCORDANCE WITH THE FOLLOWING SPECIFICATIONS:
   A. "STANDARD SPECIFICATIONS FOR WATER AND SEWER MAIN CONSTRUCTION IN ILLINOIS", CURRENT EDITION.
   B. ILLINOIS DEPARTMENT OF TRANSPORTATION (IDOT) "STANDARD SPECIFICATIONS FOR ROAD AND BRIDGE CONSTRUCTION"
   C. CITY OF NAPERVILLE OFFICE OF PUBLIC WORKS STANDARDS AND SPECIFICATIONS
2. ALL UTILITY TRENCHES UNDER OR WITHIN 2' OF EXISTING OR PROPOSED PAVEMENT OR BUILDING SHALL BE BACKFILLED WITH COMPACTED GRANULAR MATERIAL IN ACCORDANCE WITH IDOT SPECIFICATIONS. CONTROLLED LOW-STRENGTH MATERIAL (CLSM) SHALL BE USED TO BACKFILL TRENCHES WITHIN PUBLIC RIGHT OF WAY. THE CLSM SHALL EXTEND 2 FT PAST THE PROPOSED PAVEMENT, CURB, OR SIDEWALK.
3. OPEN CUT TRENCHES SHALL BE SHEETED AND BRACED AS REQUIRED BY THE GOVERNING STATE, FEDERAL LAWS AND MUNICIPAL ORDINANCES, AND AS MAY BE NECESSARY TO PROTECT LIFE, PROPERTY OR THE WORK.
4. CONTRACTOR SHALL AT ALL TIMES DURING CONSTRUCTION PROVIDE AND MAINTAIN SUFFICIENT MEANS AND DEVICES TO REMOVE AND PROPERLY DISPOSE OF ALL WATER ENTERING THE EXCAVATIONS. WATER SHALL BE FILTERED AND DISCHARGED IN ACCORDANCE WITH THE NPDES REQUIREMENTS.
5. ALL PIPE SHALL BE INSTALLED ON A BEDDING OF APPROVED, COMPACTED GRANULAR MATERIAL UNLESS OTHERWISE APPROVED BY THE ENGINEER. THE BEDDING MATERIAL SHALL BE INSTALLED PER STANDARD SPECIFICATIONS AND PROVIDED PLAN DETAILS.
6. A MINIMUM HORIZONTAL SEPARATION OF 10 FEET SHALL BE MAINTAINED BETWEEN ALL WATER MAINS AND SEWERS. IF SEPARATION IS NOT POSSIBLE, WATER MAIN ENCASEMENT SHALL BE REQUIRED OR THE SEWER SHALL BE CONSTRUCTED OF WATER MAIN QUALITY PIPE.
7. WATER MAINS SHALL CROSS ABOVE SEWERS WITH A MINIMUM VERTICAL SEPARATION OF 18 INCHES WHILE STILL MAINTAINING THE REQUIRED DEPTH OF COVER. IF PROPER SEPARATION IS NOT POSSIBLE, OR IF THE WATER MAIN MUST BE ROUTED UNDER THE SEWER, WATER MAIN ENCASEMENT SHALL BE REQUIRED OR THE SEWER SHALL BE CONSTRUCTED OF WATER MAIN QUALITY PIPE.
8. ALL SANITARY SEWERS SHALL BE TESTED FOR EXFILTRATION OF AIR UNDER PRESSURE, INFILTRATION OF WATER, AND/OR EXFILTRATION OF WATER AS PER STANDARD SPECIFICATIONS. ALL SANITARY SEWERS SHALL BE DEFLECTION TESTED NO SOONER THAN 30 DAYS AFTER INSTALLATION. ALL MANHOLES SHALL BE TESTED FOR WATERTIGHTNESS BY EITHER ASTM C 969 OR ASTM C 1244.
9. STORM SEWER SHALL BE IN CONFORMANCE WITH THE FOLLOWING:
   A. REINFORCED CONCRETE PIPE (RCP), ASTM C76
      a. GASKETS - ASTM C443
      b. FITTINGS - ASTM C443
   B. SMOOTH INTERIOR WALLED HIGH DENSITY POLYETHYLENE PIPE (HDPE), ASTM D3212, N-12 WT
      a. WATER TIGHT JOINTS
      b. JOINT SHALL BE SEALED SUFFICIENTLY TO PREVENT JETTING OR LEAKING AT THE JOINT
   C. PVC STORM SEWER PIPING, ASTM D 3034, SDR 35
      a. BELL-AND-SPIGOT ENDS
      b. ASTM F 477, ELASTOMERIC SEALS FOR GASKETED JOINTS
   D. FRAME AND GRATES
      a. TYPE 1 CLOSED LID = NEENAH R-1713
      b. TYPE 1 OPEN LID = NEENAH R-2502
      c. CURB GRATE = NEENAH R-3501-P
      d. DITCH GRATE = NEENAH R-4342
10. SANITARY SEWER SHALL BE IN CONFORMANCE WITH THE FOLLOWING:
    A. PIPE AND FITTING MATERIAL - POLYVINYL CHLORIDE (PVC) SDR 26, ASTM D 3034, TYPE PSM
    B. GASKETS - FLEXIBLE ELASTOMERIC, ASTM F 477, ASTM D 3139
    C. JOINTS - ASTM D 3212
    D. BEDDING - CLASS II, ASTM 2321
11. ALL CLEANOUT RIMS SHALL BE CONSTRUCTED FLUSH WITH THE FINISHED GROUND SURFACE.
12. CONTRACTOR SHALL COORDINATE CONSTRUCTION OF SANITARY SEWER SERVICES WITH THE DEPARTMENT OF PUBLIC WORKS.
13. CONTRACTOR SHALL COORDINATE WATER MAIN, FIRE AND DOMESTIC WATER SERVICES WITH THE DEPARTMENT OF PUBLIC WORKS.
14. GENERAL CONTRACTOR SHALL COORDINATE ALL UTILITY LINES THAT ENTER THE BUILDING. IN GENERAL, PLUMBING PLANS SHOW ALL INTERIOR BUILDING PIPING AND PIPING UP TO 5-FEET OUTSIDE THE BUILDING. CIVIL PLANS SHOW SITE PIPING BEGINNING FROM 5-FEET OUTSIDE THE BUILDING. GENERAL CONTRACTOR IS RESPONSIBLE FOR ALL UTILITY CONNECTIONS.
15. CONTRACTOR SHALL COORDINATE ALL UTILITY LINE CROSSINGS TO ENSURE ALL PIPES MAINTAIN MINIMUM COVER, MINIMUM CLEARANCES, AND PROPER SEPARATION. GRAVITY LINES SHALL HAVE PRECEDENCE OVER PRESSURIZED LINES.
16. ALL TRENCH BACKFILL SHALL BE IMPORTED GRANULAR MATERIAL UNLESS EXISTING GRANULAR MATERIALS ARE SPECIFICALLY APPROVED BY THE OWNER'S REPRESENTATIVE.
17. ALL MANHOLES AND INLET CASTINGS LOCATED WITHIN BITUMINOUS ASPHALT PAVEMENT SHALL BE CONSTRUCTED WITH A CONCRETE APRON AT THE SURFACE.
18. FOR ALL WATERMAIN CONSTRUCTION:
    A. WATER MAIN AND SERVICES TO BE INSTALLED WITH A MINIMUM OF 5'-6" OF COVER FROM FINISHED GRADE TO TOP OF WATER PIPE.
    B. TWO COMPLETE PIPE LENGTHS OF RESTRAINED JOINT PIPE SHALL BE CONSTRUCTED ON THE BRANCH LEG OF ALL TEES AND BOTH SIDES OF ALL 90 DEGREE BENDS.
    C. ONE COMPLETE PIPE LENGTH OF RESTRAINED JOINT PIPE SHALL BE CONSTRUCTED ON BOTH SIDES OF ALL 11-1/4 AND 22-1/2 DEGREE BENDS.
    D. ALL BENDS, TEES, PLUGS, VALVES AND HYDRANTS SHALL BE RESTRAINED JOINT.
    E. ALL WATERMAIN PIPE 4" AND LARGER SHALL BE POLY WRAPPED DUCTILE IRON PIPE SPECIAL CLASS 52, 250 PSI RATING, WITH SINGLE GASKET JOINTS. CEMENT LINING SHALL BE PROVIDED FOR ALL PIPE.
    F. ALL WATER SERVICE PIPE LESS THAN 4" SHALL BE COPPER PIPE, TYPE K OR PVC SDR 9 WITH A PRESSURE RATING OF 200 PSI.
19. THE DEVELOPER IS RESPONSIBLE FOR THE CONSTRUCTION AND INSTALLATION OF A TRANSFORMER PAD AND VAULT. THE DPU-E ENGINEER MUST BE INFORMED PRIOR TO THE INSTALLATION OF THE PAD AND VAULT. A MAIN DISCONNECT OR CIRCUIT BREAKER IS REQUIRED FOR DPU-E ACCESS IN CASE OF A NEED FOR SERVICE OR IN AN EMERGENCY. DPU-E SHALL MAKE THE FINAL CONNECTIONS OF THE CUSTOMER'S SERVICE TO THE TRANSFORMER TERMINALS. A MINIMUM OF EIGHT FEET OF ADDITIONAL CONDUCTOR LENGTH MUST BE LEFT ON THE CUSTOMER'S SERVICE CABLES.
20. ACCESSING STREET LIGHT CONTROLLERS, ELECTRICAL PEDESTALS, ELECTRICAL TRANSFORMERS, OR OTHER CITY OWNED EQUIPMENT IS STRICTLY PROHIBITED. THESE ACTIONS ARE SUBJECT TO FINES AND PENALTIES PER THE ELECTRIC SERVICE RULES AND POLICIES UP TO AND INCLUDING THE INABILITY TO OBTAIN PERMITS. SHOULD ACCESS BE REQUIRED FOR THE PLACEMENT OF CONDUITS AND/OR CONDUCTORS, THE CONTRACTOR MUST CONTACT CITY DISPATCH AT 630-420-6187, AT LEAST 48 HOURS IN ADVANCE TO SCHEDULE AN APPOINTMENT WITH ELECTRIC UTILITY PERSONNEL. ALL QUALIFIED ELECTRIC WORKERS REQUIRE APPROPRIATE ARC FLASH PPE TO ACCESS ENERGIZED EQUIPMENT, PER NFPA 70E. WORKERS WITH INADEQUATE PPE WILL BE DENIED ACCESS TO ENERGIZED EQUIPMENT.

NDEMNIFICATION:

1. THE CONTRACTOR SHALL INDEMNIFY AND HOLD HARMLESS THE OWNER, THE CITY OF NAPERVILLE, AND CAGE ENGINEERING, INC. FROM AND AGAINST ALL CLAIMS, DAMAGES, LOSSES AND EXPENSES, INCLUDING ATTORNEY'S FEES ARISING OUT OF OR RESULTING FROM THE PERFORMANCE OF THE CONTRACTOR'S WORK. IN ANY AND ALL CLAIMS AGAINST THE OWNER OR CAGE ENGINEERING, INC. BY ANY EMPLOYEE OF THE CONTRACTOR, OR ANYONE DIRECTLY OR INDIRECTLY EMPLOYED BY THE CONTRACTOR, OR ANYONE FOR WHOSE ACTS THE CONTRACTOR MAY BE LIABLE, THE INDEMNIFICATION OBLIGATION SHALL NOT BE LIMITED IN ANY WAY BY ANY LIMITATION ON THE AMOUNT OF DAMAGES, COMPENSATION OR BENEFITS PAYABLE BY OR FOR THE CONTRACTOR UNDER WORKER'S COMPENSATIONS ACTS, DISABILITY BENEFIT ACTS OR OTHER EMPLOYEE BENEFIT ACTS.

INSURANCE REQUIREMENTS

1. THE CONTRACTOR SHALL PURCHASE AND MAINTAIN COMPREHENSIVE GENERAL LIABILITY AND OTHER INSURANCE SET FORTH BELOW WHICH WILL PROVIDE PROTECTION FROM CLAIMS WHICH MAY ARISE OUT OF OR RESULTING FROM THE PERFORMANCE OF WORK BY ANYONE DIRECTLY OR INDIRECTLY EMPLOYED BY THE CONTRACTOR OR BY ANYONE FOR WHOSE ACTS THE CONTRACTOR MAY BE LIABLE.
   A. COMPREHENSIVE AUTOMOBILE LIABILITY INSURANCE COVERING ALL AUTOMOBILES, TRUCKS, TRAILERS AND ANY OTHER MOTORIZED EQUIPMENT OWNED OR LEASED BY THE CONTRACTOR.
   B. WORKER'S COMPENSATION AND EMPLOYER'S LIABILITY INSURANCE IN ANY AMOUNT NOT LESS THAN STATUTORY LIMITS REQUIRED BY LAW.
   C. COMPREHENSIVE GENERAL LIABILITY INSURANCE INCLUDING COVERAGE IN THE AMOUNT OF $500,000 PER ACCIDENT FOR PROPERTY DAMAGE AND $1,000,000 PER PERSON AND $3,000,000 AGGREGATE PER ACCIDENT FOR BODILY INJURY, SICKNESS OR DISEASE, OR DEATH OF ANY PERSON.
2. CERTIFICATE OF INSURANCE
   A. THE CONTRACTOR SHALL NOT COMMENCE WORK UNTIL HE HAS FILED WITH THE MUNICIPALITY AND ITS INSPECTOR A CERTIFICATE OF INSURANCE SHOWING COMPLETE COVERAGE OF ALL INSURANCE REQUIRED, SIGNED BY THE INSURANCE COMPANIES OR THEIR AUTHORIZED AGENTS. EACH CERTIFICATE SHALL PROVIDE THAT COVERAGE SHALL NOT BE TERMINATED OR REDUCED WITHOUT 30 DAYS ADVANCE WRITTEN NOTICE TO THE MUNICIPALITY AND ITS INSPECTOR. THE CONTRACTOR SHALL NAME THE OWNER, THE CITY OF NAPERVILLE, AND CAGE ENGINEERING, INC. AS ADDITIONAL INSUREDS ON THE COMPREHENSIVE GENERAL LIABILITY AND AUTOMOBILE LIABILITY POLICIES.

CONSTRUCTION MEANS, METHODS, SAFETY

1. THE CONTRACTOR SHALL BE RESPONSIBLE FOR COMPLIANCE WITH ALL FEDERAL, STATE AND LOCAL LAWS, INCLUDING OSHA STANDARDS AND WITH ANY OTHER APPLICABLE LAWS, ORDINANCES, RULES, REGULATIONS AND ORDERS OF ANY PUBLIC BODY HAVING JURISDICTION FOR THE SAFETY OF PERSONS OR PROPERTY OR TO PROTECT THEM FROM DAMAGE, INJURY OR LOSS. THE CONTRACTOR SHALL PROVIDE ALL SAFEGUARDS, SAFETY DEVICES AND PROTECTIVE EQUIPMENT AND SHALL BE RESPONSIBLE FOR INITIATING, MAINTAINING, AND SUPERVISING ALL SAFETY PRECAUTIONS AND PROGRAMS UTILIZED BY THE CONTRACTOR AND HIS SUB-CONTRACTORS IN THE PERFORMANCE OF THEIR WORK AND SHALL TAKE ANY OTHER ACTIONS NECESSARY TO PROTECT THE LIFE AN HEALTH OF EMPLOYEES ON THE JOB AND THE SAFETY OF THE PUBLIC AND TO PROTECT PROPERTY IN CONNECTION WITH THE PERFORMANCE OF WORK ON THIS PROJECT.
2. THE CONTRACTOR SHALL BE RESPONSIBLE FOR THE CONSTRUCTION MEANS, METHODS, TECHNIQUES OR PROCEDURES, EQUIPMENT, AND FOR SAFETY PRECAUTIONS OR PROGRAMS, UNLESS SUCH MEANS AND EQUIPMENT ARE SPECIFIED IN THESE CONTRACT DOCUMENTS. THE CONTRACTOR SHALL COMPLY WITH SECTION 108.06 LABOR, METHODS, AND EQUIPMENT OF THE "STANDARD SPECIFICATIONS."

2200 CABOT DRIVE
SUITE 325
LISLE, IL 60532
P: 630.598.0007
WWW.CAGECIVIL.COM

CAGE
CIVIL ENGINEERING

FREDERICK W. THAETE
062-055840
LICENSED PROFESSIONAL ENGINEER OF ILLINOIS
EXP. 11/30/2025

REVISIONS

- 2: 06/25/2025 CITY RESUBMITTAL
- 1: 05/23/2025 CITY RESUBMITTAL

THIS DESIGN AND THESE DRAWINGS ARE THE PROPERTY OF CAGE ENGINEERING, INC. NO PART OF THIS WORK MAY BE REPRODUCED WITHOUT PRIOR WRITTEN PERMISSION FROM CAGE ENGINEERING, INC.

M/I HOMES OF CHICAGO, LLC

NORTHWOODS OF NAPERVILLE

1151 WARRENVILLE ROAD
NAPERVILLE, IL 60563

PROJ NO: 240255
ENG : DJB
DATE : 07/07/2025

SHEET TITLE
GENERAL NOTES & SPECIFICATIONS

SHEET NUMBER
C0.1

EXHIBIT C

CITY OF NAPERVILLE TRANSPORTATION, ENGINEERING AND DEVELOPMENT BUSINESS GROUP

STANDARD CONSTRUCTION PLAN NOTES FOR DEVELOPMENT PROJECTS

AUGUST 2023

GENERAL NOTES

1. THE OWNER OR THEIR REPRESENTATIVE IS RESPONSIBLE TO OBTAIN ANY AND ALL PERMITS REQUIRED BY APPLICABLE GOVERNMENTAL AGENCIES.
2. ALL WORK SHALL BE PERFORMED IN ACCORDANCE WITH THE CITY OF NAPERVILLE DESIGN MANUAL AND STANDARD SPECIFICATIONS (CURRENT EDITION) AND WITH THE ILLINOIS DEPARTMENT OF TRANSPORTATION'S "STANDARD SPECIFICATIONS FOR ROAD AND BRIDGE CONSTRUCTION" (CURRENT EDITION).
3. ALL CONTRACTORS DOING WORK IN THE PUBLIC RIGHT-OF-WAY MUST BE LICENSED (WHEN APPLICABLE) TO MAKE PUBLIC IMPROVEMENTS WITHIN THE NAPERVILLE CORPORATE LIMITS.
4. THE CONTRACTOR/DEVELOPER ASSUMES ALL RESPONSIBILITY AND LIABILITY FOR ANY ACTION RESULTING FROM THEIR WORK WITHIN THE PUBLIC RIGHT-OF-WAY.
5. THE CONTRACTOR/DEVELOPER SHALL INDEMNIFY AND HOLD HARMLESS THE CITY OF NAPERVILLE.
6. PRIOR TO COMMENCEMENT OF ANY OFF-SITE CONSTRUCTION, THE CONTRACTOR SHALL SECURE WRITTEN AUTHORIZATION THAT ALL OFF-SITE EASEMENTS HAVE BEEN SECURED AND THAT PERMISSION HAS BEEN GRANTED TO ENTER ONTO PRIVATE PROPERTY.
7. THE CONTRACTOR AND THEIR ON-SITE REPRESENTATIVES WILL BE REQUIRED TO ATTEND A PRECONSTRUCTION MEETING WITH THE CITY OF NAPERVILLE PRIOR TO ANY WORK BEING STARTED. A PRECONSTRUCTION MEETING WILL NOT BE SCHEDULED UNTIL THE PROJECT HAS BEEN APPROVED BY THE CITY OF NAPERVILLE DEVELOPMENT REVIEW TEAM AND THE REQUIRED SURETY HAS BEEN POSTED.
8. A MINIMUM OF 48 HOURS NOTICE SHALL BE GIVEN TO THE CITY OF NAPERVILLE TED BUSINESS GROUP (630-420-6100 OPTION 1) PRIOR TO STARTING WORK OR RESTARTING WORK AFTER SOME ABSENCE OF WORK FOR ANY REASON.
9. IT SHALL BE THE CONTRACTOR'S RESPONSIBILITY TO ADEQUATELY IDENTIFY AND LOCATE ALL EXISTING UTILITIES PRIOR TO EXCAVATION. BEFORE STARTING CONSTRUCTION, THE CONTRACTOR SHALL CONTACT JULIE FOR THE LOCATION OF ANY AND ALL UTILITIES. THE TOLL-FREE NUMBER IS 800-892-0123. IT IS THE RESPONSIBILITY OF THE CONTRACTOR TO LOCATE ANY PRIVATE FACILITIES OR NON-JULIE MEMBER FACILITIES.
10. THE CONTRACTOR CAN SCHEDULE ALL NECESSARY SITE INSPECTIONS WITH THE CITY OF NAPERVILLE BY CALLING (630) 420-6100 OPTION 1 BETWEEN THE HOURS OF 8:00AM AND 4:00PM (CLOSED 1:00PM TO 2:00PM DAILY) ON WEEKDAYS WHEN THE CITY IS OPEN FOR BUSINESS. THE CONTRACTOR WILL BE REQUIRED TO PROVIDE THE SITE PERMIT NUMBER FOR THE PROJECT IN ORDER TO SCHEDULE THE INSPECTION(S).
11. RECORD DRAWINGS ARE REQUIRED TO BE SUBMITTED AND APPROVED BY THE CITY OF NAPERVILLE PRIOR TO FINAL OCCUPANCY BEING GRANTED.
12. FINAL ACCEPTANCE OF PUBLIC IMPROVEMENTS SHALL BE GRANTED ONLY AFTER A FINAL INSPECTION HAS BEEN COMPLETED AND HAS REVEALED THAT ALL IMPROVEMENTS HAVE BEEN SATISFACTORILY COMPLETED IN ACCORDANCE WITH THE NAPERVILLE STANDARD SPECIFICATIONS. UTILITIES ARE NOT CONSIDERED ACCEPTED UNTIL THEY ARE FORMALLY ACCEPTED BY THE CITY COUNCIL AS REQUIRED IN ACCORDANCE WITH THE NAPERVILLE MUNICIPAL CODE.

STORM SEWER NOTES (GENERAL)

1. NO CONNECTION TO AN EXISTING PUBLIC STORM SEWER MAY BE MADE WITHOUT PERMISSION OF THE CITY ENGINEER.
2. THE CONTRACTOR SHALL REPAIR ANY EXISTING FIELD DRAINAGE TILE DAMAGED DURING CONSTRUCTION AND PROPERLY REROUTE AND/OR CONNECT SAID TILE TO THE NEAREST STORM SEWER OUTLET. ALL LOCATIONS OF ENCOUNTERED FIELD DRAINAGE TILE SHALL BE PROPERLY INDICATED ON THE CONTRACTOR'S RECORD DRAWINGS.

STORM SEWER NOTES (STORM SEWER WORK IN PLANS)

1. THE FOLLOWING MATERIALS ARE PERMITTED FOR STORM SEWER AND PIPE CULVERTS. WHERE A PARTICULAR MATERIAL IS SPECIFIED IN THE PLANS OR SPECIAL PROVISIONS, NO OTHER KIND OF MATERIAL WILL BE PERMITTED:
   - 1a REINFORCED CONCRETE PIPE (RCP) - REINFORCED CONCRETE PIPE SHALL CONFORM TO ASTM DESIGNATION C 76, CLASSES I, II, III, IV OR V. BITUMINOUS JOINTS SHALL CONFORM TO ASTM DESIGNATIONS C 14 OR C 76 AS MAY BE APPLICABLE. BITUMINOUS MATERIAL SHALL CONSIST OF A HOMOGENEOUS BLEND OF BITUMEN, INERT FILLER, AND SUITABLE SOLVENT APPROVED BY THE CITY ENGINEER. RUBBER GASKET JOINTS SHALL CONFORM TO ASTM C 433. REINFORCED CONCRETE PIPE SHALL ALSO BE PERMITTED AS ROUND, ELLIPTICAL, OR BOX SHAPED OR AS REINFORCED CONCRETE ARCH CULVERT.
   - 1b NON-REINFORCED CONCRETE PIPE - NON-REINFORCED CONCRETE PIPE SHALL BE ALLOWED FOR PIPES WITH A 10 INCH OR SMALLER DIAMETER. NON-REINFORCED CONCRETE PIPE SHALL CONFORM TO ASTM DESIGNATION C 14, CLASS 3. BITUMINOUS JOINTS SHALL CONFORM TO ASTM DESIGNATIONS C 14 OR C 76 AS MAY BE APPLICABLE. BITUMINOUS MATERIAL SHALL CONSIST OF A HOMOGENEOUS BLEND OF BITUMEN, INERT FILLER, AND SUITABLE SOLVENT APPROVED BY THE CITY ENGINEER. RUBBER GASKET JOINTS SHALL CONFORM TO ASTM C 433.
   - 1c DUCTILE IRON PIPE (DIP) - DUCTILE IRON PIPE SHALL CONFORM TO ANSI A 21.51 (AWWA C-151), CLASS THICKNESS DESIGNED PER ANSI A 21.50 (AWWA C-150), TAR (SEAL) COATED AND CEMENT LINED PER ANSI A 21.4 (AWWA C-104), WITH MECHANICAL OR RUBBER RING (SLIP SEAL OR PUSH ON) JOINTS. ALL DUCTILE IRON PIPE SHALL BE WRAPPED WITH POLYETHYLENE.
   - 1d POLYVINYL CHLORIDE PIPE (PVC) - POLYVINYL CHLORIDE (PVC) PIPE SHALL CONFORM TO ASTM D 3034, TYPE PSM. THE MINIMUM STANDARD DIMENSION RATIO (SDR) SHALL BE 26. THE PIPE SHALL BE MADE OF PVC PLASTIC HAVING A MINIMUM CELL CLASSIFICATION OF 12454-C AND SHALL HAVE A MINIMUM PIPE STIFFNESS OF FORTY-SIX (46) LBS. PER INCH (317 KPA). JOINTS FOR PVC PIPE SHALL BE FLEXIBLE ELASTOMETRIC SEALS PER ASTM D 3212.
   - 1e HIGH DENSITY POLYETHELYNE PIPE (HDPE) - HIGH-DENSITY POLYETHYLENE (HDPE) PIPE SHALL CONFORM TO THE REQUIREMENTS OF AASHTO M 252 AND M 294. PIPE AND FITTINGS SHALL BE MADE FROM VIRGIN PE COMPOUNDS WHICH CONFORM TO THE REQUIREMENTS OF CELL CLASS 324420C AS DEFINED AND DESCRIBED IN ASTM D 3350. RUBBER GASKET JOINTS SHALL BE USED. 1f FULLY GALVANIZED CORRUGATED STEEL PIPE - FULLY GALVANIZED CORRUGATED STEEL PIPE MAY BE USED FOR RESIDENTIAL DRIVEWAY CROSSINGS ONLY WHEN A DITCH SECTION IS PRESENT. THE MINIMUM CULVERT SIZE IS 12" DIAMETER.
2. BEDDING, OTHER THAN CONCRETE EMBEDMENT, SHALL CONSIST OF GRAVEL, CRUSHED GRAVEL, OR CRUSHED STONE 1/4 INCH TO 1 INCH IN SIZE. AS A MINIMUM, THE MATERIAL SHALL CONFORM TO THE REQUIREMENTS OF IDOT STANDARD SPECIFICATIONS. THE GRADATION SHALL CONFORM TO GRADATION CA-7 OR CA-11 OF THE STANDARD SPECIFICATIONS.
3. BACKFILL MATERIAL SHALL CONFORM TO THE REQUIREMENTS OF IDOT STANDARD SPECIFICATIONS. THE GRADATION SHALL CONFORM TO GRADATION CA-6 OF THE STANDARD SPECIFICATIONS. BACKFILL MATERIAL SHALL BE COMPACTED TO 95% STANDARD PROCTOR DENSITY.
4. JOINTS CONNECTING DISSIMILAR PIPE MATERIALS SHALL BE MADE WITH SEWER CLAMP NON-SHEAR TYPE COUPLINGS; CASCADE CSS, ROMAC LSS, FERNCO, INC. SHEAR RING, OR APPROVED EQUAL. WHEN AVAILABLE, A STANDARD JOINT WITH A TRANSITION GASKET MAY BE USED. THE NAME OF THE MANUFACTURER, CLASS, AND DATE OF ISSUE SHALL BE CLEARLY IDENTIFIED ON ALL SECTIONS OF PIPE. THE CONTRACTOR SHALL ALSO SUBMIT BILLS OF LADING, OR OTHER QUALITY ASSURANCE DOCUMENTATION WHEN REQUESTED BY THE CITY ENGINEER. ALL NUTS AND BOLTS FOR COUPLINGS SHALL BE STAINLESS STEEL.
5. MANHOLES FOR STORM SEWERS SHALL HAVE A MINIMUM INSIDE DIAMETER OF 48 INCHES AND SHALL BE CONSTRUCTED OF PRECAST CONCRETE UNITS IN ACCORDANCE WITH ASTM C478-05 (OR LATEST EDITION) AND SHALL CONFORM TO THE CITY OF NAPERVILLE STANDARD DETAIL. ALL MANHOLES SHALL BE WATER-TIGHT. ALL VISIBLE LEAKS SHALL BE SEALED IN A MANNER ACCEPTABLE TO THE CITY ENGINEER.
6. MANHOLES SHALL BE FURNISHED WITH A SELF-SEALING FRAME AND SOLID COVER (EAST JORDAN IRON WORKS 1022 WITH TYPE A SOLID COVER, OR APPROVED EQUAL) WITH THE WORD "STORM" IMPRINTED ON THE COVER IN RAISED LETTERS. ALL FRAMES AND LIDS SHALL MEET OR EXCEED AASHTO H-20 LOADING SPECIFICATIONS. FRAMES SHALL BE SHOP PAINTED WITH ASPHALTIC BASE PAINT. BOTH THE MANHOLE FRAME AND COVER SHALL HAVE MACHINED HORIZONTAL AND VERTICAL BEARING SURFACES. INVERTED MANHOLE FRAMES ARE NOT ALLOWED. PICK HOLES SHALL NOT CREATE OPENINGS IN THE MANHOLE COVER.
7. MANHOLE STEPS ON MAXIMUM 16 INCH CENTER SHALL BE FURNISHED WITH EACH MANHOLE, SECURELY ANCHORED IN PLACE, TRUE TO VERTICAL ALIGNMENT, IN ACCORDANCE WITH THE NAPERVILLE STANDARD DETAILS. STEPS SHALL BE COPOLYMER POLYPROPYLENE REINFORCED WITH 1/2 INCH A615/A615M-05A (OR LATEST EDITION) GRADE 60 STEEL REINFORCEMENT, MEETING OR EXCEEDING ASTM C 478-05 (OR LATEST EDITION) AND OSHA STANDARDS.
8. CATCH BASINS AND INLETS SHALL HAVE A MINIMUM INSIDE DIAMETER OF 24 INCHES AND SHALL BE CONSTRUCTED OF PRECAST CONCRETE UNITS IN ACCORDANCE WITH ASTM C478-05 (OR LATEST EDITION) AND SHALL CONFORM TO THE CITY OF NAPERVILLE STANDARD DETAIL. ALL CATCH BASINS AND INLETS SHALL BE WATER-TIGHT AT ALL POINTS BELOW GRADE. ALL VISIBLE LEAKS SHALL BE SEALED IN A MANNER ACCEPTABLE TO THE CITY ENGINEER. CATCH BASINS AND INLETS SHALL BE FURNISHED WITH A FRAME AND GRATE BASED UPON THE LOCATION OF THE INSTALLATION AS LISTED BELOW. ALL FRAMES AND GRATES SHALL MEET OR EXCEED AASHTO H-20 LOADING SPECIFICATIONS. FRAMES SHALL BE SHOP PAINTED WITH ASPHALTIC BASE PAINT.
   - A) PAVEMENT: EAST JORDAN IRON WORKS 1022 FRAME WITH TYPE M1 RADIAL FLAT GRATE, NEENAH R-2502, OR APPROVED EQUAL FOR OPEN GRATES. EAST JORDAN IRON WORKS 1022 FRAME WITH TYPE A SOLID COVER, NEENAH R-1772, OR APPROVED EQUAL FOR CLOSE LIDS.
   - B) BARRIER CURB AND GUTTER: EAST JORDAN IRON WORKS 7220 FRAME WITH TYPE M1 GRATE AND T1 CURB BOX, NEENAH R-3278-A, OR APPROVED EQUAL.
   - C) DEPRESSED CURB: EAST JORDAN IRON WORKS 5120 FRAME AND GRATE, NEENAH R-3225-L, OR APPROVED EQUAL.
   - D) MOUNTABLE CURB: EAST JORDAN IRON WORKS 7525 FRAME AND GRATE, NEENAH R-3501-P, OR APPROVED EQUAL.
   - E) NON-PAVED AREAS: EAST JORDAN IRON WORKS 6527 BEEHIVE GRATE, NEENAH R-4340-B, OR APPROVED EQUAL. ALTERNATELY, IN AREAS WHERE THERE IS THE LIKELIHOOD OF PEDESTRIAN TRAFFIC, EAST JORDAN IRON WORKS 1022 FRAME WITH TYPE M1 RADIAL FLAT GRATE, OR APPROVED EQUAL MAY BE USED.
9. THE STEEL CASING PIPE SHALL BE BITUMINOUS COATED, A MINIMUM OF 30 MILS THICKNESS INSIDE AND OUT, AND SHALL BE OF LEAK PROOF CONSTRUCTION, CAPABLE OF WITHSTANDING THE ANTICIPATED LOADINGS. SEE TABLE 200-1 IN THE NAPERVILLE STANDARD SPECIFICATIONS FOR THE MINIMUM WALL THICKNESSES OF VARIOUS STEEL CASING DIAMETERS. THE STEEL CASING PIPE SHALL HAVE MINIMUM YIELD STRENGTH OF 35,000 PSI AND SHALL MEET THE REQUIREMENTS OF A139/A139M-04 (OR LATEST EDITION), GRADE B. RING DEFLECTION SHALL NOT EXCEED 2% OF THE NOMINAL DIAMETER. THE STEEL CASING PIPE SHALL BE DELIVERED TO THE JOBSITE WITH BEVELED ENDS TO FACILITATE FIELD WELDING.
10. ALL PIPE SHALL BE LAID TRUE TO LINE AND GRADE. DIRT AND OTHER FOREIGN MATERIAL SHALL BE PREVENTED FROM ENTERING THE PIPE OR PIPE JOINT DURING HANDLING OR LAYING OPERATIONS. ALL STORM SEWER PIPE TO PIPE CONNECTIONS SHALL BE SEALED WITH BUTYL MASTIC TO ENSURE WATER TIGHTNESS. LIFT HOLES TO BE SEALED USING BUTYL MASTIC AND CONCRETE PLUGS. AT NO TIME SHALL CONNECTIONS BETWEEN THE STORM SEWER AND SANITARY SEWER BE ALLOWED.
11. FOR STRUCTURES LOCATED IN PAVED AREAS, A MINIMUM OF FOUR, 2-INCH DIAMETER HOLES SHALL BE DRILLED OR PRECAST INTO THE STRUCTURE WITHIN 1 FOOT OF THE LOWEST PIPE INVERT. THE HOLES SHALL BE DISTRIBUTED EQUIDISTANT AROUND THE PERIMETER OF THE STRUCTURE. A 1-FOOT BY 1-FOOT SECTION OF UNDERDRAIN FILTER CLOTH MATERIAL SHALL BE SUFFICIENTLY FIXED TO THE OUTSIDE OF THE MANHOLE WITH MASTIC MATERIAL TO PREVENT SLIPPAGE DURING BACKFILLING.
12. ALL STORM SEWER STRUCTURE FRAMES WITHOUT INSIDE FLANGES SHALL BE SHAPED WITH NONSHRINKING HYDRAULIC CEMENT TO FORM A FILLET TO THE STRUCTURE OR ADJUSTING RING.

    WHEN ADJUSTMENTS ARE NECESSARY, NO MORE THAN 12 INCHES OF VERTICAL ADJUSTMENT MAY BE MADE USING THE MINIMUM PRACTICAL NUMBER OF INDIVIDUAL RINGS.

    ALL RINGS SHALL BE HIGH DENSITY POLYETHYLENE PLASTIC (HDPE), RECYCLED RUBBER, HIGH DENSITY EXPANDING POLYSTYRENE, EXPANDED POLYPROPYLENE (EPP), OR OTHER MATERIAL AS APPROVED BY THE CITY ENGINEER. PRECAST CONCRETE RINGS, BRICKS, ROCKS, SHIMS, OR CONCRETE BLOCKS WILL NOT BE ALLOWED. TAPERED ADJUSTING RINGS SHALL BE REQUIRED WHEN THE FRAME WILL NEED TO MATCH THE SLOPE OF THE ROADWAY.

    A RESILIENT, FLEXIBLE, NON-HARDENING, PREFORMED BITUMINOUS MASTIC MATERIAL, CONSEAL 102 B OR APPROVED EQUAL, SHALL BE USED BETWEEN THE CONE OR TOP BARREL SECTION OF THE STRUCTURE AND THE ADJUSTING RINGS. A THICK BEAD OF NON-HARDENING ELASTOMERIC JOINT SEALANT CONFORMING TO ASTM C-920, TYPE S, GRADE NS, SHALL BE APPLIED BETWEEN ALL INDIVIDUAL RINGS, AND BETWEEN THE ADJUSTING RINGS AND THE FRAME. THE SEALANT OR MASTIC MATERIAL SHALL BE APPLIED IN SUCH A MANNER THAT NO SURFACE WATER OR GROUND WATER INFLOW CAN ENTER THE STRUCTURE.

EROSION CONTROL AND DRAINAGE NOTES (GENERAL)

1. THE CONTRACTOR SHALL MAINTAIN PROPER DRAINAGE AT ALL TIMES DURING THE COURSE OF CONSTRUCTION AND PREVENT STORM WATER FROM RUNNING INTO OR STANDING IN EXCAVATED AREAS.
2. DURING EXTENDED DRY PERIODS, THE CONSTRUCTION AREA(S) MAY NEED TO BE WATERED DOWN TO PREVENT THE BLOWING OF SOIL FROM THE SITE.
3. DURING CONSTRUCTION, A STABILIZED CONSTRUCTION ENTRANCE SHALL BE UTILIZED TO MINIMIZE THE TRACKING OF DIRT ONTO THE PUBLIC STREETS. IT IS THE CONTRACTOR'S RESPONSIBILITY TO KEEP PUBLIC STREET PAVEMENT CLEAN OF DIRT AND DEBRIS. ANY DIRT THAT IS TRACKED ONTO THE PUBLIC STREETS SHALL BE REMOVED THE SAME DAY. IF THE AMOUNT TRACKED ON THE PUBLIC STREET IS EXCESSIVE, CLEANING MAY BE REQUIRED MORE FREQUENTLY.

Erosion Control and Drainage Notes (Project Specific)

1. ALL EROSION CONTROL MEASURES SHALL BE PROPERLY INSTALLED, AS PERMITTED, PRIOR TO ANY LAND DISTURBANCE ACTIVITIES. ALL EROSION CONTROL SHALL BE MAINTAINED UNTIL TURF IS ESTABLISHED.
2. ACCEPTABLE PERIMETER EROSION CONTROL INCLUDES SILT FENCE, SILT WORM AND ANY OTHER APPLICATION APPROVED BY THE CITY ENGINEER.
3. ALL OPEN GRATE STRUCTURES SHALL HAVE EROSION CONTROL PROTECTION IN ACCORDANCE WITH THE APPROVED EROSION CONTROL PLANS. STRAW BALES SHALL NOT BE USED.
4. STOCKPILES NOT BEING DISTURBED FOR MORE THAN 14 DAYS SHALL BE SEEDED.
5. ALL EROSION CONTROL MEASURES SHALL BE INSPECTED WEEKLY, AFTER ANY 0.5 INCH OR GREATER RAINFALL, OR MORE FREQUENTLY AS NECESSARY TO MAINTAIN THEIR FUNCTION.

EROSION CONTROL AND DRAINAGE NOTES (NPDES PERMIT)

1. IT IS THE RESPONSIBILITY OF THE OWNER OR HIS DESIGNEE TO INSPECT ALL TEMPORARY EROSION CONTROL MEASURES PER THE REQUIREMENTS OF THE NPDES PERMIT AND CORRECT ANY DEFICIENCIES AS NEEDED.

Geometric and Paving Notes (General)

1. THE DEVELOPER AND CONTRACTOR SHALL HAVE THE RESPONSIBILITY TO ADEQUATELY PROTECT THE PAVEMENT AND PROPERTY, CURB AND GUTTER AND OTHER RIGHT-OF-WAY IMPROVEMENTS, WHETHER NEWLY CONSTRUCTED OR EXISTING, FROM ANY AND ALL DAMAGE. SUFFICIENT MEANS SHALL BE EMPLOYED BY THE CONTRACTOR TO PROTECT AGAINST SUCH DAMAGE TO THE SATISFACTION OF THE CITY ENGINEER.
2. ANY NEW OR EXISTING IMPROVEMENTS THAT ARE DAMAGED SHALL BE REPAIRED OR REPLACED IN A MANNER THAT IS SATISFACTORY TO THE CITY ENGINEER.
3. THE CONTRACTOR AND/OR DEVELOPER SHALL SECURE ALL NECESSARY RIGHTS AND PERMISSIONS TO PERFORM ANY WORK ON PRIVATE PROPERTY NOT WITHIN THE OWNERSHIP RIGHTS OF THE DEVELOPER. THE DEVELOPER SHALL BEAR THE SOLE RESPONSIBILITY FOR DAMAGES THAT MAY OCCUR AS A RESULT OF WORK PERFORMED UNDER CONTRACTS THEY INITIATE.
4. THE CONTRACTOR/DEVELOPER WILL BE RESPONSIBLE FOR BRINGING PAVEMENTS (STREET, CURB AND GUTTER, SIDEWALK, DRIVEWAY) ON THE PROPERTY UP TO CITY STANDARDS INCLUDING ANY REPAIRS TO SUBSTANDARD PAVEMENTS THAT EXISTED PRIOR TO OR OCCURRED DURING CONSTRUCTION.
5. WHEREVER NEW WORK WILL MEET EXISTING CONDITIONS OTHER THAN LAWN AREAS, REGARDLESS OF WHETHER THE NEW OR EXISTING WORK IS ASPHALT OR CONCRETE, THE EXISTING ADJACENT SIDEWALK, DRIVEWAYS, PAVEMENT OR CURB SHALL BE NEATLY SAW CUT. THE SAW CUT SHALL BE IN A NEAT STRAIGHT LINE SUFFICIENTLY DEEP SO THAT IT RENDERS A SMOOTH VERTICAL FACE TO MATCH TO. IF THE CONTRACTOR IS NOT CAREFUL OR DOES NOT SAW DEEP ENOUGH AND THE CUT LINE BREAKS OUT OR CHIPS TO AN IMPERFECT EDGE, THEN THE EXISTING SIDE MUST BE RE-CUT SQUARE AND DONE OVER UNTIL IT IS CORRECT.
6. ALL PAVEMENT PATCHES WITHIN THE PUBLIC RIGHT-OF-WAY MUST CONFORM TO CITY STANDARDS. REFERENCE NAPERVILLE STANDARD DETAILS 590.12 AND 590.13.

TRAFFIC CONTROL AND PROTECTION NOTES (GENERAL)

1. ALL DEVELOPERS AND CONTRACTORS SHALL PROVIDE SUITABLE TRAFFIC CONTROL FOR THEIR CONSTRUCTION ACTIVITIES IN ACCORDANCE WITH PART 6 OF THE MANUAL ON UNIFORM TRAFFIC CONTROL DEVICES (MUTCD), LATEST EDITION. TRAFFIC CONTROL MUST BE PROVIDED FOR ANY ACTIVITY THAT IMPACTS TRAFFIC FLOW. THIS INCLUDES, BUT IS NOT LIMITED TO, ROAD CLOSURES REQUIRING DETOURS, DAILY LANE CLOSURES, LONG TERM LANE CLOSURES, NARROW LANES, AND CONSTRUCTION VEHICLES ENTERING AND EXITING THE PUBLIC ROADWAY. ALL TRAFFIC CONTROL SET-UPS MAY BE INSPECTED BY THE CITY OF NAPERVILLE TO ENSURE THAT THEY ARE PROVIDING POSITIVE GUIDANCE TO MOTORISTS AND ARE NOT IN THEMSELVES PRESENTING A HAZARDOUS SITUATION. A REPRESENTATIVE OF THE DEVELOPER OR CONTRACTOR MUST PROVIDE PHONE NUMBERS AT WHICH THEY CAN BE REACHED 24 HOURS A DAY AND ON WEEKENDS SO THAT THEY CAN MAINTAIN TRAFFIC CONTROL DEVICES.
2. PEDESTRIANS MUST BE PROVIDED WITH A SAFE ALTERNATE ROUTE IF PEDESTRIAN FACILITIES ARE TO BE CLOSED AS A RESULT OF CONSTRUCTION ACTIVITIES. GUIDANCE MUST BE PROVIDED TO PEDESTRIANS SO THAT THEY MAY AVOID THE WORK ZONE. SAID PEDESTRIAN DETOUR PLAN (WITH SIGNAGE) IS TO BE REVIEWED AND ACCEPTED BY THE CITY IN WRITING, PRIOR TO THE COMMENCEMENT OF THE WORK.
3. THE CONTRACTOR SHALL EMPLOY THE APPROPRIATE METHODS OF TRAFFIC CONTROL IN ACCORDANCE WITH THE PLANS, SPECIFICATIONS AND THE MANUAL ON UNIFORM TRAFFIC CONTROL DEVICES, SUCH THAT THE SAFETY OF VEHICLES, AND PEDESTRIANS IS PRESERVED AT ALL TIMES. THE ERECTION AND MAINTENANCE OF THE TRAFFIC CONTROL DEVICES SHALL BE TO THE SATISFACTION OF THE AGENCY OF JURISDICTION AND THE CITY ENGINEER.
4. ANY TEMPORARY OPEN HOLES SHOULD BE BARRICADED AND PROTECTED IN ACCORDANCE WITH APPLICABLE STANDARDS.

WATER UTILITES GENERAL NOTES

a. NEW WATER MAIN VALVES, INCLUDING PRESSURE TAP VALVES, ADJACENT TO AN EXISTING WATER MAIN, AND EXISTING WATER MAIN VALVES SHALL ONLY BE OPERATED BY THE CITY OF NAPERVILLE, DEPARTMENT OF PUBLIC UTILITIES CEE/CM DIVISION PERSONNEL WITH 48-HOUR NOTICE (MONDAY-FRIDAY). CONTACT NAPERVILLE TED BUSINESS GROUP AT 630-420-6082 FOR SCHEDULING.

b. ANY EXISTING UTILITY STRUCTURES REQUIRING ADJUSTMENT OR RECONSTRUCTION SHALL BE COMPLETED BY THE CONTRACTOR TO THE SATISFACTION OF THE UTILITY OWNER. ADJUSTMENTS AND/OR RECONSTRUCTIONS NOT CALLED FOR ON THE PLANS SHALL BE CONSIDERED INCIDENTAL TO THE CONTRACT. NO MORE THAN A TOTAL OF 12 INCHES OF ADJUSTING RINGS AND/OR 2 ADJUSTING RINGS SHALL BE ALLOWED. ALL STRUCTURE FRAMES SHALL BE FLUSH WITH FINAL GRADE.

c. TREES SHALL BE INSTALLED A MINIMUM OF FIVE (5) FEET HORIZONTALLY FROM UNDERGROUND ELECTRICAL FEEDERS, SANITARY SEWERS, SANITARY SERVICES, WATER MAINS, AND WATER SERVICES. TREES SHALL BE INSTALLED A MINIMUM OF TEN (10) FEET HORIZONTALLY FROM UTILITY STRUCTURES AND APPURTENANCES, INCLUDING, BUT NOT LIMITED TO, MANHOLES, VALVE VAULTS, VALVE BOXES AND FIRE HYDRANTS. NO TREES, SHRUBS OR OBSTACLES WILL BE ALLOWED 10' IN FRONT OF, 5' ON THE SIDES, AND 7' TO THE REAR OF THE ELECTRICAL TRANSFORMER.

d. ALL RETAINER GLANDS WHEN REQUIRED TO RESTRAIN VALVES, FITTINGS, HYDRANTS, AND PIPE JOINTS SHALL BE MECHANICAL JOINT WEDGE ACTION TYPE MEGALUG 1100 SERIES AS MANUFACTURED BY EBBA IRON, INC. OR UNI-FLANGE BLOCKBUSTER 1400 SERIES AS MANUFACTURED BY FORD METER BOX CO. AND SHALL BE FOR USE ON DUCTILE IRON PIPE CONFORMING TO ANSI/AWWA C151/A21.51, FOR NOMINAL PIPE SIZES 3" THROUGH 48".

e. EXISTING DUCTILE IRON SYSTEMS FOR RESTRAINING PUSH-ON PIPE BELLS SHALL BE MEGALUG SERIES 1100HD OR FORD SERIES 1390.

f. EXISTING DUCTILE IRON SYSTEMS REQUIRING RESTRAINT SHALL BE MEGALUG SERIES 1100SD (SPLIT MEGALUG) FOR MECHANICAL JOINTS.

g. DUCTILE IRON WATER MAIN TO BE CLASS 52. ALL DUCTILE IRON PIPE IS TO BE ENCASED IN POLYETHYLENE FILM POLYETHYLENE ENCASEMENT TO BE INSTALLED IN ACCORDANCE WITH ANSI/AWWA C105/A21.5-05.

h. A SET OF AS-BUILT RECORD DRAWING SHALL BE GIVEN TO THE CITY OF NAPERVILLE UPON COMPLETION OF IMPROVEMENTS SHOWING THE ELEVATION AND LOCATION (TIED TO TWO POINTS) OF ALL NEW AND EXISTING STRUCTURES INCLUDING FIRE HYDRANTS, VALVE BOXES AND VAULTS, LINESTOP SLEEVES, WATER SERVICE CORPORATION STOPS, WATER MAIN FITTINGS/BENDS, MANHOLES, SANITARY SERVICE WYES (MEASURED FROM DOWNSTREAM MANHOLE), AND ABANDONED WATER OR SANITARY SERVICE LINES. ALL ELEVATIONS SHOULD BE REFERENCED TO THE SAME BENCHMARK DATUM AS THE ORIGINAL DESIGN PLANS. HORIZONTAL TIES SHALL BE REFERENCED TO LOT LINES, BACK OF CURB, OR PROPERTY CORNERS.

i. ALL SANITARY SEWER PIPING SHALL BE PVC PIPE MEETING THE REQUIREMENTS OF ASTM D-2241 WITH JOINTS CONFORMING TO ASTM D-3139. ALL SANITARY SEWER FITTINGS SHALL BE PVC MEETING THE FOLLOWING REQUIREMENTS: 4" TO 12" SHALL BE INJECTION MOLDED FITTINGS MEETING ASTM D-2241. GREATER THAN 12" SHALL BE FABRICATED FITTINGS MEETING ASTM D-2241 OR C905. MINIMUM PRESSURE RATING SHALL BE 150 PSI.

j. THE VALVES LESS THAN 16" SHALL BE STANDARD PATTERN, GATE VALVES AND SHALL HAVE THE NAME OR MARK OF THE MANUFACTURER, SIZE AND WORKING PRESSURE PLAINLY CAST IN RAISED LETTERS ON THE VALVE BODY. VALVES MAY BE APPROVED FROM ONE OF THE FOLLOWING MANUFACTURERS: AMERICAN, CLOW, WATEROUS OR KENNEDY.

k. STAINLESS STEEL NUTS, BOLTS/T-BOLTS, AND WASHERS, TYPE 304 OR BETTER, WILL BE REQUIRED ON ALL WATER MAIN INSTALLATIONS. THIS WOULD APPLY TO HYDRANTS, TAPPING SLEEVES, VALVES, FITTINGS, RESTRAINT, AND OTHER APPURTENANCES BURIED OR IN VALVE VAULTS. MECHANICAL JOINTS AND RESTRAINT GLANDS REQUIRE 304 STAINLESS STEEL T-BOLTS. AN ANTI-SEIZE COMPOUND SHALL BE FACTORY APPLIED TO NUTS OR BOLTS – ANY DAMAGE TO THIS COATING SHALL BE REPAIR WITH FIELD APPLIED APPROVED ANTI-SEIZE COMPOUND THAT IS A MOLYBDENUM-BASE LUBRICANT, BOSTIK NEVER-SEEZ OR APPROVED EQUAL.

l. THE CONTRACTOR SHALL ROTATE AND/OR ADJUST ANY EXISTING AND/OR NEW HYDRANT TO THE SATISFACTION OF THE DEPARTMENT OF PUBLIC UTILITIES.

m. WATER MAINS SHALL BE SUBJECTED TO A HYDROSTATIC/LEAKAGE TEST IN ACCORDANCE WITH NAPERVILLE STANDARD SPECIFICATIONS. TEST PRESSURE SHALL BE NO LESS THAN 150 PSI FOR A PERIOD OF 4 HOURS AND NOT VARY BY MORE THAN + 5 PSI. DURING THE TEST. THE TEST GAUGE SHALL BE APPROVED BY THE CITY AND SHALL BE GLYCERIN OR OIL FILLED, WITH A RANGE OF NOT MORE THAN 200 PSI AND INCREMENTS NOT GREATER THAN 5 PSI, 4 " MINIMUM DIAL SIZE. WATER RECOVERY TEST SHALL BE COMPLETED AT THE END OF THE TESTING PERIOD TO SHOW ACTUAL LEAKING AND THAT THE WATER MAIN DID NOT HAVE TOO MUCH TRAPPED AIR IN THE TESTED SECTION.

n. THE CITY OF NAPERVILLE PUBLIC UTILITIES DOES NOT GUARANTEE THAT ANY VALVE OR FITTING IN THE EXISTING WATER DISTRIBUTION SYSTEM WILL HOLD AGAINST A HYDROSTATIC/LEAKAGE TEST. THE CONTRACTOR IS SOLELY RESPONSIBLE FOR PROVIDING AND ACCEPTABLE PRESSURE TEST WHICH SHALL INCLUDE PROVISIONS AROUND EXISTING VALVES AND FITTINGS.

o. FIRE HYDRANT SHOULD BE BAGGED "NOT IN SERVICE" UNTIL ALL TESTING AND DISINFECTION HAS BEEN COMPLETED AND NEW WATER MAIN SECTION IS SERVICE.

p. SANITARY SEWER AND WATER SHALL BE CONSTRUCTED, TESTED, AND PLACED INTO SERVICE IN ACCORDANCE WITH CITY OF NAPERVILLE STANDARD SPECIFICATION AND SPECIFICATIONS FOR WATER AND SEWER MAIN CONSTRUCTION IN ILLINOIS, LATEST EDITION.

q. ALL VALVE BOXES, VAULTS, HYDRANTS, AND MANHOLES SHALL NOT BE COVERED WITH CONSTRUCTION DEBRIS AND SHALL REMAIN ACCESSIBLE TO THE RESPECTIVE UTILITY COMPANY.

r. WATER SERVICE LINE SMALLER THAN 3" SHALL BE TYPE K COPPER. IF JOINTS ARE REQUIRED DUE TO LENGTH OF SERVICE, THEN ONLY COMPRESSION TYPE COUPLING SHALL BE PERMITTED. NO SOLDERED OR FLARED TYPE JOINTS ARE ALLOWED.

s. ALL SANITARY MANHOLES SHALL BE TESTED FOR LEAKAGE BY VACUUM TESTING. THE MANHOLE FRAME AND ADJUSTING RINGS SHALL BE IN PLACE WHEN TESTING. ANY LEAKS SHALL BE REPAIRED FROM EXTERIOR OF MANHOLE – PATCHING INSIDE OF MANHOLE SHALL NOT BE ACCEPTABLE. A VACUUM OF 10" (254 MM) HG SHALL BE PLACE ON THE MANHOLE AND THE TIME SHALL BE MEASURED FOR THE VACUUM TO DROP TO 9" (229 MM) HG. THE VACUUM SHALL NOT DROP BELOW 9" (229 MM) HG FOR THE FOLLOWING TIME PERIODS FOR EACH SIZE OF MANHOLE:
   - a) 48-INCH DIAMETER - 60 SECONDS
   - b) 60-INCH DIAMETER - 75 SECONDS
   - c) 72-INCH DIAMETER - 90 SECONDS
   - d) 84-INCH DIAMETER - 105 SECONDS

   ANY MANHOLES THAT FAIL THE TEST SHALL BE SEALED AND RE-TESTED UNTIL ACCEPTABLE.

t. THE CONTRACTOR SHALL PROVIDE INTERNAL TELEVISED INSPECTION OF ALL INSTALLED SANITARY SEWER, LATERALS, MANHOLES AND CONNECTIONS TO THE PUBLIC SYSTEM. FOLLOWING COMPLETION OF TELEVISING WORK, THE CONTRACTOR SHALL SUBMIT VIDEO RECORDINGS ON DVD OR FLASH DRIVE ALONG WITH A COMPREHENSIVE TELEVISING REPORT WHICH WILL INDICATE THE LOCATION, FOOTAGES AND NATURE OF ANY DEFECTS. PRIOR TO FINAL ACCEPTANCE, THESE DEFECTS SHALL BE REPAIRED TO THE SATISFACTION OF THE WATER/WASTEWATER UTILITY AND RE-TELEVISED.

u. CONTRACTOR WORK HOURS ARE ONLY ALLOWED FROM 7:00 A.M. TO 5:00 P.M., MONDAY THROUGH SATURDAY. NO WORK SHALL BE PERMITTED ON SUNDAYS.

v. SANITARY PIPES WITH LESS THAN 4 FEET OR MORE THAN 25 FEET OF COVER SHALL BE CONSTRUCTED OF DUCTILE IRON PIPING (CLASS 50, MINIMUM) AND ENCASED IN POLYWRAP.

w. ALL EXCAVATIONS MORE THAN 20 FEET DEEP MUST BE PROTECTED BY A SYSTEM DESIGNED BY A REGISTERED PROFESSIONAL ENGINEER.

x. CONTRACTOR SHALL MAINTAIN 2' MINIMUM CLEARANCE BETWEEN EXISTING UTILITIES AND NEW FOUNDATIONS AND UNDERGROUND FACILITIES. IN AREAS WHERE FOUNDATIONS AND UNDERGROUND FACILITIES ARE PROPOSED ADJACENT TO EXISTING UTILITIES, THE CONTRACTOR SHALL POT HOLE BY VACUUM EXCAVATION OR HAND EXCAVATION TO LOCATE THE EXISTING UTILITY TO VERIFY MINIMUM CLEARANCE REQUIREMENT.

y. FENCES SHALL BE INSTALLED A MINIMUM OF 5 FEET FROM ANY WATER OR SANITARY MAINS WHEN RUNNING PARALLEL WITH THEM. WHERE FENCES ARE INSTALLED CROSSING WATER OR SANITARY MAINS, THE POSTS SHALL BE LOCATED TO HAVE THE MAIN BETWEEN THEM.

z. ALL BRASS COMPONENTS SHALL BE CERTIFIED TO BE LEAD FREE IN COMPLIANCE WITH NSF 61 AND NSF 372 AND IDENTIFIED WITH APPLICABLE MARKINGS.

aa. SANITARY FORCE MAIN - FORCE MAN SHALL BE TESTED A MINIMUM OF 1 HOUR AT 1.5 THE SHUT OFF HEAD OF THE PUMP, 2.5 TIMES THE OPERATING PRESSURE, OR 20 PSI WHICHEVER IS GREATEST. ALLOWABLE LEAKAGE SHALL BE IN ACCORDANCE WITH SECTION 41-2.14C OF THE STANDARD SPECIFICATIONS FOR WATER AND SEWER CONSTRUCTION.

2200 CABOT DRIVE
SUITE 325
LISLE, IL 60532
P: 630.598.0007
WWW.CAGECIVIL.COM

CAGE CIVIL ENGINEERING

FREDERICK W. THAETE
062-055840
LICENSED PROFESSIONAL ENGINEER OF ILLINOIS
EXP. 11/30/2025

REVISIONS

2	06/25/2025	CITY RESUBMITTAL
1	05/23/2025	CITY RESUBMITTAL

THIS DESIGN AND THESE DRAWINGS ARE THE PROPERTY OF CAGE ENGINEERING, INC. NO PART OF THIS WORK MAY BE REPRODUCED WITHOUT PRIOR WRITTEN PERMISSION FROM CAGE ENGINEERING, INC.

M/I HOMES OF CHICAGO, LLC

NORTHWOODS OF NAPERVILLE

1151 WARRENVILLE ROAD
NAPERVILLE, IL 60563

PROJ NO: 240255
ENG : DJB
DATE : 07/07/2025

SHEET TITLE

CITY OF NAPERVILLE NOTES & SPECIFICATIONS

SHEET NUMBER

C0.2

EXHIBIT C

DEMOLITION LEGEND

- BUILDING DEMOLITION
- BITUMINOUS PAVEMENT REMOVAL, FULL DEPTH
- CONCRETE PAVEMENT / SIDEWALK REMOVAL, FULL DEPTH
- SAWCUT PAVEMENT, FULL DEPTH
- CURB & GUTTER REMOVAL
- UTILITY REMOVAL
- TREE/BUSH REMOVAL
- UTILITY STRUCTURE REMOVAL
- (TBR) TO BE REMOVED

IMPERVIOUS REMOVAL SUMMARY

ASPHALT REMOVAL = 96,418 SF

SIDEWALK REMOVAL = 5,595 SF

CURB & GUTTER REMOVAL = 2,313 LF X 1.5 = 3,470 SF

BUILDING REMOVAL = 22,265 SF

TOTAL IMPERVIOUS REMOVAL = 127,748 SF

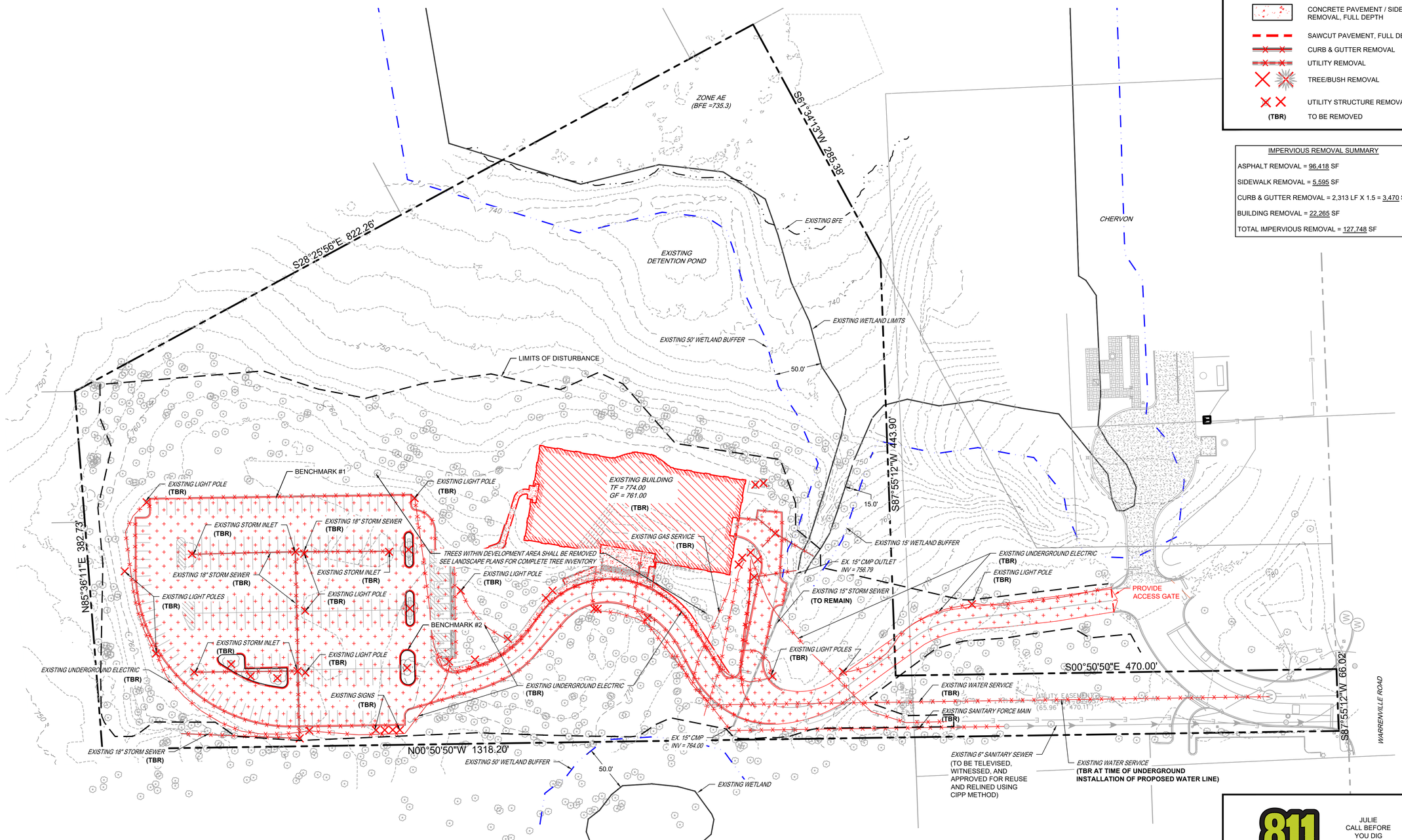

SOURCE BENCHMARK

DUPAGE COUNTY 0167
NGS PID: DK3215
(BRASS DISC)
ELEVATION: 759.889 (NAVD 88')
(N 41° 48.535 W 088° 08.335)

TO REACH THE STATION FROM THE INTERSECTION OF SR 53 AND WARRENVILLE ROAD GO WEST ALONG WARRENVILLE ROAD FOR APPROXIMATELY 3.2 MI TO THE STATION ON THE LEFT. THE STATION IS LOCATED ALONG THE SOUTH SIDE OF WARRENVILLE ROAD, EAST OF THE T INTERSECTION WITH WASHINGTON STREET. THE STATION IS 70.2 FT WEST OF A LIGHT POLE, 39.4 FT NORTHWEST OF AN ELECTRIC TRANSFORMER BOX, AND 23.0 FT SOUTH OF THE CENTERLINE OF EASTBOUND WARRENVILLE ROAD. THE MONUMENT IS A 3.5 INCH BRASS DISK ON THE EAST END OF A RETAINING WALL ALONG THE SOUTH SIDE OF WARRENVILLE ROAD. THE MONUMENT IS 3.0 FT ABOVE ROAD GRADE.

ON-SITE BENCHMARK #1

CROSS-CUT ON TOP OF CURB
ELEV. = 765.90

ON-SITE BENCHMARK #2

CROSS-CUT ON TOP OF CURB
ELEV. = 769.50

JULIE
CALL BEFORE
YOU DIG
811

0 50' 100'
1" = 50' (HORIZONTAL)

2200 CABOT DRIVE
SUITE 325
LISLE, IL 60532
P: 630.598.0007
WWW.CAGECIVIL.COM

CAGE CIVIL ENGINEERING

FREDERICK W. THAETE
062-055840
LICENSED PROFESSIONAL ENGINEER
OF ILLINOIS
EXP. 11/30/2025

REVISIONS

1 08/25/2025 CITY RESUBMITTAL
2 05/23/2025 CITY RESUBMITTAL

THIS DESIGN AND THESE DRAWINGS ARE THE PROPERTY OF CAGE ENGINEERING, INC. NO PART OF THIS WORK MAY BE REPRODUCED WITHOUT PRIOR WRITTEN PERMISSION FROM CAGE ENGINEERING, INC.

M/I HOMES OF CHICAGO, LLC
NORTHWOODS OF NAPERVILLE
1151 WARRENVILLE ROAD
NAPERVILLE, IL 60563

PROJ NO: 240255
ENG : DJB
DATE : 07/07/2025

SHEET TITLE
EXISTING CONDITIONS & DEMOLITION PLAN

SHEET NUMBER
C1.0
4 OF 32

EXHIBIT C

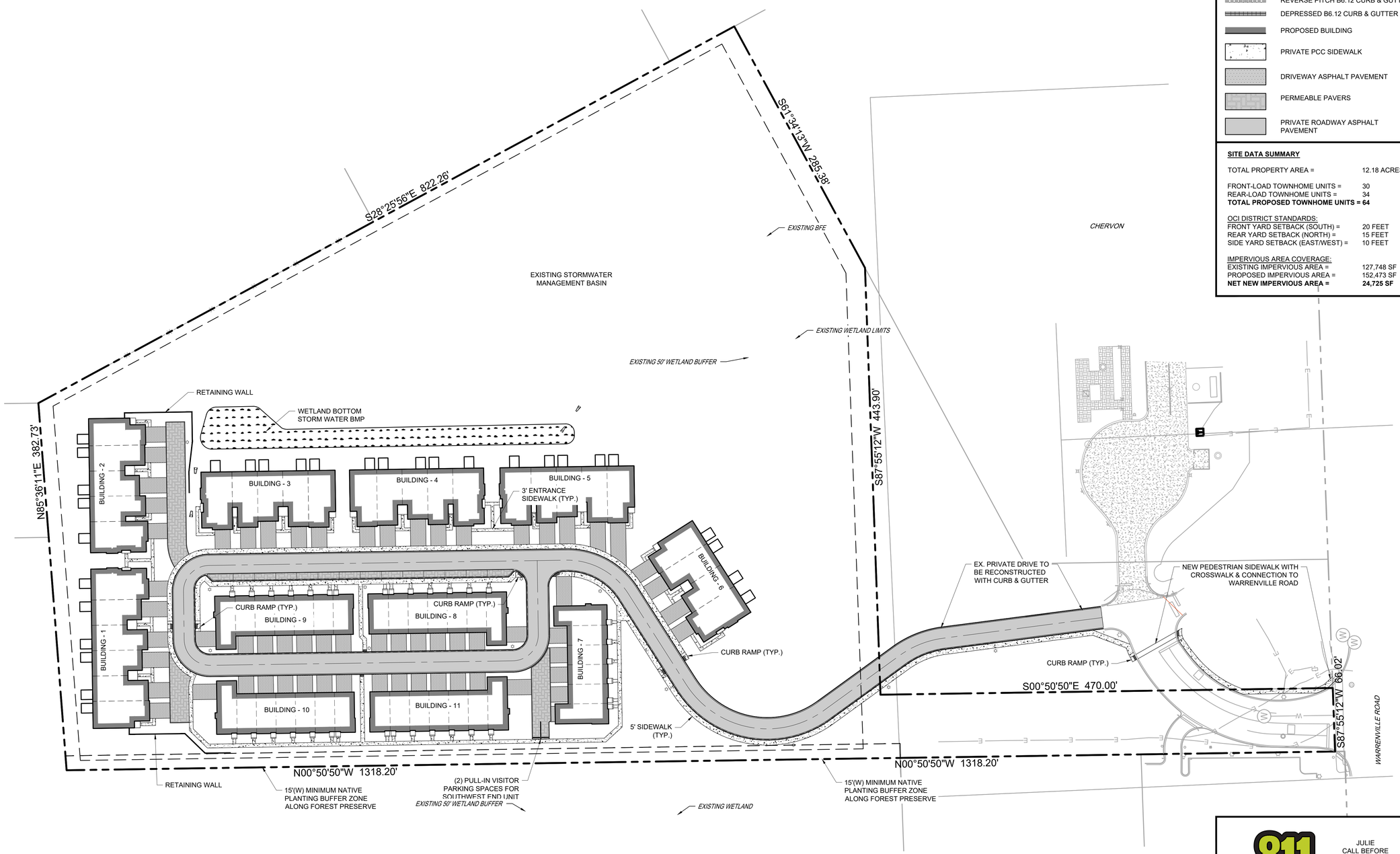

PAVEMENT LEGEND

- STANDARD PITCH M3.12 CURB & GUTTER
- REVERSE PITCH M3.12 CURB & GUTTER
- STANDARD PITCH B6.12 CURB & GUTTER
- REVERSE PITCH B6.12 CURB & GUTTER
- DEPRESSED B6.12 CURB & GUTTER
- PROPOSED BUILDING
- PRIVATE PCC SIDEWALK
- DRIVEWAY ASPHALT PAVEMENT
- PERMEABLE PAVERS
- PRIVATE ROADWAY ASPHALT PAVEMENT

SITE DATA SUMMARY

TOTAL PROPERTY AREA =	12.18 ACRES
FRONT-LOAD TOWNHOME UNITS =	30
REAR-LOAD TOWNHOME UNITS =	34
TOTAL PROPOSED TOWNHOME UNITS = 64	
OCI DISTRICT STANDARDS:	
FRONT YARD SETBACK (SOUTH) =	20 FEET
REAR YARD SETBACK (NORTH) =	15 FEET
SIDE YARD SETBACK (EAST/WEST) =	10 FEET
IMPERVIOUS AREA COVERAGE:	
EXISTING IMPERVIOUS AREA =	127,748 SF
PROPOSED IMPERVIOUS AREA =	152,473 SF
NET NEW IMPERVIOUS AREA =	**24,725 SF**

JULIE CALL BEFORE YOU DIG 811

0 164.042 328.084
1"=164.042' (HORIZONTAL)

2200 CABOT DRIVE
SUITE 325
LISLE, IL 60532
P: 630.590.0007
WWW.CAGECIVIL.COM

CAGE CIVIL ENGINEERING

FREDERICK W. THAETE
062-055840
LICENSED PROFESSIONAL ENGINEER OF ILLINOIS
EXP. 11/30/2025

REVISIONS

2 06/25/2025 CITY RESUBMITTAL
1 05/23/2025 CITY RESUBMITTAL

THIS DESIGN AND THESE DRAWINGS ARE THE PROPERTY OF CAGE ENGINEERING, INC. NO PART OF THIS WORK MAY BE REPRODUCED INTIRALY PRIOR WRITTEN PERMISSION FROM CAGE ENGINEERING, INC.

M/I HOMES OF CHICAGO, LLC

NORTHWOODS OF NAPERVILLE

1151 WARRENVILLE ROAD
NAPERVILLE, IL 60563

PROJ NO: 240255
ENG : DJB
DATE : 07/07/2025

SHEET TITLE

SITE DIMENSIONAL & PAVING PLAN

SHEET NUMBER

C2.0

5 OF 32

EXHIBIT C

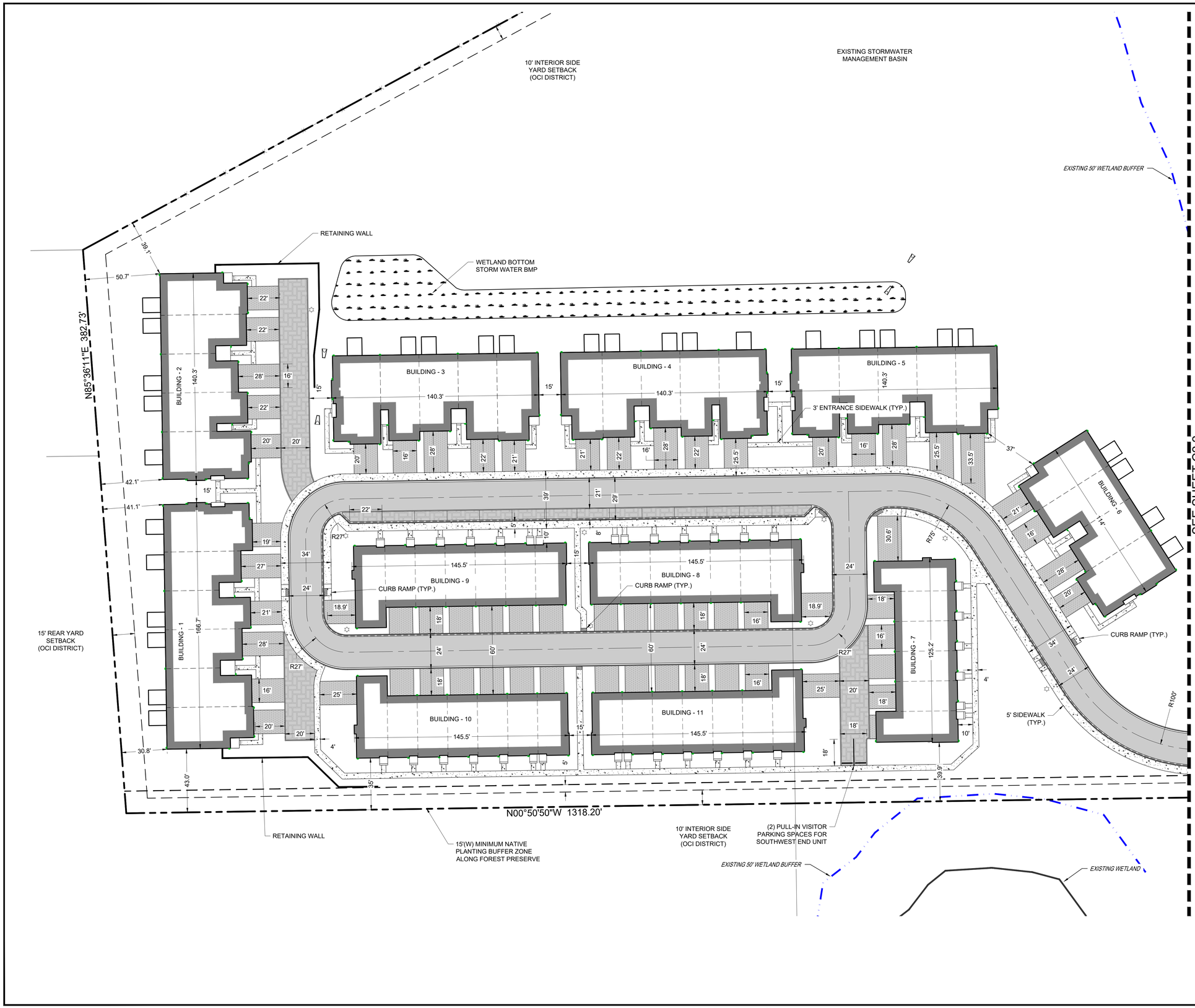

PAVEMENT LEGEND

- STANDARD PITCH M3.12 CURB & GUTTER
- REVERSE PITCH M3.12 CURB & GUTTER
- STANDARD PITCH B6.12 CURB & GUTTER
- REVERSE PITCH B6.12 CURB & GUTTER
- DEPRESSED B6.12 CURB & GUTTER
- PROPOSED BUILDING
- PRIVATE PCC SIDEWALK
- DRIVEWAY ASPHALT PAVEMENT
- PERMEABLE PAVERS
- PRIVATE ROADWAY ASPHALT PAVEMENT

SITE DATA SUMMARY

TOTAL PROPERTY AREA =	12.18 ACRES
FRONT-LOAD TOWNHOME UNITS =	30
REAR-LOAD TOWNHOME UNITS =	34
TOTAL PROPOSED TOWNHOME UNITS = 64	
OCI DISTRICT STANDARDS:	
FRONT YARD SETBACK (SOUTH) =	20 FEET
REAR YARD SETBACK (NORTH) =	15 FEET
SIDE YARD SETBACK (EAST/WEST) =	10 FEET
IMPERVIOUS AREA COVERAGE:	
EXISTING IMPERVIOUS AREA =	127,748 SF
PROPOSED IMPERVIOUS AREA =	152,473 SF
NET NEW IMPERVIOUS AREA =	**24,725 SF**

JULIE CALL BEFORE YOU DIG 811

0 30' 60'
1" = 30' (HORIZONTAL)

2200 CABOT DRIVE
SUITE 325
LISLE, IL 60532
P: 630.590.0007
WWW.CAGECIVIL.COM
CAGE CIVIL ENGINEERING

FREDERICK W. THAETE
062-055840
LICENSED PROFESSIONAL ENGINEER OF ILLINOIS
EXP 11/30/2025

REVISIONS △

△ 06/25/2025 CITY RESUBMITTAL
△ 05/23/2025 CITY RESUBMITTAL

THIS DESIGN AND THESE DRAWINGS ARE THE PROPERTY OF CAGE ENGINEERING, INC. AND MAY NOT BE REPRODUCED OR REPRODUCED WITHOUT PRIOR WRITTEN PERMISSION FROM CAGE ENGINEERING, INC.

M/I HOMES OF CHICAGO, LLC
NORTHWOODS OF NAPERVILLE
1151 WARRENVILLE ROAD
NAPERVILLE, IL 60563

PROJ NO: 240255
ENG : DJB
DATE : 07/07/2025

SHEET TITLE
DETAILED SITE DIMENSIONAL & PAVING PLAN

SHEET NUMBER
C2.1
6 OF 32

EXHIBIT C

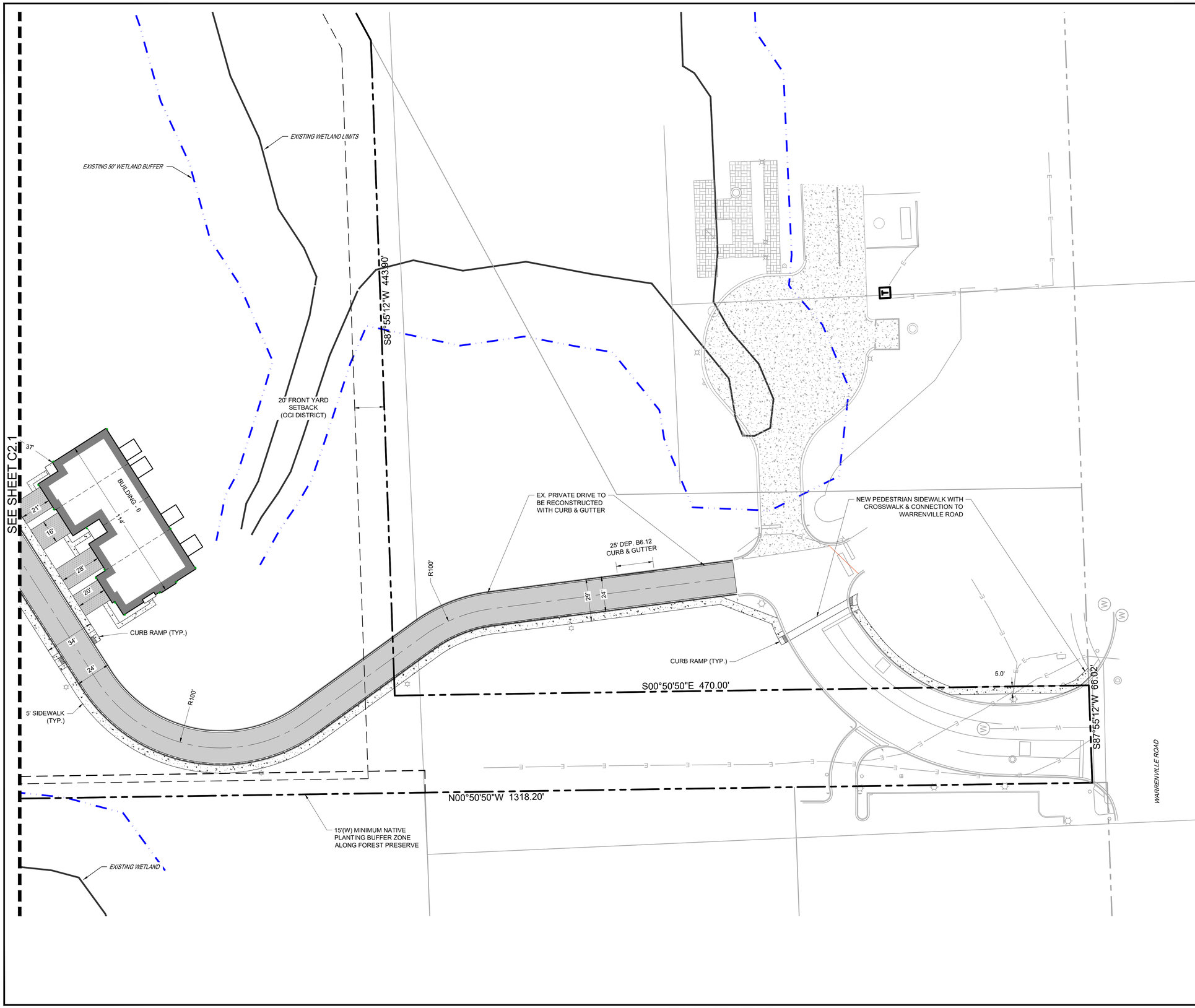

PAVEMENT LEGEND

- STANDARD PITCH M3.12 CURB & GUTTER
- REVERSE PITCH M3.12 CURB & GUTTER
- STANDARD PITCH B6.12 CURB & GUTTER
- REVERSE PITCH B6.12 CURB & GUTTER
- DEPRESSED B6.12 CURB & GUTTER
- PROPOSED BUILDING
- PRIVATE PCC SIDEWALK
- DRIVEWAY ASPHALT PAVEMENT
- PERMEABLE PAVERS
- PRIVATE ROADWAY ASPHALT PAVEMENT

SITE DATA SUMMARY

TOTAL PROPERTY AREA =	12.18 ACRES
FRONT-LOAD TOWNHOME UNITS =	30
REAR-LOAD TOWNHOME UNITS =	34
TOTAL PROPOSED TOWNHOME UNITS = 64	
OCI DISTRICT STANDARDS:	
FRONT YARD SETBACK (SOUTH) =	20 FEET
REAR YARD SETBACK (NORTH) =	15 FEET
SIDE YARD SETBACK (EAST/WEST) =	10 FEET
IMPERVIOUS AREA COVERAGE:	
EXISTING IMPERVIOUS AREA =	127,748 SF
PROPOSED IMPERVIOUS AREA =	152,473 SF
NET NEW IMPERVIOUS AREA =	**24,725 SF**

JULIE
CALL BEFORE
YOU DIG
811

0 30' 60'
1" = 30' (HORIZONTAL)

2200 CABOT DRIVE
SUITE 325
LISLE, IL 60532
P: 630.598.0007
WWW.CAGECIVIL.COM
CAGE CIVIL ENGINEERING

FREDERICK W. THAETE
062-055840
LICENSED PROFESSIONAL ENGINEER OF ILLINOIS
EXP. 11/30/2025

REVISIONS
1 06/25/2025 CITY RESUBMITTAL
2 05/23/2025 CITY RESUBMITTAL

THIS DESIGN AND THESE DRAWINGS ARE THE PROPERTY OF CAGE ENGINEERING, INC. NO PART OF THIS WORK MAY BE REPRODUCED WITHOUT PRIOR WRITTEN PERMISSION FROM CAGE ENGINEERING, INC.

M/I HOMES OF CHICAGO, LLC
NORTHWOODS OF NAPERVILLE
1151 WARRENVILLE ROAD
NAPERVILLE, IL 60563

PROJ NO: 240255
ENG : DJB
DATE : 07/07/2025

SHEET TITLE
DETAILED SITE DIMENSIONAL & PAVING PLAN

SHEET NUMBER
C2.2
7 OF 32

EXHIBIT C

GRADING LEGEND

1.0%	DRAINAGE ARROW
	OVERLAND FLOOD ROUTE
100.00 P	SPOT ELEVATION
100	PROPOSED MAJOR CONTOUR
100	PROPOSED MINOR CONTOUR
100	EXISTING MAJOR CONTOUR
100	EXISTING MINOR CONTOUR
W/O	WALKOUT UNIT (9'- 8" BELOW T/F)
L/O	LOOKOUT UNIT (4' - 8" BELOW T/F)

JULIE
CALL BEFORE
YOU DIG
811

0 50.0001 100.0002
1" = 50' (HORIZONTAL)

2200 CABOT DRIVE
SUITE 325
LISLE, IL 60532
P: 630.598.0007
WWW.CAGECIVIL.COM

CAGE CIVIL ENGINEERING

FREDERICK W. THIELE
062-055840
LICENSED PROFESSIONAL ENGINEER OF ILLINOIS
EXP 11/30/2025

REVISIONS

3 06/25/2025
CITY RESUBMITTAL
2 05/23/2025
CITY RESUBMITTAL
1

THIS DESIGN AND THESE DRAWINGS ARE THE PROPERTY OF CAGE ENGINEERING, INC. NO PART OF THIS WORK MAY BE REPRODUCED OR COPIED WITHOUT PRIOR WRITTEN PERMISSION FROM CAGE ENGINEERING, INC.

M/I HOMES OF CHICAGO, LLC

NORTHWOODS OF NAPERVILLE

1151 WARRENVILLE ROAD
NAPERVILLE, IL 60563

PROJ NO: 240255
ENG : DJB
DATE : 07/07/2025

SHEET TITLE
GRADING & DRAINAGE PLAN

SHEET NUMBER
C3.0
8 OF 32

EXHIBIT C

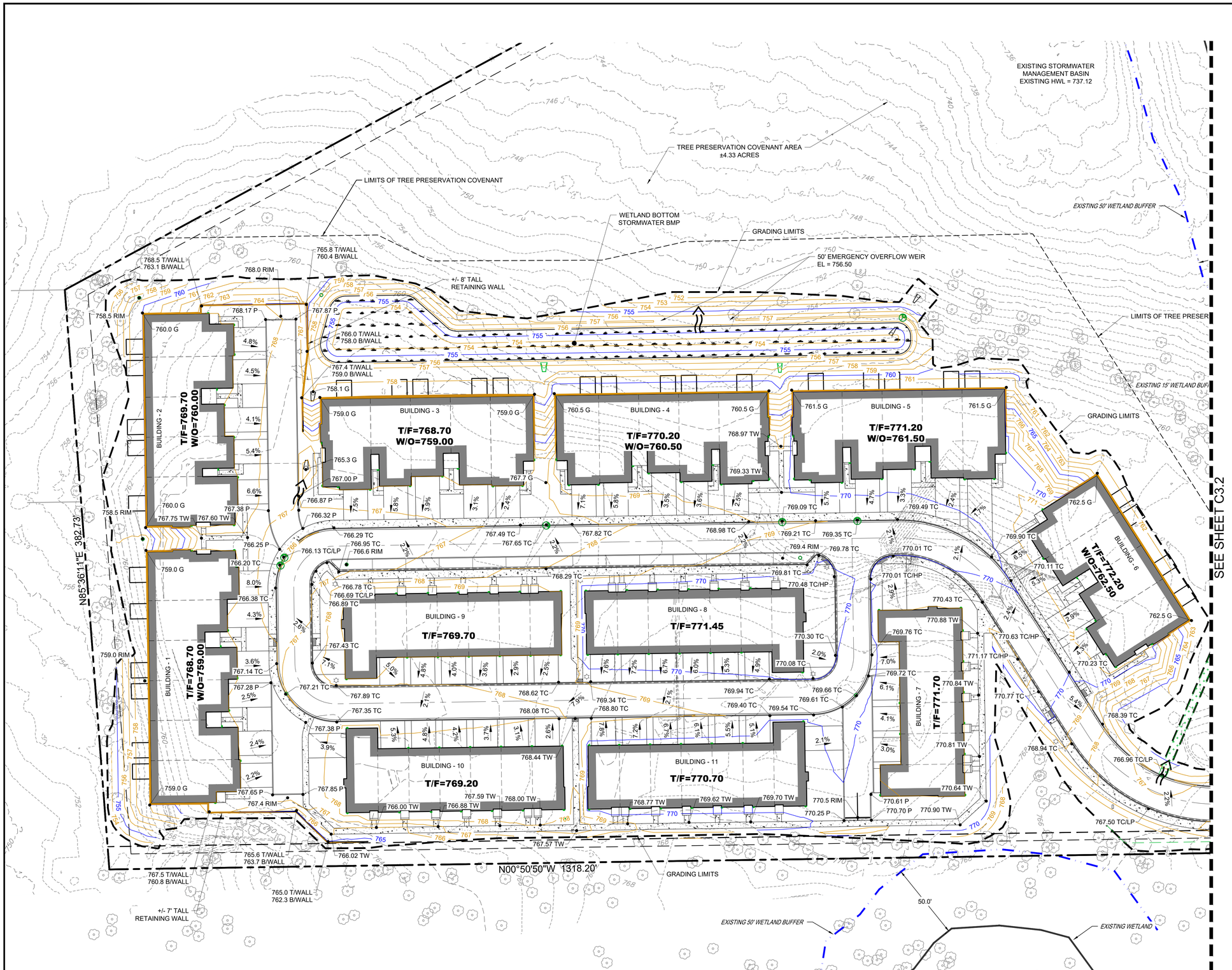

GRADING LEGEND

- 1.0% — DRAINAGE ARROW
- OVERLAND FLOOD ROUTE
- 100.00 P — SPOT ELEVATION
- 100 — PROPOSED MAJOR CONTOUR
- 100 — PROPOSED MINOR CONTOUR
- 100 — EXISTING MAJOR CONTOUR
- 100 — EXISTING MINOR CONTOUR
- W/O — WALKOUT UNIT (9'- 8" BELOW T/F)
- L/O — LOOKOUT UNIT (4' - 8" BELOW T/F)

POST-CONSTRUCTION BEST MANAGEMENT PRACTICES

BMP STORAGE VOLUME REQUIRED = 152,473 X 1.25" = 15,883 CF

PERMEABLE PAVER STORAGE VOLUME PROVIDED = 2,748 CF

WETLAND BOTTOM BMP STORAGE PROVIDED = 13,684 CF

TOTAL STORAGE VOLUME PROVIDED = 16,432 CF

2200 CABOT DRIVE
SUITE 325
LISLE, IL 60532
P: 630.590.0007
WWW.CAGECIVIL.COM

CAGE CIVIL ENGINEERING

FREDERICK W. THAETE
062-055840
LICENSED PROFESSIONAL ENGINEER
OF ILLINOIS
EXP 11/30/2025

REVISIONS

1 06/25/2025 CITY RESUBMITTAL
2 05/23/2025 CITY RESUBMITTAL

THIS DESIGN AND THESE DRAWINGS ARE THE PROPERTY OF CAGE ENGINEERING, INC. NO PART OF THIS WORK MAY BE REPRODUCED WITHOUT PRIOR WRITTEN PERMISSION FROM CAGE ENGINEERING, INC.

M/I HOMES OF CHICAGO, LLC

NORTHWOODS OF NAPERVILLE

1151 WARRENVILLE ROAD
NAPERVILLE, IL 60563

JULIE CALL BEFORE YOU DIG 811

PROJ NO: 240255
ENG : DJB
DATE : 07/07/2025

SHEET TITLE

DETAILED GRADING & DRAINAGE PLAN

0 30.0001 60.0001
1" = 30' (HORIZONTAL)

SHEET NUMBER

C3.1

9 OF 32

EXHIBIT C

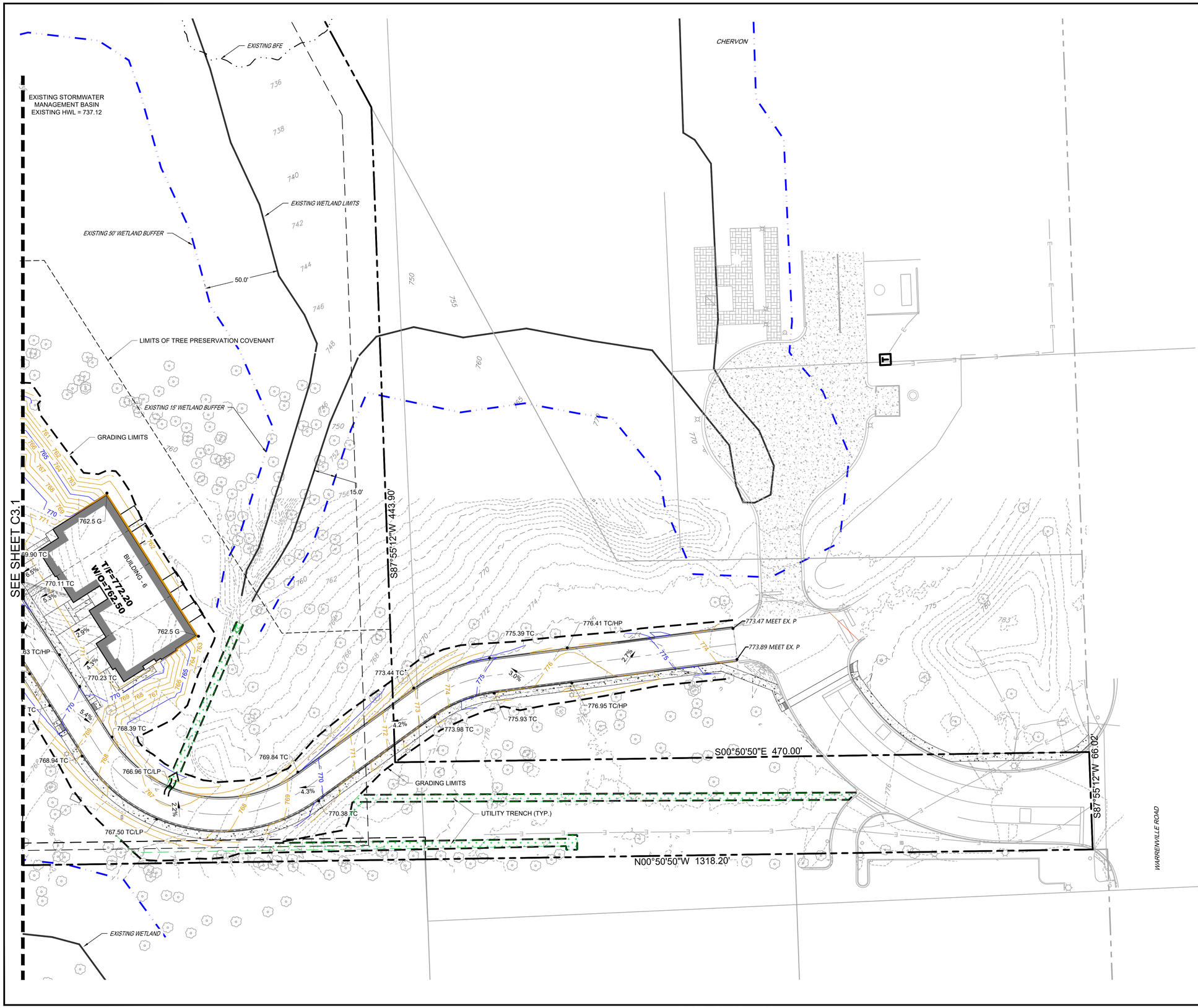

GRADING LEGEND

1.0%	DRAINAGE ARROW
	OVERLAND FLOOD ROUTE
100.00 P	SPOT ELEVATION
100	PROPOSED MAJOR CONTOUR
100	PROPOSED MINOR CONTOUR
100	EXISTING MAJOR CONTOUR
100	EXISTING MINOR CONTOUR
W/O	WALKOUT UNIT (9'- 8" BELOW T/F)
L/O	LOOKOUT UNIT (4' - 8" BELOW T/F)

2200 CABOT DRIVE
SUITE 325
LISLE, IL 60532
P: 630.590.0007
WWW.CAGECIVIL.COM

CAGE CIVIL ENGINEERING

FREDERICK W. THAETE
062-055840
LICENSED PROFESSIONAL ENGINEER OF ILLINOIS
EXP 11/30/2025

REVISIONS

1 06/25/2025 CITY RESUBMITTAL
2 05/23/2025 CITY RESUBMITTAL

THIS DESIGN AND THESE DRAWINGS ARE THE PROPERTY OF CAGE ENGINEERING, INC. NO PART OF THIS WORK MAY BE REPRODUCED WITHOUT PRIOR WRITTEN PERMISSION FROM CAGE ENGINEERING, INC.

M/I HOMES OF CHICAGO, LLC

NORTHWOODS OF NAPERVILLE

1151 WARRENVILLE ROAD
NAPERVILLE, IL 60563

JULIE
CALL BEFORE
YOU DIG
811

PROJ NO: 240255
ENG : DJB
DATE : 07/07/2025

SHEET TITLE

DETAILED GRADING & DRAINAGE PLAN

0 30.0001 60.0001
1" = 30' (HORIZONTAL)

SHEET NUMBER

C3.2

10 OF 32

EXHIBIT C

SESC LEGEND

- SILT FENCE
- TEMPORARY CONSTRUCTION ENTRANCE
- RIP RAP
- EROSION CONTROL BLANKET
- SEDIMENT LOG
- INLET PROTECTION FILTER BASKET
- CONCRETE WASHOUT
- PROPOSED MAJOR CONTOUR
- PROPOSED MINOR CONTOUR
- EXISTING MAJOR CONTOUR
- EXISTING MINOR CONTOUR

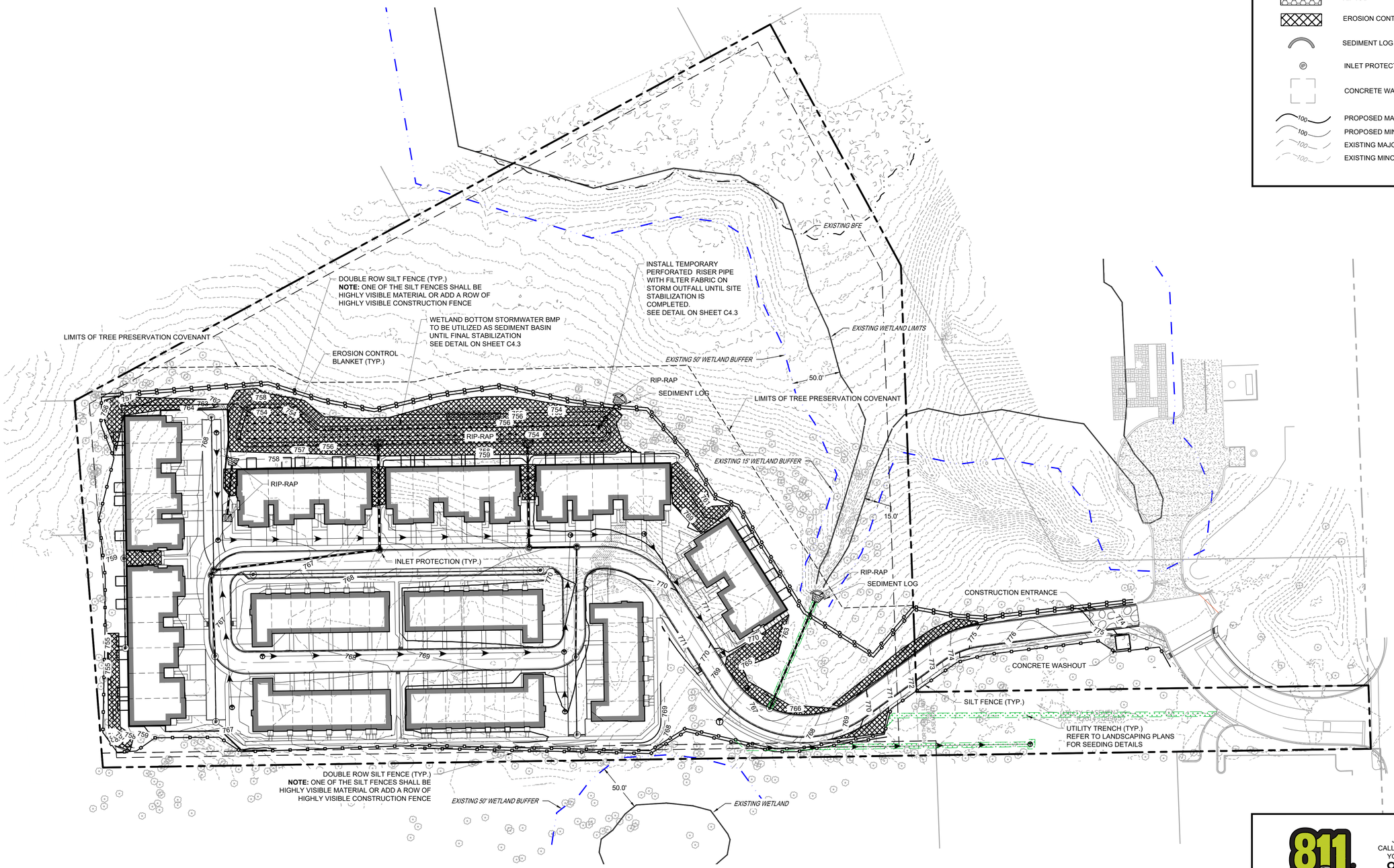

2200 CABOT DRIVE
SUITE 325
LISLE, IL 60532
P: 630.598.0007
WWW.CAGECIVIL.COM

CAGE CIVIL ENGINEERING

FREDERICK W. THIETE
062-055840
LICENSED PROFESSIONAL ENGINEER OF ILLINOIS
EXP. 11/30/2025

REVISIONS

3 06/25/2025 CITY RESUBMITTAL
2 05/23/2025 CITY RESUBMITTAL

THIS DESIGN AND THESE DRAWINGS ARE THE PROPERTY OF CAGE ENGINEERING, INC. NO PART OF THIS WORK MAY BE REPRODUCED WITHOUT PRIOR WRITTEN PERMISSION FROM CAGE ENGINEERING, INC.

M/I HOMES OF CHICAGO, LLC

NORTHWOODS OF NAPERVILLE

1151 WARRENVILLE ROAD
NAPERVILLE, IL 60563

JULIE CALL BEFORE YOU DIG 811

0 50' 100'
1" = 50' (HORIZONTAL)

PROJ NO. 240255
ENG : DJB
DATE : 07/07/2025

SHEET TITLE
SOIL EROSION CONTROL PLAN

SHEET NUMBER
C4.0
11 OF 32

EXHIBIT C

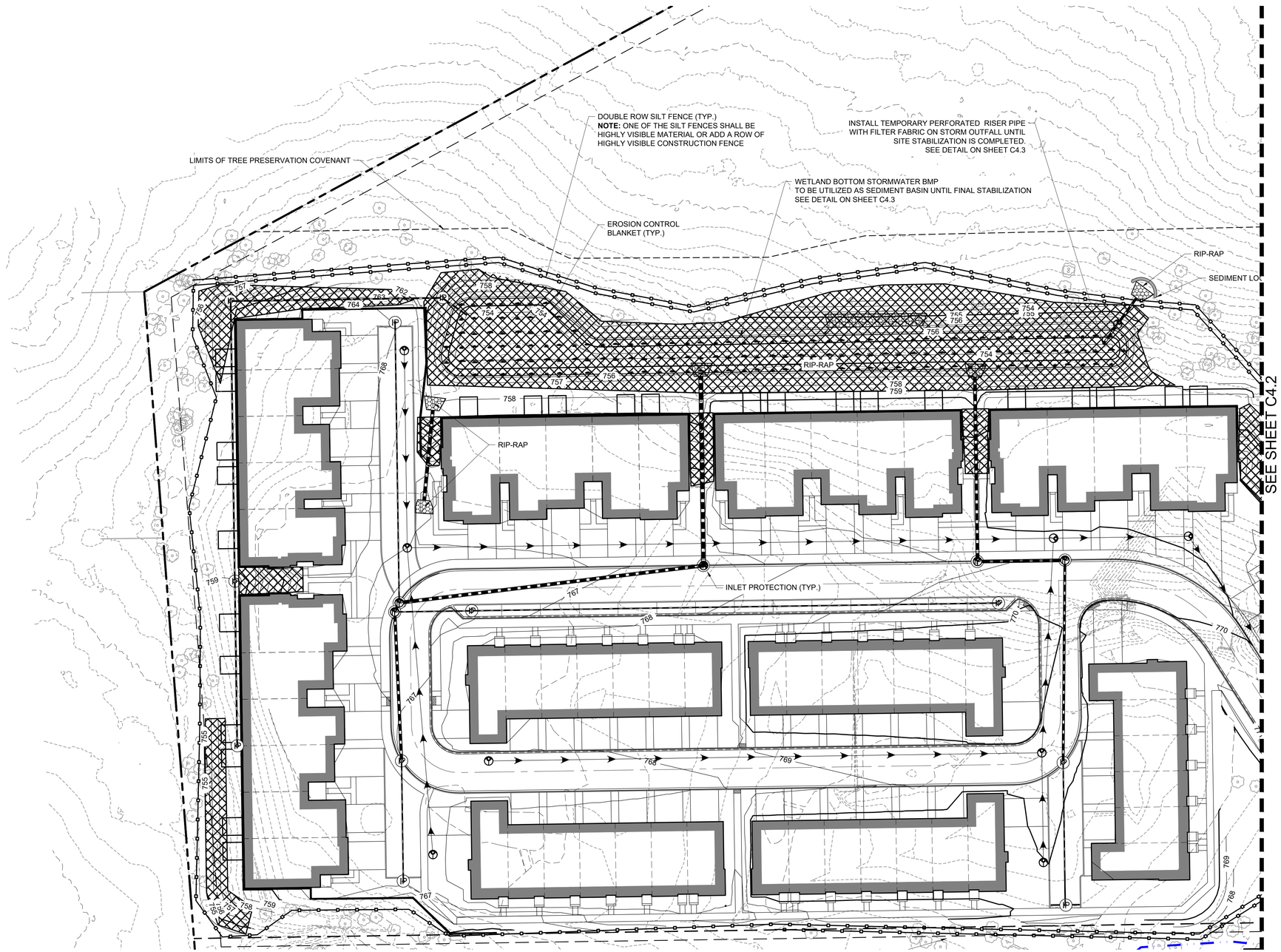

SESC LEGEND

- SILT FENCE
- TEMPORARY CONSTRUCTION ENTRANCE
- RIP RAP
- EROSION CONTROL BLANKET
- SEDIMENT LOG
- INLET PROTECTION FILTER BASKET
- CONCRETE WASHOUT
- PROPOSED MAJOR CONTOUR
- PROPOSED MINOR CONTOUR
- EXISTING MAJOR CONTOUR
- EXISTING MINOR CONTOUR

2200 CABOT DRIVE
SUITE 325
LISLE, IL 60532
P: 630.598.0007
WWW.CAGECIVIL.COM

CAGE CIVIL ENGINEERING

FREDERICK W. THIETE
062-055840
LICENSED PROFESSIONAL ENGINEER OF ILLINOIS
EXP. 11/30/2025

REVISIONS

1 06/25/2025 CITY RESUBMITTAL
1 05/23/2025 CITY RESUBMITTAL

THIS DESIGN AND THESE DRAWINGS ARE THE PROPERTY OF CAGE ENGINEERING, INC. NO PART OF THIS WORK MAY BE REPRODUCED WITHOUT PRIOR WRITTEN PERMISSION FROM CAGE ENGINEERING, INC.

M/I HOMES OF CHICAGO, LLC

NORTHWOODS OF NAPERVILLE

1151 WARRENVILLE ROAD
NAPERVILLE, IL 60563

JULIE
CALL BEFORE
YOU DIG
811

0 30.0001 60.0003
30.0001' (HORIZONTAL)

PROJ NO.: 240255
ENG.: DJB
DATE: 07/07/2025

SHEET TITLE

DETAILED SOIL EROSION CONTROL PLAN

SHEET NUMBER

C4.1

--- OF 32

EXHIBIT C

SESC LEGEND

- SILT FENCE
- TEMPORARY CONSTRUCTION ENTRANCE
- RIP RAP
- EROSION CONTROL BLANKET
- SEDIMENT LOG
- INLET PROTECTION FILTER BASKET
- CONCRETE WASHOUT
- PROPOSED MAJOR CONTOUR
- PROPOSED MINOR CONTOUR
- EXISTING MAJOR CONTOUR
- EXISTING MINOR CONTOUR

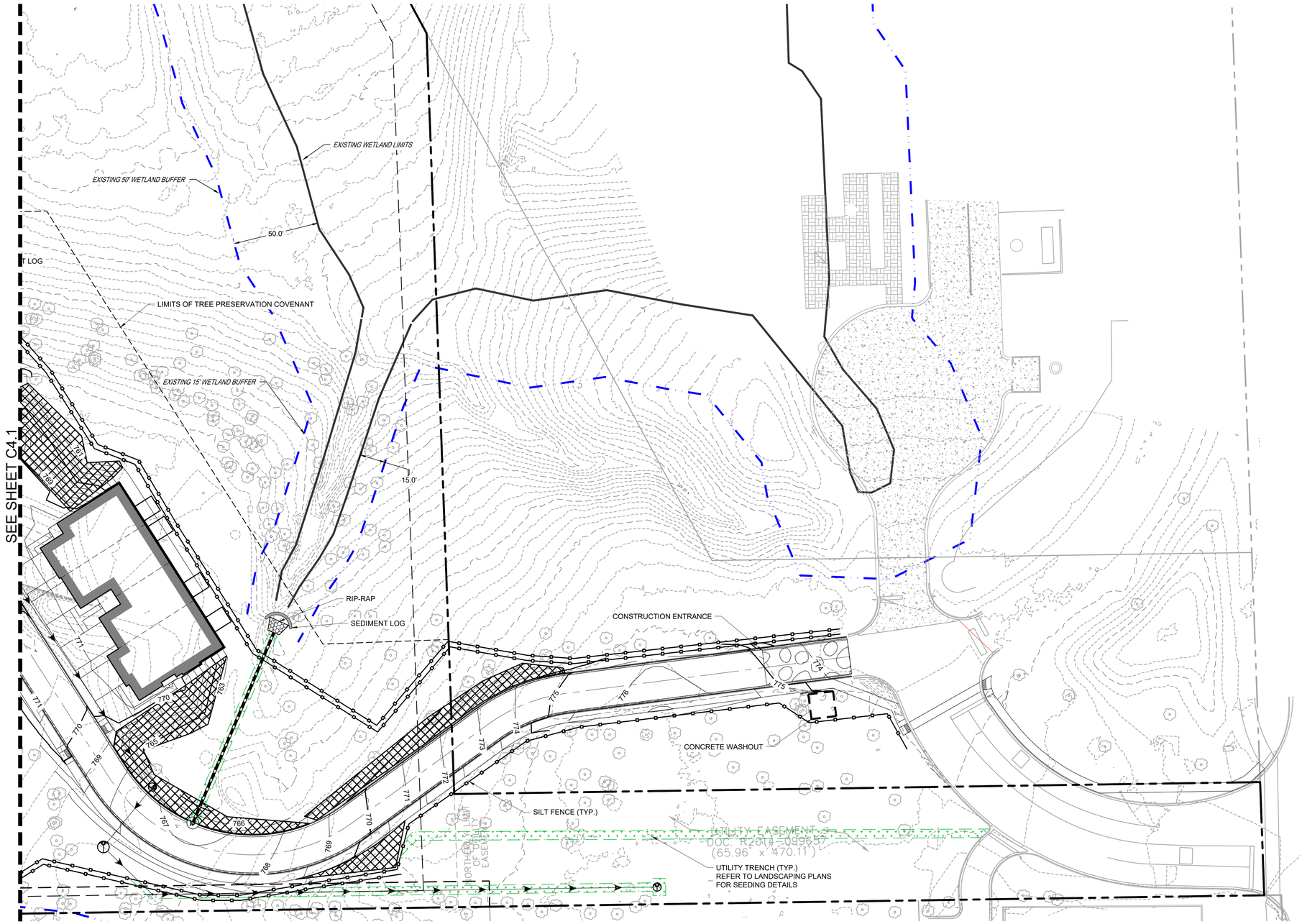

JULIE
CALL BEFORE
YOU DIG
811

0 30' 60'
1" = 30' (HORIZONTAL)

2200 CABOT DRIVE
SUITE 325
LISLE, IL 60532
P: 630.590.0007
WWW.CAGECIVIL.COM

CAGE CIVIL ENGINEERING

FREDERICK W. THAETE
062-055840
LICENSED PROFESSIONAL ENGINEER OF ILLINOIS
EXP. 11/30/2025

REVISIONS

1 06/25/2025 CITY RESUBMITTAL
1 05/23/2025 CITY RESUBMITTAL

THE DESIGN AND THESE DRAWINGS ARE THE PROPERTY OF CAGE ENGINEERING, INC. AND MAY NOT BE "REORGANIZED" BE REPRODUCED WITHOUT PRIOR WRITTEN PERMISSION FROM CAGE ENGINEERING, INC.

M/I HOMES OF CHICAGO, LLC

NORTHWOODS OF NAPERVILLE

1151 WARRENVILLE ROAD
NAPERVILLE, IL 60563

PROJ NO: 240255
ENG : DJB
DATE : 07/07/2025

SHEET TITLE

DETAILED SOIL EROSION CONTROL PLAN

SHEET NUMBER

C4.2

---- OF 32

EXHIBIT C

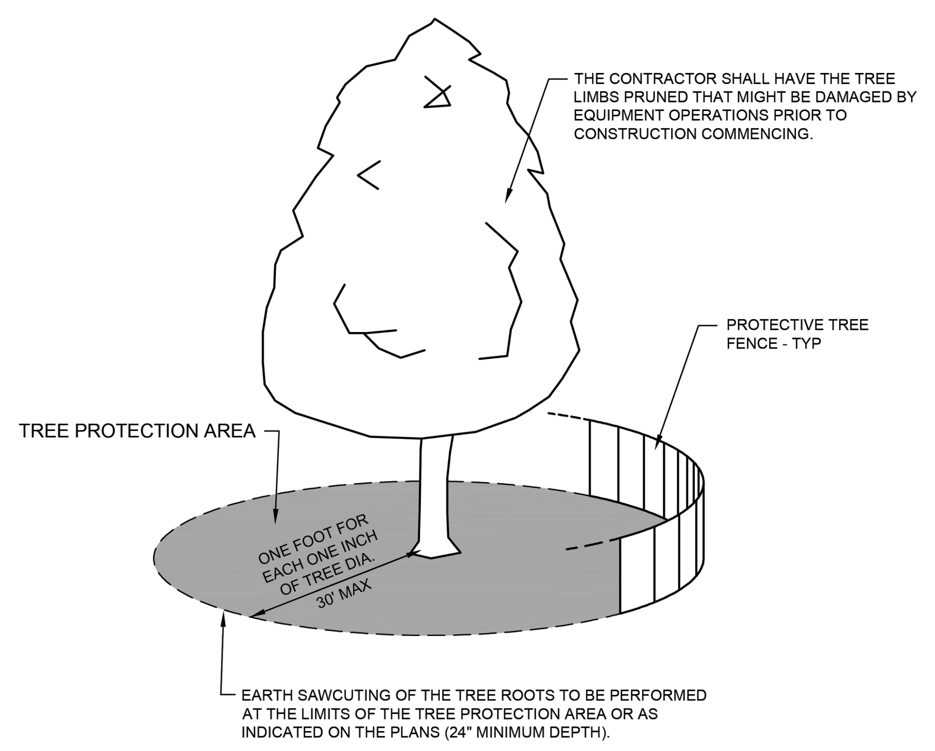

NOTES:

1. A TREE PROTECTION AREA SHALL BE ESTABLISHED AROUND A TREE A DISTANCE OF ONE FOOT FOR EACH ONE INCH OF TREE DIAMETER, UP TO A MAXIMUM OF 30 FEET.
2. PROTECTIVE TREE FENCE SHALL BE INSTALLED AT THE LIMITS OF THE TREE PROTECTION AREA. THE FENCE SHALL BE HIGH ENOUGH SO AS TO BE VISIBLE TO ALL CONSTRUCTION PERSONNEL.
3. GRADE CHANGES, UTILITY TRENCHES, STORAGE OF CONSTRUCTION MATERIAL, DUMPING OF WASTE, OR OPERATION OR STORAGE OF ANY EQUIPMENT SHALL NOT BE ALLOWED WITHIN THE TREE PROTECTION AREA.
4. AUGURING IS REQUIRED IF A UTILITY MUST BE INSTALLED WITHIN THE TREE PROTECTION AREA. AUGURED UTILITIES MUST BE A MINIMUM OF 24 INCHES BELOW GRADE.
5. ALL TREES TO BE SAVED WHICH HAVE BEEN SUBJECTED TO CONSTRUCTION ACTIVITY WITHIN THE TREE PROTECTION AREA SHOULD BE SELECTIVELY THINNED 10% BY AN ARBORIST SKILLED AT THE SELECTIVE THINNING PROCEDURE. NONE OF THE TREES SHALL BE TOPPED, HEADED BACK, SKINNED (REMOVAL OF THE INTERIOR BRANCHES), OR CLIMBED WITH SPIKES. ALL DEAD WOOD SHOULD BE REMOVED TO AVOID HAZARD.
6. IT IS RECOMMENDED THAT FOLLOWING CONSTRUCTION, TREES BE MAINTAINED IN THEIR NATIVE CONDITION. NO LAWN SHOULD BE PLACED AROUND THE TREES. IT IS RECOMMENDED THAT THE AREA BE MULCHED WITH 2 INCHES OF DECOMPOSED LEAVES AND 2 INCHES OF WOOD CHIPS OR BARK.

City of Naperville STANDARD DETAIL	TREE PROTECTION	LANDSCAPE 10 790.10
	REVISED: 08/01/2018 SHEET 1 OF 1	

TREE PROTECTION DETAIL
Scale: NOT TO SCALE

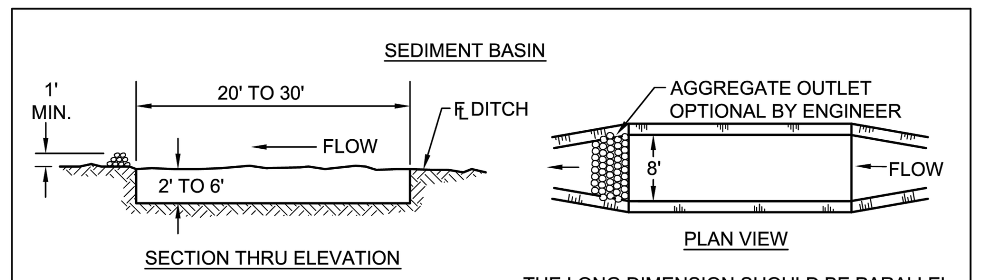

THE PERFORMANCE OF THE BASIN WILL IMPROVE IF PUT INTO A SERIES.

THE LONG DIMENSION SHOULD BE PARALLEL WITH THE DIRECTION OF THE FLOW. ACCUMULATED SILT SHALL BE REMOVED ANYTIME THE BASINS BECOME 75% FILLED.

TEMPORARY DITCHES FOR CUT AND FILL SECTIONS

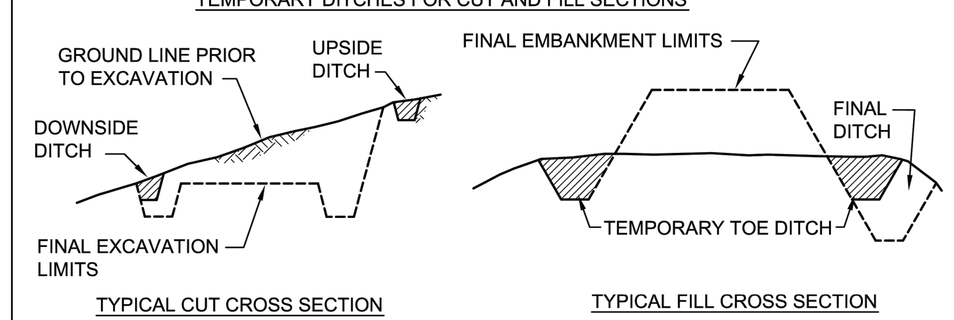

TEMPORARY DITCHES OR THE FINAL DITCH GRADES INCLUDED IN THE PLANS SHALL BE EXCAVATED AT THE EARLIEST OPPORTUNITY DURING CONSTRUCTION IN ORDER TO CONTROL RUNOFF FROM THE EMBANKMENT OR CUT SECTION PER ARTICLE 202.05 OF THE STANDARD SPECIFICATIONS FOR ROAD AND BRIDGE CONSTRUCTION. SOME MEANS OF TRAPPING SILTATION SHOULD BE PROVIDED AT THE OUTFLOW OF THESE DITCH SYSTEMS.

NOTES:

1. ACTUAL CONFIGURATION AND LOCATION OF TEMPORARY EROSION CONTROL SYSTEMS SHALL BE SHOWN ON THE PLANS OR AS DIRECTED BY THE ENGINEER.
2. DITCH CHECKS AND SEDIMENT BASINS SHOULD BE CONSTRUCTED AT APPROPRIATE INTERVALS ALONG THE WATERWAY TO BE EFFECTIVE.
3. THE TEMPORARY EROSION CONTROL SYSTEMS INSTALLED BY THE CONTRACTOR SHALL BE PROPERLY MAINTAINED AS DIRECTED BY THE ENGINEER TO CONTROL SILTATION AT ALL TIMES DURING THE LIFE OF THE CONTRACT.

City of Naperville STANDARD DETAIL	TEMPORARY EROSION CONTROL - SEDIMENT BASIN & TEMPORARY DITCHES	LANDSCAPE 2 790.02
	REVISED: 01/01/2013 SHEET 1 OF 1	

TEMPORARY DITCH DETAIL
Scale: NOT TO SCALE

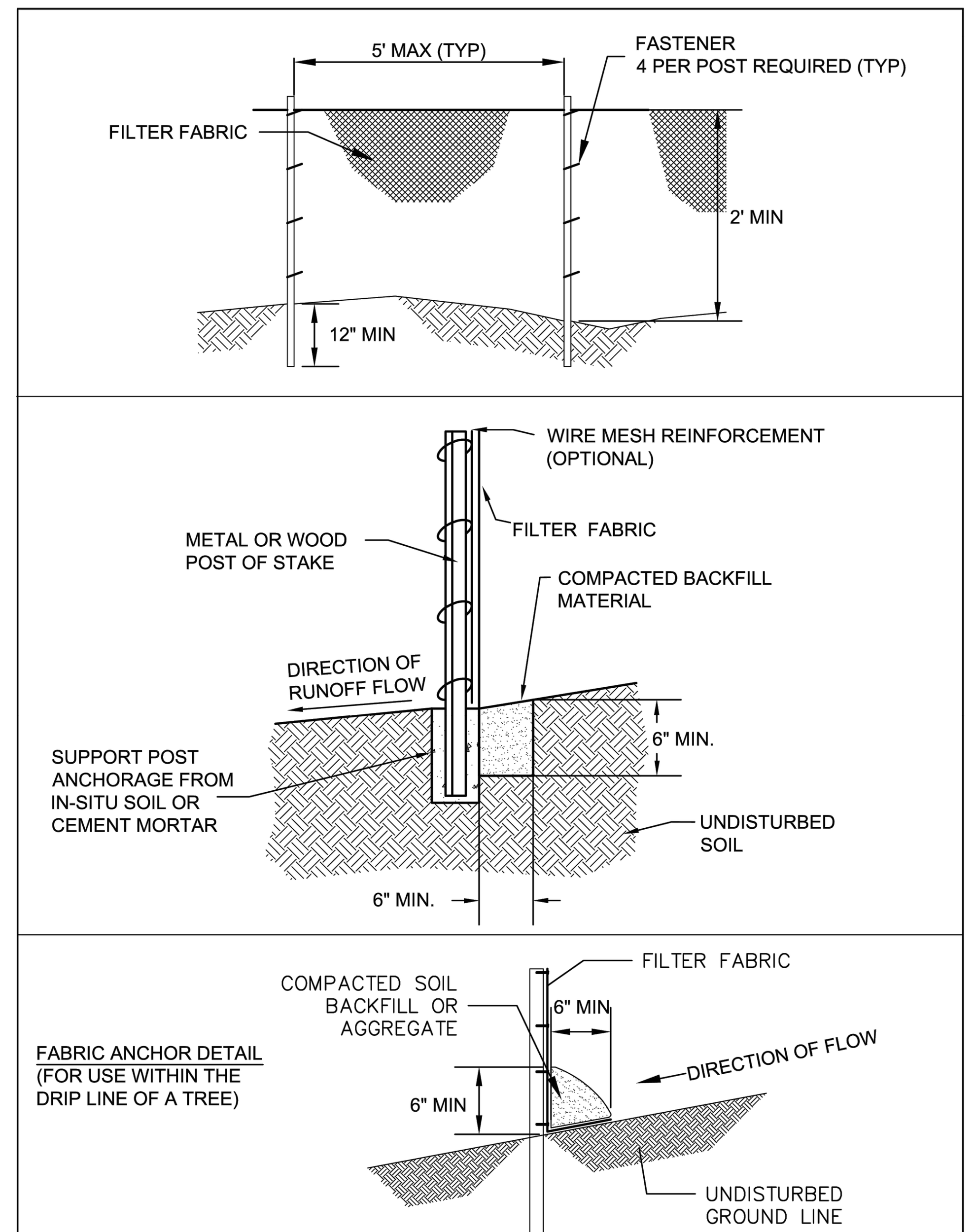

City of Naperville STANDARD DETAIL	TEMPORARY EROSION CONTROL MEASURE - SILT FENCE	LANDSCAPE 3 790.03
	REVISED: 01/01/2013 SHEET 1 OF 2	

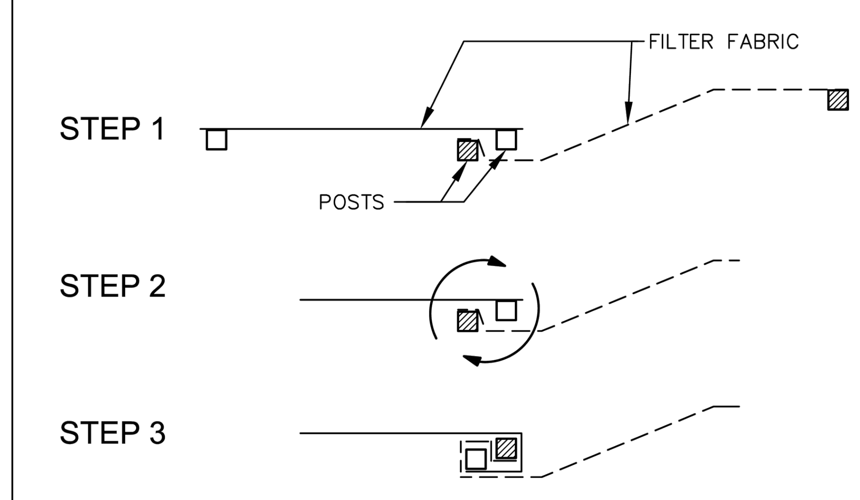

STEPS FOR THE ATTACHMENT OF TWO SILT FENCES:
1. PLACE THE END POST OF THE SECOND FENCE INSIDE THE END POST OF THE FIRST FENCE.
2. ROTATE BOTH POSTS AT LEAST 180 DEGREESIN A CLOCKWISE DIRECTION TO CREATE A TIGHT SEAL WITH THE FABRIC MATERIAL.
3. DRIVE BOTH POSTS A MINIMUM OF 18 INCHES INTO THE GROUND AND BURY THE FLAP.

NOTES:
1. TEMPORARY SILT FENCE SHALL BE INSTALLED PRIOR TO ANY GRADING WORK IN THE AREA TO BE PROTECTED. THEY SHALL BE MAINTAINED THROUGHOUT THE CONSTRUCTION PERIOD AND REMOVED IN CONJUNCTION WITH THE FINAL GRADING AND SITE STABILIZATION.
2. FILTER FABRIC SHALL MEET THE REQUIREMENTS OF MATERIAL SPECIFICATION 592 GEOTEXTILE TABLE 1 OR 2, CLASS I WITH EQUIVALENT OPENING SIZE OF AT LEAST 30 FOR NON-WOVEN OR 50 FOR WOVEN.
3. FENCE POSTS SHALL BE EITHER STANDARD STEEL POST OR WOOD POST WITH A MINIMUM CROSS-SECTIONAL AREA OF 3.0 SQ. IN.
4. DEPENDING UPON THE CONFIGURATION, ATTACH FABRIC AND WIRE MESH WITH HOG RINGS, STEEL POST WITH TIE WIRES, WOOD POST WITH NAILS.

City of Naperville STANDARD DETAIL	TEMPORARY EROSION CONTROL MEASURE - SILT FENCE	LANDSCAPE 3 790.03
	REVISED: 01/01/2013 SHEET 2 OF 2	

SILT FENCE DETAIL
Scale: NOT TO SCALE

CONSTRUCTION ROAD STABILIZATION

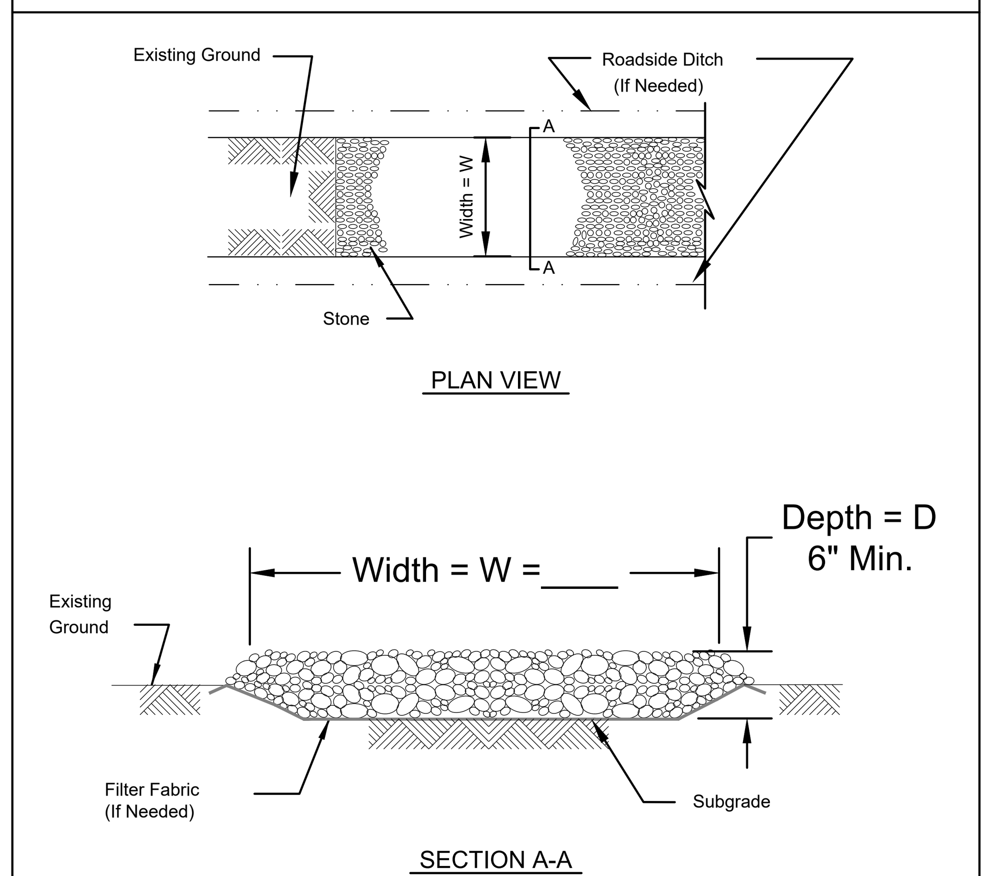

NOTES:
1. Filter fabric shall meet the requirements of material specification 592 GEOTEXTILE, Table 1 or 2, Class I, II or IV and shall be placed over the cleared area prior to the placing of rock.
2. Stone shall meet one of the following IDOT coarse aggregate gradations, CA-1, CA-2, CA-3, or CA-4 and be placed according to construction specification 25 ROCKFILL using placement Method 1 and Class III compaction.
3. See plans for construction road location, D and W dimensions.
4. Minimum width is 14 feet for one-way traffic and 20 feet for two-way traffic. Two-way traffic widths shall be increased a minimum of 4 feet for trailer traffic. Depending on the type of vehicle or equipment, speed, loads, climatic and other conditions under which vehicles and equipment operate an increase in the minimum widths may be required.
5. Roadway shall follow the contour of the natural terrain to the extent possible.

REFERENCE	NRCS Natural Resources Conservation Service	STANDARD DWG. NO. IL-506
Project ____ Designed ____ Date ____ Checked ____ Date ____ Approved ____ Date ____		SHEET 1 OF 1 DATE 1-29-99

CONSTRUCTION ENTRANCE DETAIL
Scale: NOT TO SCALE

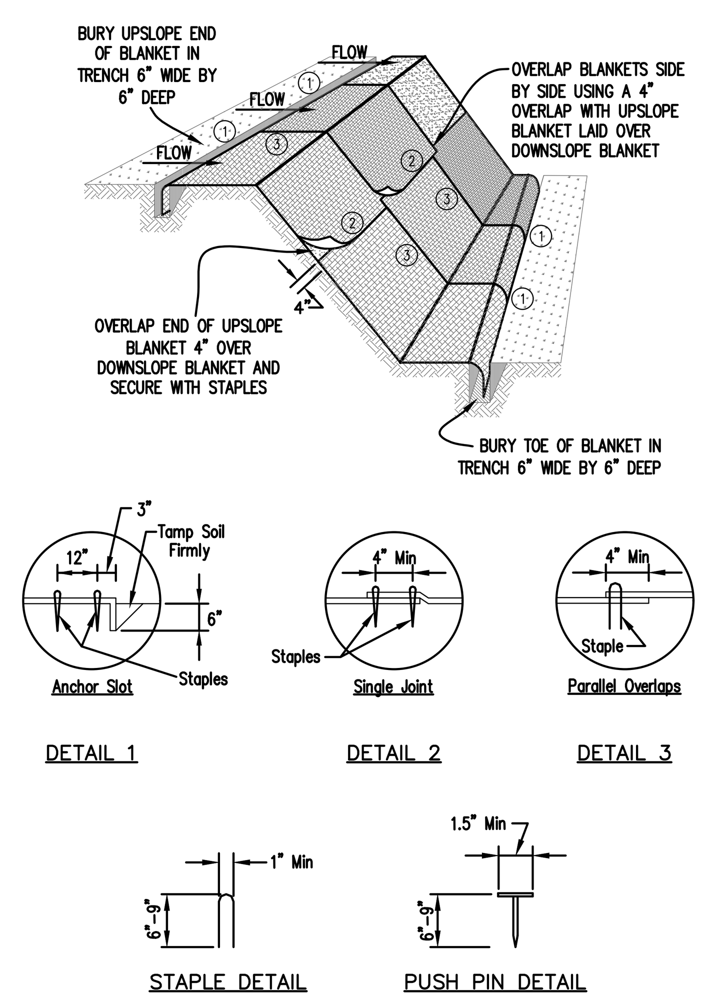

NOTES:

1. Staples shall be placed in a diamond pattern at 2 per s.y. for stiched blankets. Non-stiched shall use 4 staples per s.y. of material. This equates to 200 staples with stiched blanket and 400 stapels with non-stiched blanket per 100 s.y. of material.
2. Staple or push pin lengths shall be selected based on soil type and conditions. (minimum staple length is 6")
3. Erosion control material shall be placed in contact with the soil over a prepared seedbed.
4. All anchor slots shall be stapled at approximately 12" intervals.

EROSION CONTROL BLANKET INSTALLATION DETAILS

EROSION CONTROL BLANKET DETAIL
Scale: NOT TO SCALE

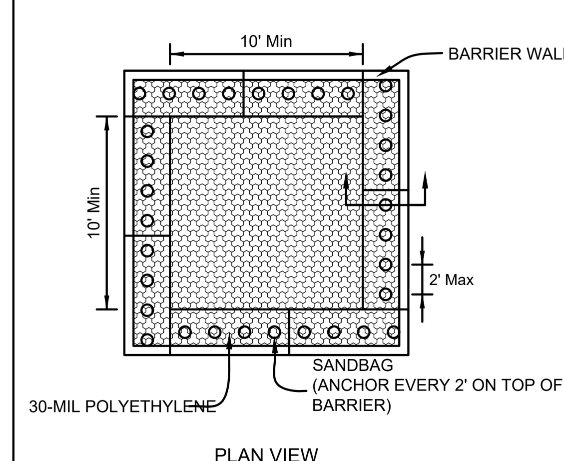

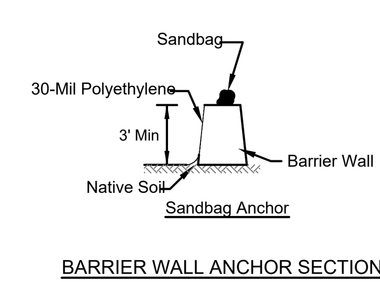

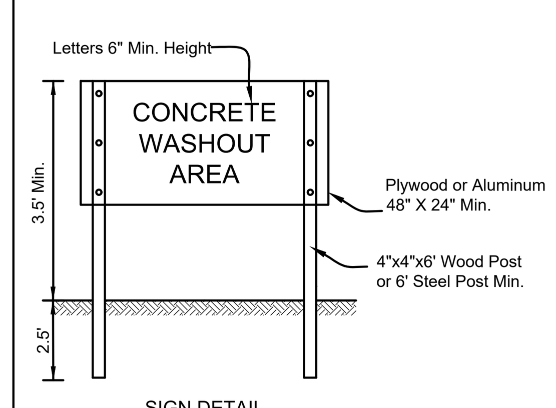

NOTES:

1. Maintaining temporary concrete washout facilities shall include removing and disposing of hardend concrete and/or slurry and returning the facilities to a functional condition.
2. Facility shall be cleaned or reconstructed in a new area once washout becomes two-thirds full.

TEMPORARY CONCRETE WASHOUT FACILITY - BARRIER WALL

CONCRETE WASHOUT DETAIL
Scale: NOT TO SCALE

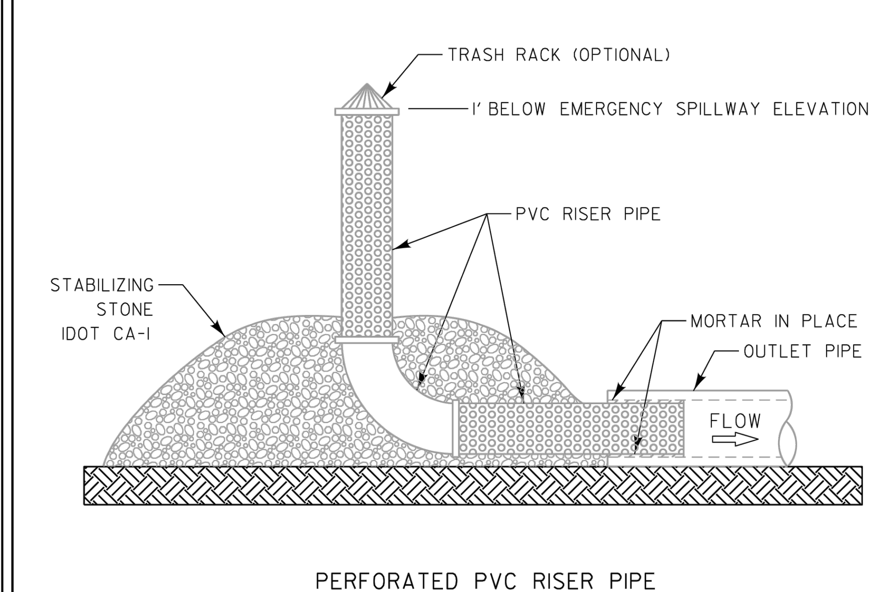

PERFORATED PVC RISER PIPE

DESIGN NOTES:

PVC RISER PIPE SHALL BE ONE SIZE SMALLER THAN OUTLET PIPE AND SHALL BE SECURELY FIXED TO THE INSIDE OF THE OUTLET PIPE WITH MORTAR.

PVC RISER SHALL HAVE 1" HOLES EVENLY SPACED AROUND THE CIRCUMFERENCE OF THE PIPE AS FOLLOWS:

PIPE DIA (IN)	NUMBER OF 1" HOLES PER LIN FT OF PIPE
5	25
6	30
8	40
10	50
12	60

PVC RISER PIPE SHALL BE LOOSELY DOUBLE OR TRIPLE WRAPPED WITH CHICKEN WIRE OR 1/4" HARDWARE CLOTH AROUND BOTH MEMBERS AND WRAPPED ON THE OUTSIDE WITH A WOVEN MONOFILAMENT GEOTEXTILE.

PLACE SUFFICIENT CA-1 STONE TO HOLD THE RISER PIPE IN PLACE.

IF TRASH RACK IS PROVIDED, IT SHALL BE SECURELY FASTENED TO THE INLET. TRASH GUARD MAY BE FABRICATED FROM METAL RODS (5/8" DIA MIN) OR GALVANIZED WELDED WIRE FABRIC (6 GAGE MIN). THE SPACING BETWEEN VERTICAL MEMBERS SHOULD BE 1 INCH.

PERFORATED RISER PIPE DETAIL
Scale: NOT TO SCALE

2200 CABOT DRIVE
SUITE 325
LISLE, IL 60532
P: 630.598.0007
WWW.CAGECIVIL.COM
CAGE CIVIL ENGINEERING

FREDERICK W. THAETE 062-055840 LICENSED PROFESSIONAL ENGINEER OF ILLINOIS
EXP. 11/30/2025

REVISIONS
2 06/25/2025 CITY RESUBMITTAL
1 05/23/2025 CITY RESUBMITTAL

THIS DESIGN AND THESE DRAWINGS ARE THE PROPERTY OF CAGE ENGINEERING INC. NO PART OF THIS WORK MAY BE REPRODUCED WITHOUT PRIOR WRITTEN PERMISSION FROM CAGE ENGINEERING INC.

M/I HOMES OF CHICAGO, LLC
NORTHWOODS OF NAPERVILLE
1151 WARRENVILLE ROAD
NAPERVILLE, IL 60563

PROJ NO: 240255
ENG: DJB
DATE: 07/07/2025

SHEET TITLE
SOIL EROSION CONTROL DETAILS

SHEET NUMBER
C4.3
12 OF 32

EXHIBIT C

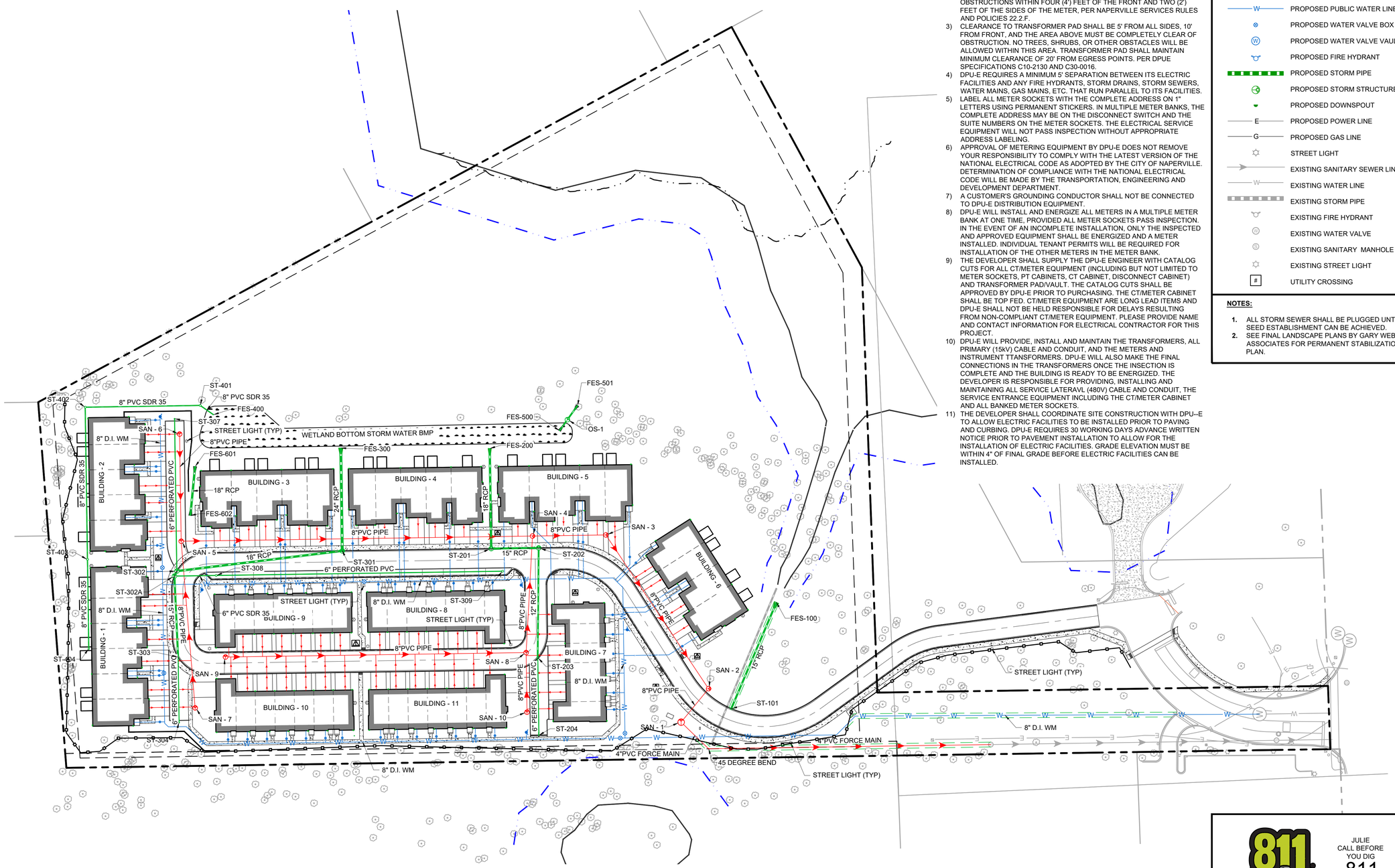

DEPARTMENT OF PUBLIC UTILITIES - ELECTRIC GENERAL NOTES

1) ELECTRIC FACILITIES SHALL BE INSTALLED PURSUANT TO SECTION 8-1C-3 OF THE CITY OF NAPERVILLE MUNICIPAL CODE, WHICH REQUIRES A CONSTRUCTION FEE PAYMENT FOR INSTALLATION OF ELECTRIC FACILITIES.
2) AT ALL TIMES, THE CUSTOMER SHALL BE SOLELY RESPONSIBLE FOR MAINTAINING A SUITABLE APPROACH TO THE METER LOCATION, WITH NO OBSTRUCTIONS WITHIN FOUR (4') FEET OF THE FRONT AND TWO (2') FEET OF THE SIDES OF THE METER, PER NAPERVILLE SERVICES RULES AND POLICIES 22.2.F.
3) CLEARANCE TO TRANSFORMER PAD SHALL BE 5' FROM ALL SIDES, 10' FROM FRONT, AND THE AREA ABOVE MUST BE COMPLETELY CLEAR OF OBSTRUCTION. NO TREES, SHRUBS, OR OTHER OBSTACLES WILL BE ALLOWED WITHIN THIS AREA. TRANSFORMER PAD SHALL MAINTAIN MINIMUM CLEARANCE OF 20' FROM EGRESS POINTS. PER DPUE SPECIFICATIONS C10-2130 AND C30-0016.
4) DPU-E REQUIRES A MINIMUM 5' SEPARATION BETWEEN ITS ELECTRIC FACILITIES AND ANY FIRE HYDRANTS, STORM DRAINS, STORM SEWERS, WATER MAINS, GAS MAINS, ETC. THAT RUN PARALLEL TO ITS FACILITIES.
5) LABEL ALL METER SOCKETS WITH THE COMPLETE ADDRESS ON 1" LETTERS USING PERMANENT STICKERS. IN MULTIPLE METER BANKS, THE COMPLETE ADDRESS MAY BE ON THE DISCONNECT SWITCH AND THE SUITE NUMBERS ON THE METER SOCKETS. THE ELECTRICAL SERVICE EQUIPMENT WILL NOT PASS INSPECTION WITHOUT APPROPRIATE ADDRESS LABELING.
6) APPROVAL OF METERING EQUIPMENT BY DPU-E DOES NOT REMOVE YOUR RESPONSIBILITY TO COMPLY WITH THE LATEST VERSION OF THE NATIONAL ELECTRICAL CODE AS ADOPTED BY THE CITY OF NAPERVILLE. DETERMINATION OF COMPLIANCE WITH THE NATIONAL ELECTRICAL CODE WILL BE MADE BY THE TRANSPORTATION, ENGINEERING AND DEVELOPMENT DEPARTMENT.
7) A CUSTOMER'S GROUNDING CONDUCTOR SHALL NOT BE CONNECTED TO DPU-E DISTRIBUTION EQUIPMENT.
8) DPU-E WILL INSTALL AND ENERGIZE ALL METERS IN A MULTIPLE METER BANK AT ONE TIME, PROVIDED ALL METER SOCKETS PASS INSPECTION. IN THE EVENT OF AN INCOMPLETE INSTALLATION, ONLY THE INSPECTED AND APPROVED EQUIPMENT SHALL BE ENERGIZED AND A METER INSTALLED. INDIVIDUAL TENANT PERMITS WILL BE REQUIRED FOR INSTALLATION OF THE OTHER METERS IN THE METER BANK.
9) THE DEVELOPER SHALL SUPPLY THE DPU-E ENGINEER WITH CATALOG CUTS FOR ALL CT/METER EQUIPMENT (INCLUDING BUT NOT LIMITED TO METER SOCKETS, PT CABINETS, CT CABINET, DISCONNECT CABINET) AND TRANSFORMER PAD/VAULT. THE CATALOG CUTS SHALL BE APPROVED BY DPU-E PRIOR TO PURCHASING. THE CT/METER CABINET SHALL BE TOP FED. CT/METER EQUIPMENT ARE LONG LEAD ITEMS AND DPU-E SHALL NOT BE HELD RESPONSIBLE FOR DELAYS RESULTING FROM NON-COMPLIANT CT/METER EQUIPMENT. PLEASE PROVIDE NAME AND CONTACT INFORMATION FOR ELECTRICAL CONTRACTOR FOR THIS PROJECT.
10) DPU-E WILL PROVIDE, INSTALL AND MAINTAIN THE TRANSFORMERS, ALL PRIMARY (15kV) CABLE AND CONDUIT, AND THE METERS AND INSTRUMENT TTANSFORMERS. DPU-E WILL ALSO MAKE THE FINAL CONNECTIONS IN THE TRANSFORMERS ONCE THE INSECTION IS COMPLETE AND THE BUILDING IS READY TO BE ENERGIZED. THE DEVELOPER IS RESPONSIBLE FOR PROVIDING, INSTALLING AND MAINTAINING ALL SERVICE LATERAVL (480V) CABLE AND CONDUIT, THE SERVICE ENTRANCE EQUIPMENT INCLUDING THE CT/METER CABINET AND ALL BANKED METER SOCKETS.
11) THE DEVELOPER SHALL COORDINATE SITE CONSTRUCTION WITH DPU--E TO ALLOW ELECTRIC FACILITIES TO BE INSTALLED PRIOR TO PAVING AND CURBING. DPU-E REQUIRES 30 WORKING DAYS ADVANCE WRITTEN NOTICE PRIOR TO PAVEMENT INSTALLATION TO ALLOW FOR THE INSTALLATION OF ELECTRIC FACILITIES. GRADE ELEVATION MUST BE WITHIN 4" OF FINAL GRADE BEFORE ELECTRIC FACILITIES CAN BE INSTALLED.

UTILITY LEGEND

- PROPOSED PRIVATE SANITARY SEWER
- PROPOSED SANITARY MANHOLE
- PROPOSED SANITARY CLEANOUT
- PROPOSED PUBLIC WATER LINE
- PROPOSED WATER VALVE BOX
- PROPOSED WATER VALVE VAULT
- PROPOSED FIRE HYDRANT
- PROPOSED STORM PIPE
- PROPOSED STORM STRUCTURE
- PROPOSED DOWNSPOUT
- PROPOSED POWER LINE
- PROPOSED GAS LINE
- STREET LIGHT
- EXISTING SANITARY SEWER LINE
- EXISTING WATER LINE
- EXISTING STORM PIPE
- EXISTING FIRE HYDRANT
- EXISTING WATER VALVE
- EXISTING SANITARY MANHOLE
- EXISTING STREET LIGHT
- UTILITY CROSSING

NOTES:

1. ALL STORM SEWER SHALL BE PLUGGED UNTIL SEED ESTABLISHMENT CAN BE ACHIEVED.
2. SEE FINAL LANDSCAPE PLANS BY GARY WEBBER & ASSOCIATES FOR PERMANENT STABILIZATION PLAN.

2200 CABOT DRIVE
SUITE 325
LISLE, IL 60532
P: 630.590.0007
WWW.CAGECIVIL.COM

CAGE CIVIL ENGINEERING

FREDERICK W. THIETE
062-055840
LICENSED PROFESSIONAL ENGINEER
EXP. 11/30/2025

REVISIONS

06/25/2025 CITY RESUBMITTAL
05/23/2025 CITY RESUBMITTAL

THIS DESIGN AND THESE DRAWINGS ARE THE PROPERTY OF CAGE ENGINEERING, INC. NO PART OF THIS WORK MAY BE REPRODUCED WITHOUT PRIOR WRITTEN PERMISSION FROM CAGE ENGINEERING, INC.

M/I HOMES OF CHICAGO, LLC

NORTHWOODS OF NAPERVILLE

1151 WARRENVILLE ROAD
NAPERVILLE, IL 60563

JULIE
CALL BEFORE
YOU DIG
811

0 50' 100'
1" = 50' (HORIZONTAL)

PROJ NO: 240255
ENG : DJB
DATE : 07/07/2025

SHEET TITLE
UTILITY PLAN

SHEET NUMBER
C5.0
13 OF 32

EXHIBIT C

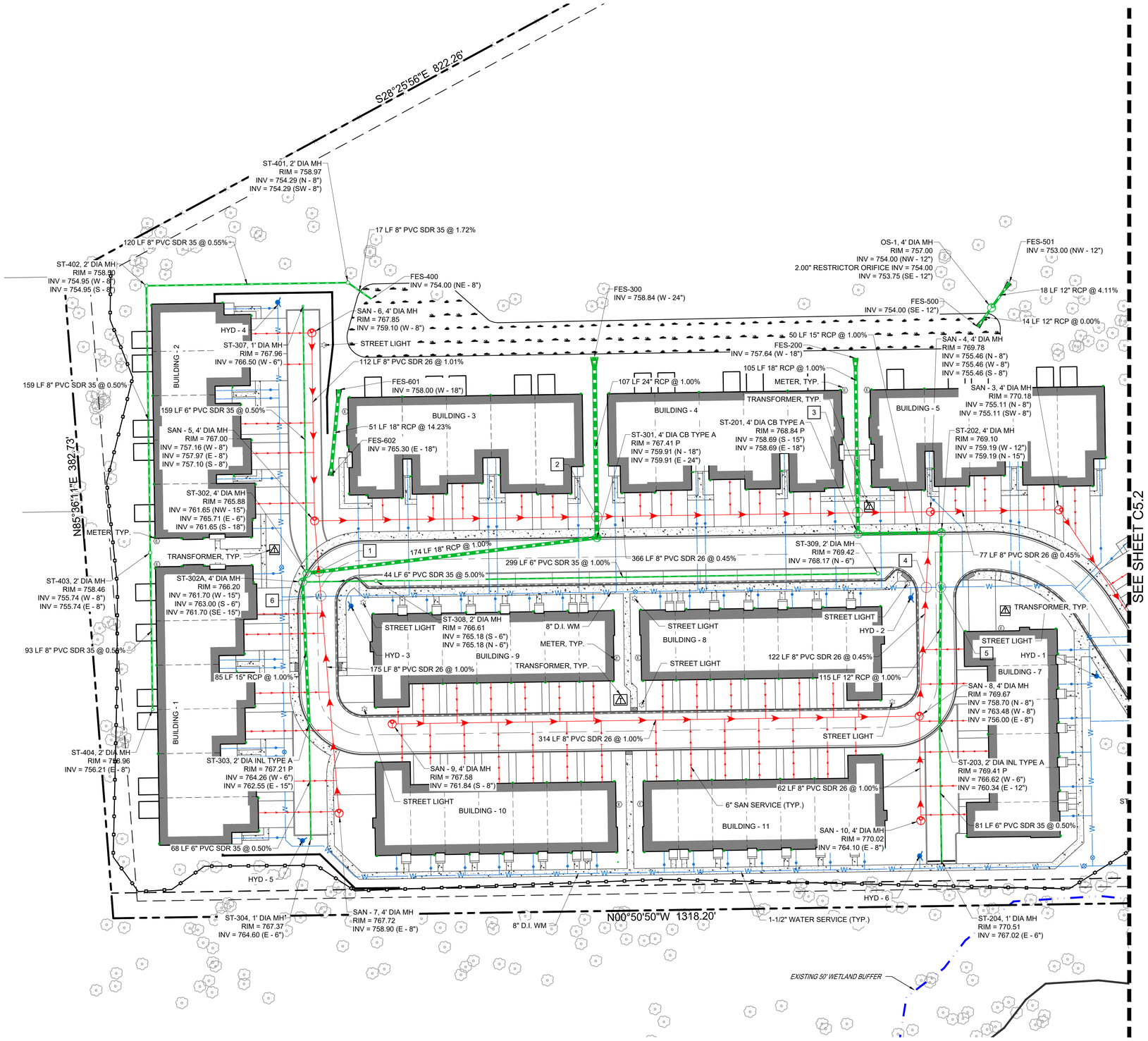

UTILITY LEGEND

- PROPOSED PRIVATE SANITARY SEWER
- PROPOSED SANITARY MANHOLE
- PROPOSED SANITARY CLEANOUT
- PROPOSED PUBLIC WATER LINE
- PROPOSED WATER VALVE BOX
- PROPOSED WATER VALVE VAULT
- PROPOSED FIRE HYDRANT
- PROPOSED STORM PIPE
- PROPOSED STORM STRUCTURE
- PROPOSED DOWNSPOUT
- PROPOSED POWER LINE
- PROPOSED GAS LINE
- STREET LIGHT
- EXISTING SANITARY SEWER LINE
- EXISTING WATER LINE
- EXISTING STORM PIPE
- EXISTING FIRE HYDRANT
- EXISTING WATER VALVE
- EXISTING SANITARY MANHOLE
- EXISTING STREET LIGHT
- UTILITY CROSSING

NOTES:

1. ALL STORM SEWER SHALL BE PLUGGED UNTIL SEED ESTABLISHMENT CAN BE ACHIEVED.
2. SEE FINAL LANDSCAPE PLANS BY GARY WEBBER & ASSOCIATES FOR PERMANENT STABILIZATION PLAN.

UTILITY CROSSINGS:

1. ST B/P = 761.3
   SAN T/P = 758.2
   ±3.1' CLEAR
   GROUND EL=766.2
2. ST B/P = 759.5
   SAN T/P = 757.1
   ±2.4' CLEAR
   GROUND EL=768.2
3. ST B/P = 758.4
   SAN T/P = 756.4
   ±2.0' CLEAR
   GROUND EL=769.4
4. WM B/P = 763.4
   SAN T/P = 756.8
   ±6.6' CLEAR
   GROUND EL=769.7
5. WM B/P = 763.4
   ST T/P = 760.7
   ±2.7' CLEAR
   GROUND EL=769.6
6. WM B/P = 760.20
   SAN T/P = 758.30
   ±1.9' CLEAR
   GROUND EL=766.3
7. FM B/P = 761.00
   WM T/P = 759.50
   ±1.5' CLEAR
   GROUND EL=765.9
8. EX ST B/P = 763.8
   WM T/P = 760.4
   ±3.4' CLEAR
   GROUND EL=765.9

JULIE
CALL BEFORE
YOU DIG
811

0 30' 60 '
1" = 30' (HORIZONTAL)

CAGE CIVIL ENGINEERING
2200 CABOT DRIVE
SUITE 325
LISLE, IL 60532
P: 630.590.0007
WWW.CAGECIVIL.COM

FREDERICK W. THIETE
062-055840
LICENSED PROFESSIONAL ENGINEER OF ILLINOIS
EXP. 11/30/2025

REVISIONS △

△ 06/25/2025 CITY RESUBMITTAL
△ 05/23/2025 CITY RESUBMITTAL

THIS DESIGN AND THESE DRAWINGS ARE THE PROPERTY OF CAGE ENGINEERING, INC. AND MAY NOT BE REUSED OR REPRODUCED WITHOUT PRIOR WRITTEN PERMISSION FROM CAGE ENGINEERING, INC.

M/I HOMES OF CHICAGO, LLC
NORTHWOODS OF NAPERVILLE
1151 WARRENVILLE ROAD
NAPERVILLE, IL 60563

PROJ NO: 240255
ENG : DJB
DATE : 07/07/2025

SHEET TITLE
DETAILED UTILITY PLAN

SHEET NUMBER
C5.1
14 OF 32

EXHIBIT C

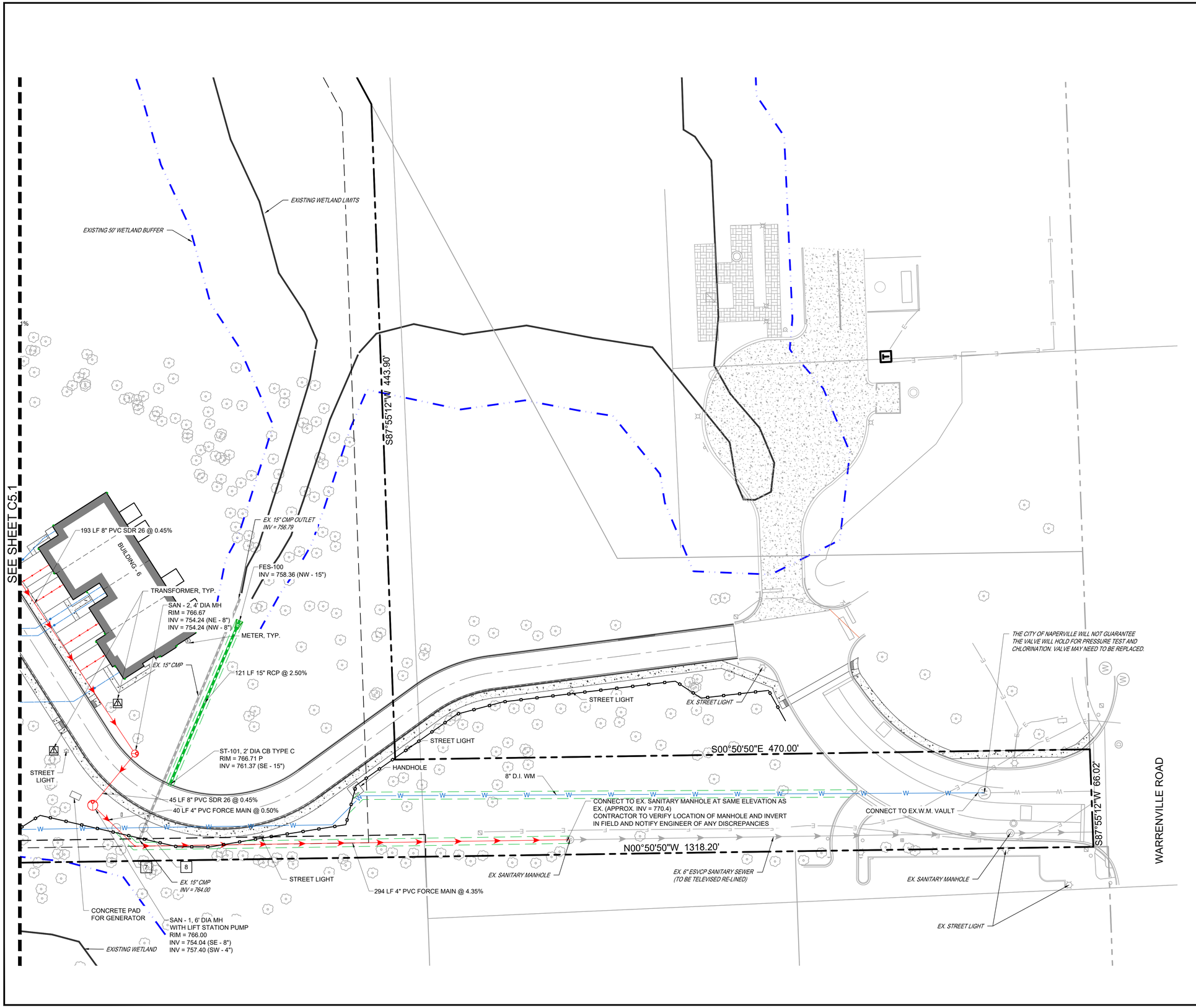

UTILITY LEGEND

- PROPOSED PRIVATE SANITARY SEWER
- PROPOSED SANITARY MANHOLE
- PROPOSED SANITARY CLEANOUT
- PROPOSED PUBLIC WATER LINE
- PROPOSED WATER VALVE BOX
- PROPOSED WATER VALVE VAULT
- PROPOSED FIRE HYDRANT
- PROPOSED STORM PIPE
- PROPOSED STORM STRUCTURE
- PROPOSED DOWNSPOUT
- PROPOSED POWER LINE
- PROPOSED GAS LINE
- STREET LIGHT
- EXISTING SANITARY SEWER LINE
- EXISTING WATER LINE
- EXISTING STORM PIPE
- EXISTING FIRE HYDRANT
- EXISTING WATER VALVE
- EXISTING SANITARY MANHOLE
- EXISTING STREET LIGHT
- UTILITY CROSSING

NOTES:

1. ALL STORM SEWER SHALL BE PLUGGED UNTIL SEED ESTABLISHMENT CAN BE ACHIEVED.
2. SEE FINAL LANDSCAPE PLANS BY GARY WEBBER & ASSOCIATES FOR PERMANENT STABILIZATION PLAN.

UTILITY CROSSINGS:

1. ST B/P = 761.3
   SAN T/P = 758.2
   ±3.1' CLEAR
   GROUND EL=766.2
2. ST B/P = 759.5
   SAN T/P = 757.1
   ±2.4' CLEAR
   GROUND EL=768.2
3. ST B/P = 758.4
   SAN T/P = 756.4
   ±2.0' CLEAR
   GROUND EL=769.4
4. WM B/P = 763.4
   SAN T/P = 756.8
   ±6.6' CLEAR
   GROUND EL=769.7
5. WM B/P = 763.4
   ST T/P = 760.7
   ±2.7' CLEAR
   GROUND EL=769.6
6. WM B/P = 760.20
   SAN T/P = 758.30
   ±1.9' CLEAR
   GROUND EL=766.3
7. FM B/P = 761.00
   WM T/P = 759.50
   ±1.5' CLEAR
   GROUND EL=765.9
8. EX ST B/P = 763.8
   WM T/P = 760.4
   ±3.4' CLEAR
   GROUND EL=765.9

JULIE
CALL BEFORE
YOU DIG
811

0 30' 60'
1" = 30' (HORIZONTAL)

CAGE CIVIL ENGINEERING
2200 CABOT DRIVE
SUITE 325
LISLE, IL 60532
P: 630.596.0007
WWW.CAGECIVIL.COM

FREDERICK W. THIETE
062-055840
LICENSED PROFESSIONAL ENGINEER OF ILLINOIS
EXP. 11/30/2025

REVISIONS
1 06/25/2025 CITY RESUBMITTAL
2 05/23/2025 CITY RESUBMITTAL

THIS DESIGN AND THESE DRAWINGS ARE THE PROPERTY OF CAGE ENGINEERING, INC. NO PART OF THIS WORK MAY BE REPRODUCED WITHOUT PRIOR WRITTEN PERMISSION FROM CAGE ENGINEERING, INC.

M/I HOMES OF CHICAGO, LLC
NORTHWOODS OF NAPERVILLE
1151 WARRENVILLE ROAD
NAPERVILLE, IL 60563

PROJ NO: 240255
ENG : DJB
DATE : 07/07/2025

SHEET TITLE
DETAILED UTILITY PLAN

SHEET NUMBER
C5.2
15 OF 32

EXHIBIT C

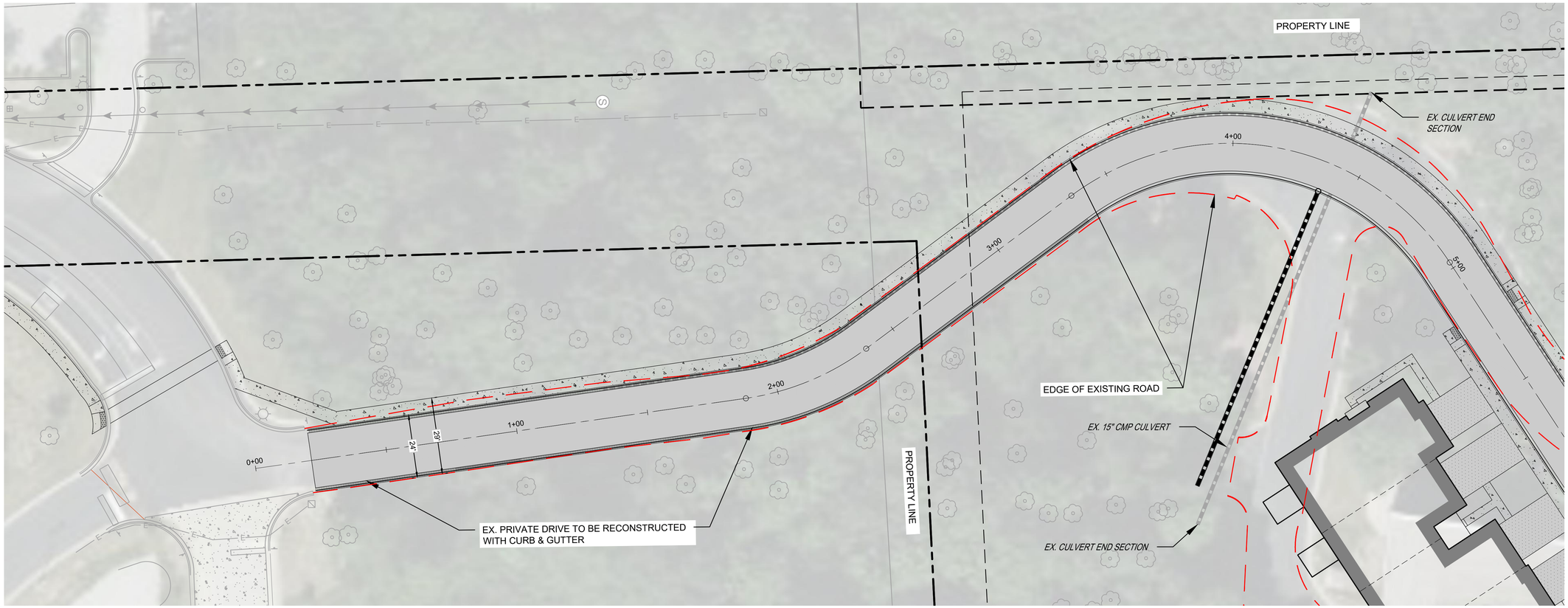

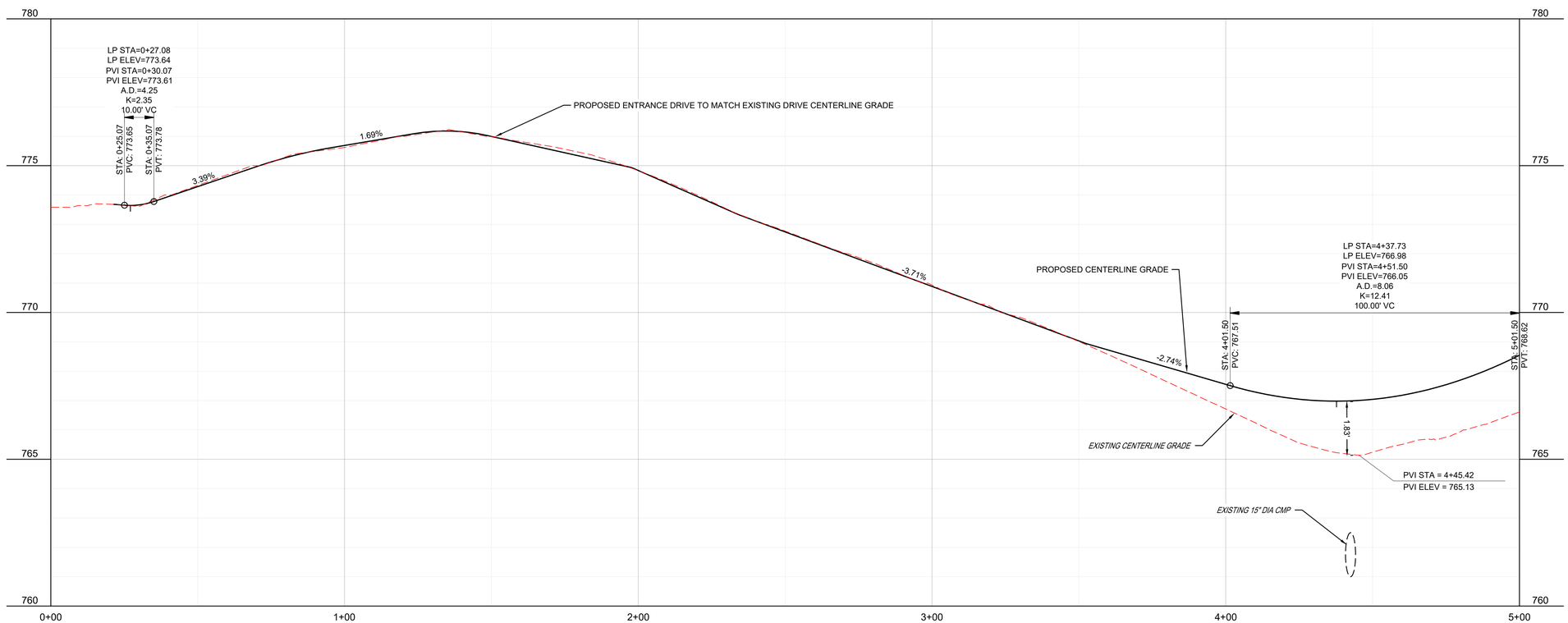

0 65.6168 131.2336
1 inch = 65.6168' (HORIZONTAL)

2200 CABOT DRIVE
SUITE 325
LISLE, IL 60532
P: 630.590.0007
WWW.CAGECIVIL.COM

CAGE CIVIL ENGINEERING

FREDERICK W. THAETE
062-055840
LICENSED PROFESSIONAL ENGINEER OF ILLINOIS
EXP. 11/30/2025

REVISIONS

2 06/25/2025 CITY RESUBMITTAL
1 05/23/2025 CITY RESUBMITTAL

THIS DESIGN AND THESE DRAWINGS ARE THE PROPERTY OF CAGE ENGINEERING, INC. NO PART OF THIS WORK MAY BE REPRODUCED WITHOUT PRIOR WRITTEN PERMISSION FROM CAGE ENGINEERING, INC.

M/I HOMES OF CHICAGO, LLC

NORTHWOODS OF NAPERVILLE

1151 WARRENVILLE ROAD
NAPERVILLE, IL 60563

PROJ NO. 240255
ENG : DJB
DATE : 07/07/2025

SHEET TITLE

ENTRANCE ROAD PLAN & PROFILE

SHEET NUMBER

C6.0

16 OF 32

EXHIBIT C

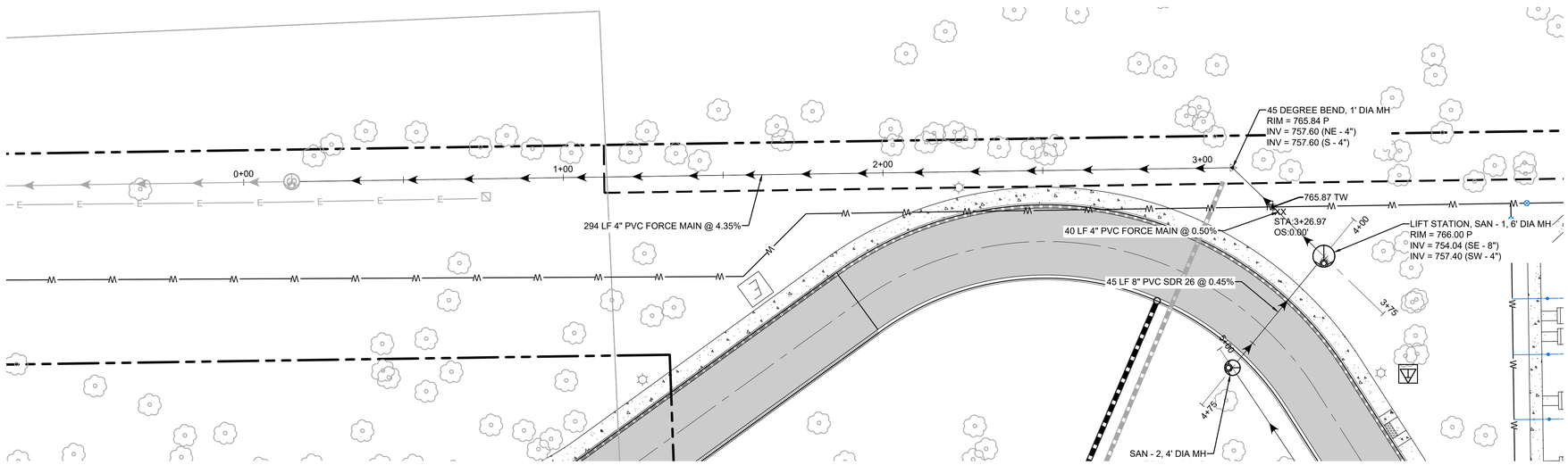

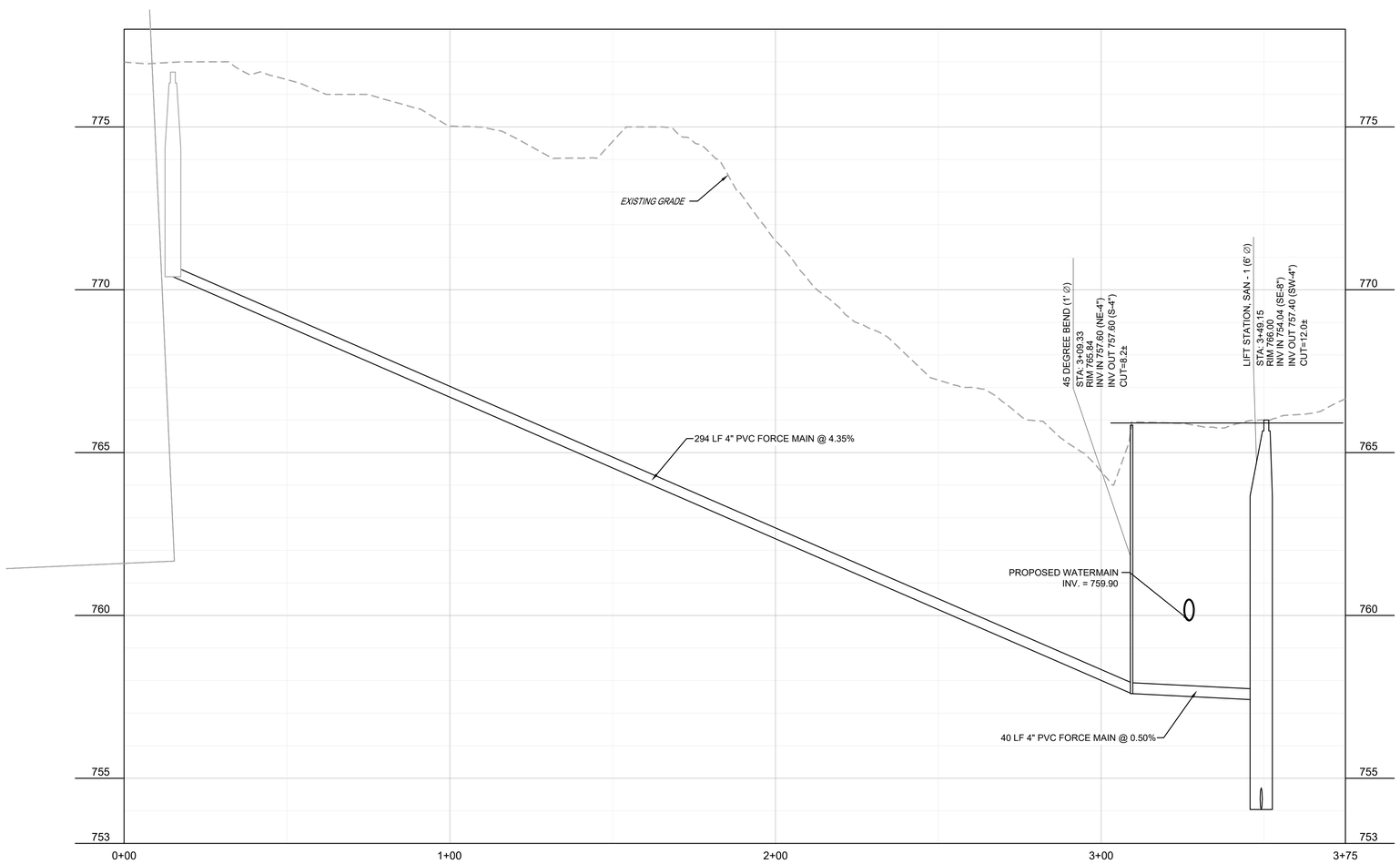

0 20' 40'
1" = 20' (HORIZONTAL)

2200 CABOT DRIVE
SUITE 325
LISLE, IL 60532
P: 630.396.0007
WWW.CAGECIVIL.COM

CAGE CIVIL ENGINEERING

FREDERICK W. THAETE
062-055840
LICENSED PROFESSIONAL ENGINEER OF ILLINOIS
EXP. 11/30/2025

REVISIONS △

△ 08/25/2025 CITY RESUBMITTAL
△ 05/23/2025 CITY RESUBMITTAL

THIS DESIGN AND THESE DRAWINGS ARE THE PROPERTY OF CAGE ENGINEERING, INC. NO PART OF THIS WORK MAY BE REPRODUCED WITHOUT PRIOR WRITTEN PERMISSION FROM CAGE ENGINEERING, INC.

M/I HOMES OF CHICAGO, LLC

NORTHWOODS OF NAPERVILLE

1151 WARRENVILLE ROAD
NAPERVILLE, IL 60563

PROJ NO.: 240255
ENG.: DJB
DATE.: 07/07/2025

SHEET TITLE

SANITARY PLAN & PROFILE

SHEET NUMBER

C7.0

EXHIBIT C

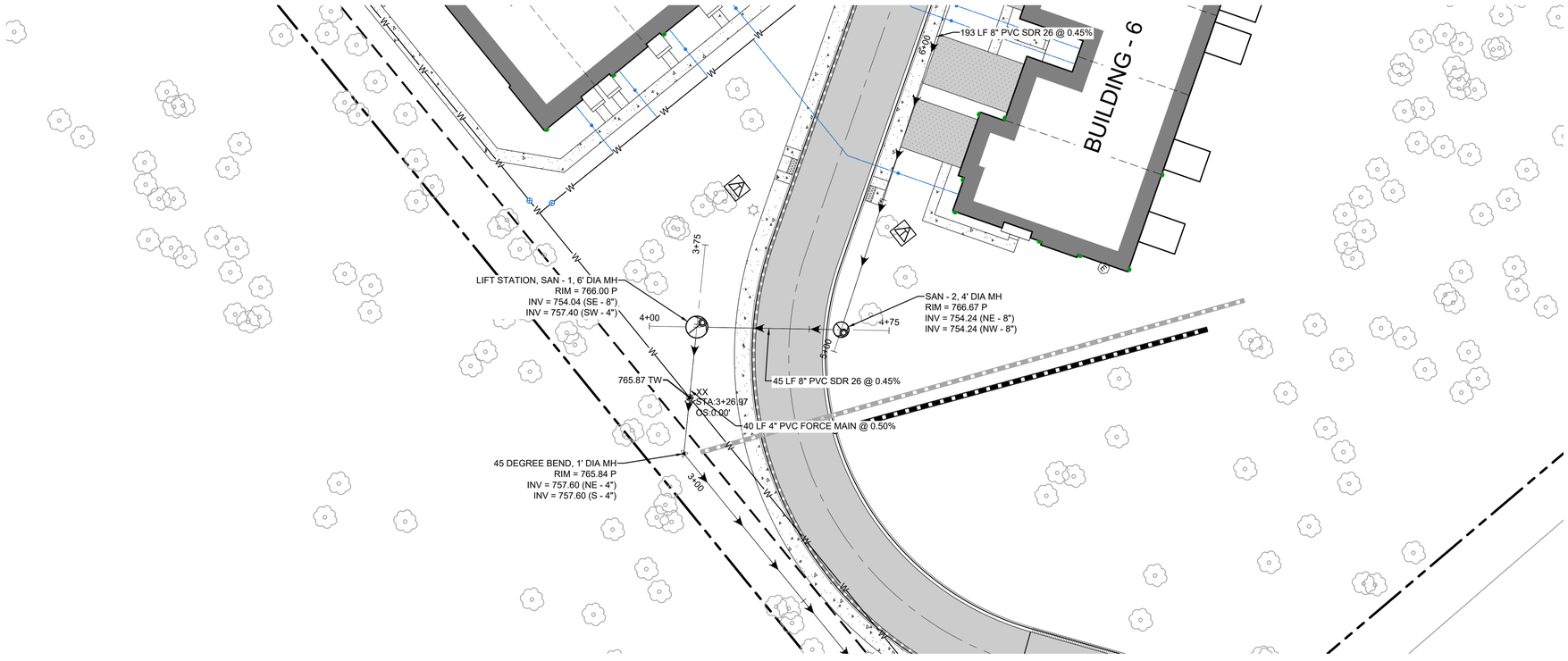

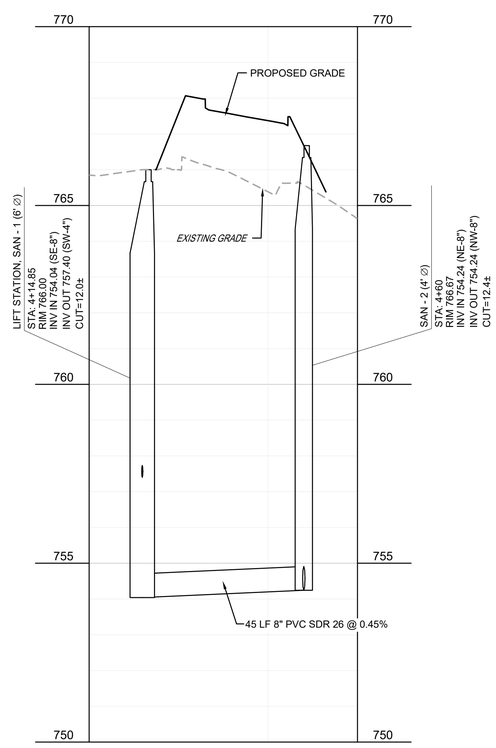

0 20' 40'
1" = 20' (HORIZONTAL)

2200 CABOT DRIVE
SUITE 325
LISLE, IL 60532
P: 630.396.0007
WWW.CAGECIVIL.COM

CAGE CIVIL ENGINEERING

FREDERICK W. THAETE
062-055840
LICENSED PROFESSIONAL ENGINEER
EXP. 11/30/2025

REVISIONS

1 08/25/2025
CITY RESUBMITTAL

2 05/23/2025
CITY RESUBMITTAL

THIS DESIGN AND THESE DRAWINGS ARE THE PROPERTY OF CAGE ENGINEERING, INC. NO PART OF THIS WORK MAY BE REPRODUCED WITHOUT PRIOR WRITTEN PERMISSION FROM CAGE ENGINEERING, INC.

M/I HOMES OF CHICAGO, LLC

NORTHWOODS OF NAPERVILLE

1151 WARRENVILLE ROAD
NAPERVILLE, IL 60563

PROJ NO.: 240255
ENG.: DJB
DATE.: 07/07/2025

SHEET TITLE

SANITARY PLAN & PROFILE

SHEET NUMBER

C7.1

18 OF 32

EXHIBIT C

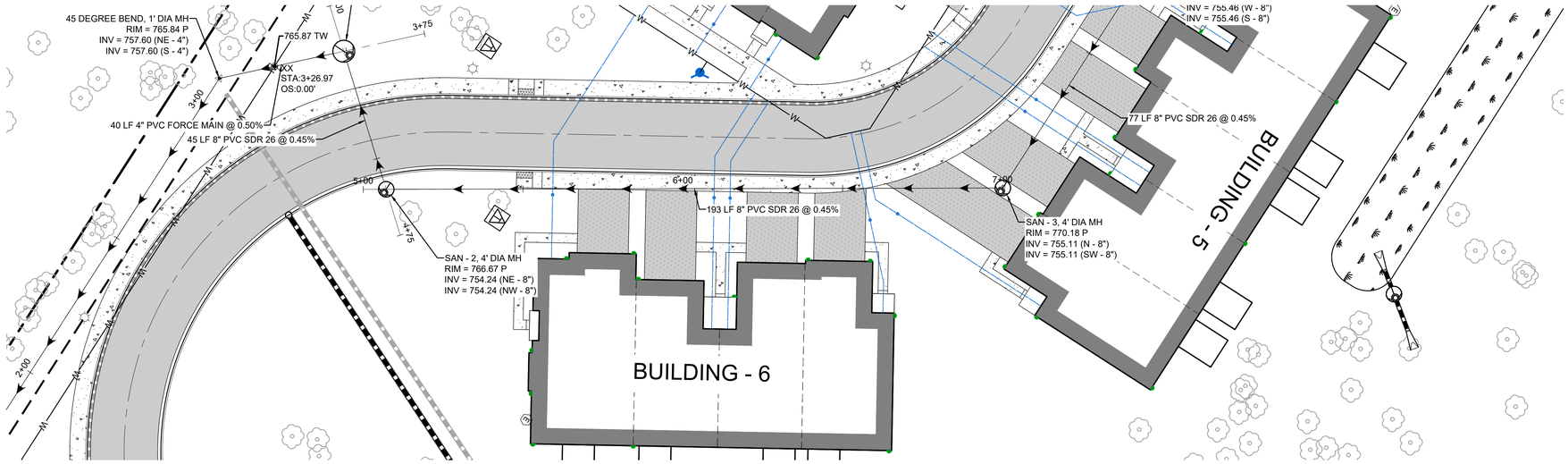

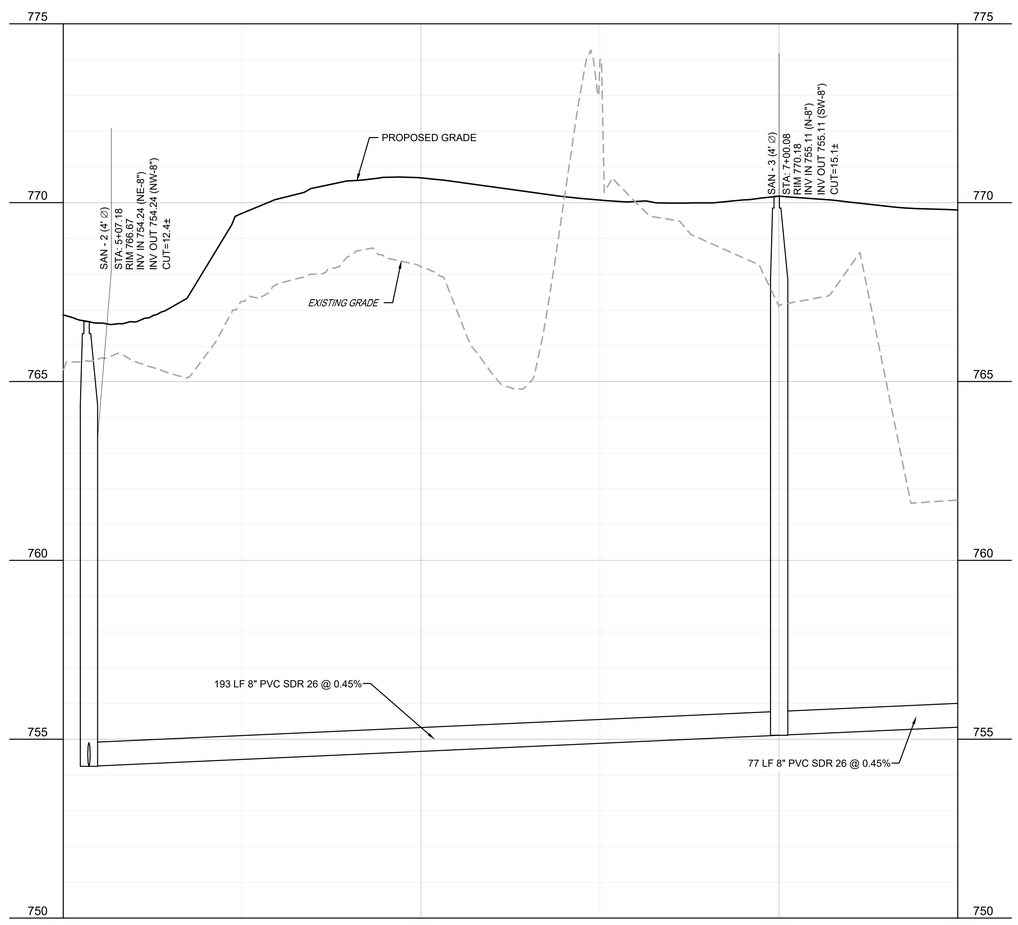

2200 CABOT DRIVE
SUITE 325
LISLE, IL 60532
P: 630.598.0007
WWW.CAGECIVIL.COM

CAGE
CIVIL ENGINEERING

FREDERICK W. THIETE
062-055840
LICENSED PROFESSIONAL ENGINEER OF ILLINOIS
EXP. 11/30/2025

REVISIONS

2 08/25/2025
CITY RESUBMITTAL
1 05/23/2025
CITY RESUBMITTAL

THIS DESIGN AND THESE DRAWINGS ARE THE PROPERTY OF CAGE ENGINEERING, INC. NO PART OF THIS WORK MAY BE REPRODUCED WITHOUT PRIOR WRITTEN PERMISSION FROM CAGE ENGINEERING, INC.

M/I HOMES OF CHICAGO, LLC

NORTHWOODS OF NAPERVILLE

1151 WARRENVILLE ROAD
NAPERVILLE, IL 60563

PROJ NO: 240255
ENG : DJB
DATE : 07/07/2025

SHEET TITLE

SANITARY PLAN & PROFILE

0 20' 40'
1" = 20' (HORIZONTAL)

SHEET NUMBER

C7.2

19 OF 32

EXHIBIT C

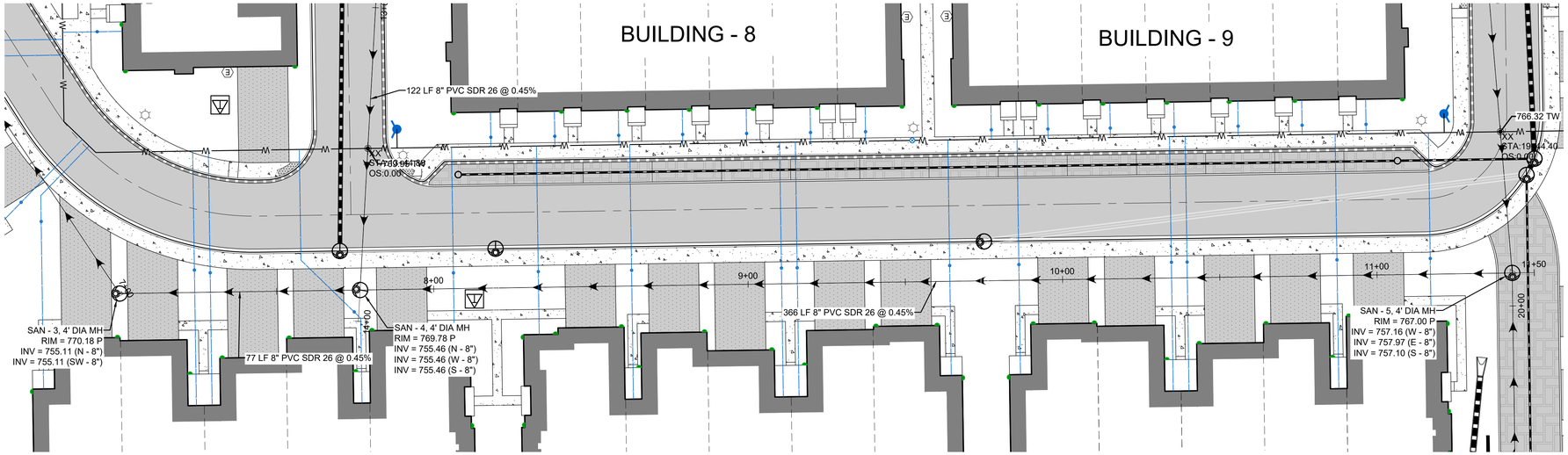

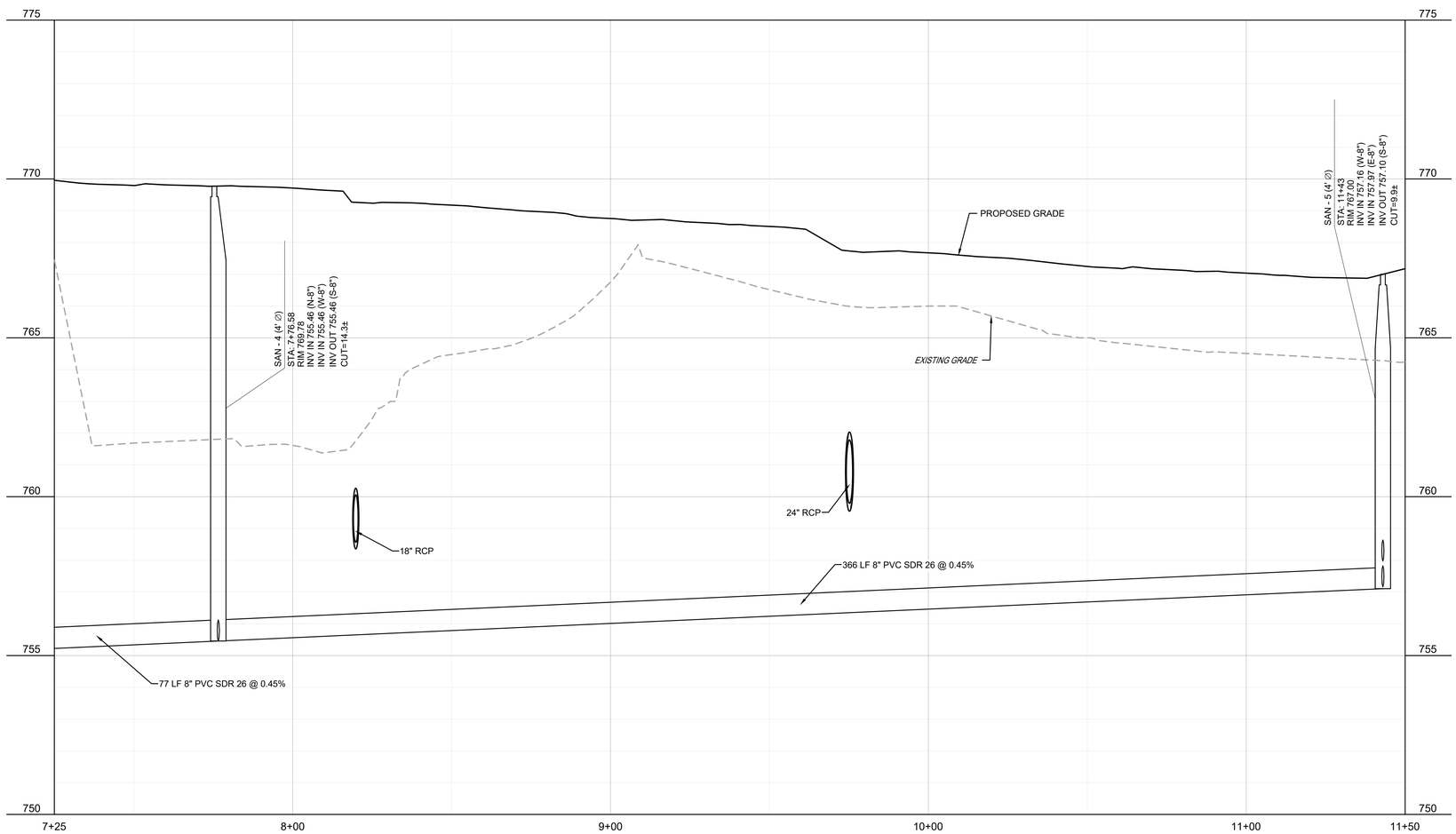

0 20' 40'
1" = 20' (HORIZONTAL)

2200 CABOT DRIVE
SUITE 325
LISLE, IL 60532
P: 630.598.0007
WWW.CAGECIVIL.COM

CAGE CIVIL ENGINEERING

FREDERICK W. THAETE
062-055840
LICENSED PROFESSIONAL ENGINEER OF ILLINOIS
EXP. 11/30/2025

REVISIONS

2 06/25/2025 CITY RESUBMITTAL
1 05/23/2025 CITY RESUBMITTAL

THIS DESIGN AND THESE DRAWINGS ARE THE PROPERTY OF CAGE ENGINEERING, INC. NO PART OF THIS WORK MAY BE REPRODUCED WITHOUT PRIOR WRITTEN PERMISSION FROM CAGE ENGINEERING, INC.

M/I HOMES OF CHICAGO, LLC

NORTHWOODS OF NAPERVILLE

1151 WARRENVILLE ROAD
NAPERVILLE, IL 60563

PROJ NO.: 240255
ENG.: DJB
DATE: 07/07/2025

SHEET TITLE

SANITARY PLAN & PROFILE

SHEET NUMBER

C7.3

20 OF 32

EXHIBIT C

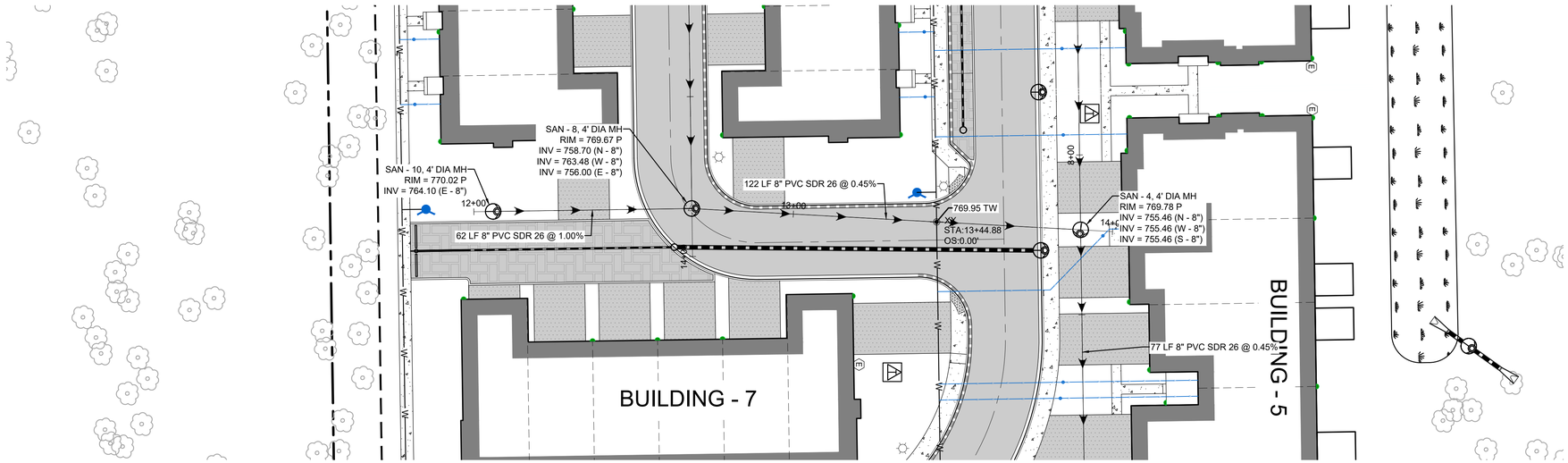

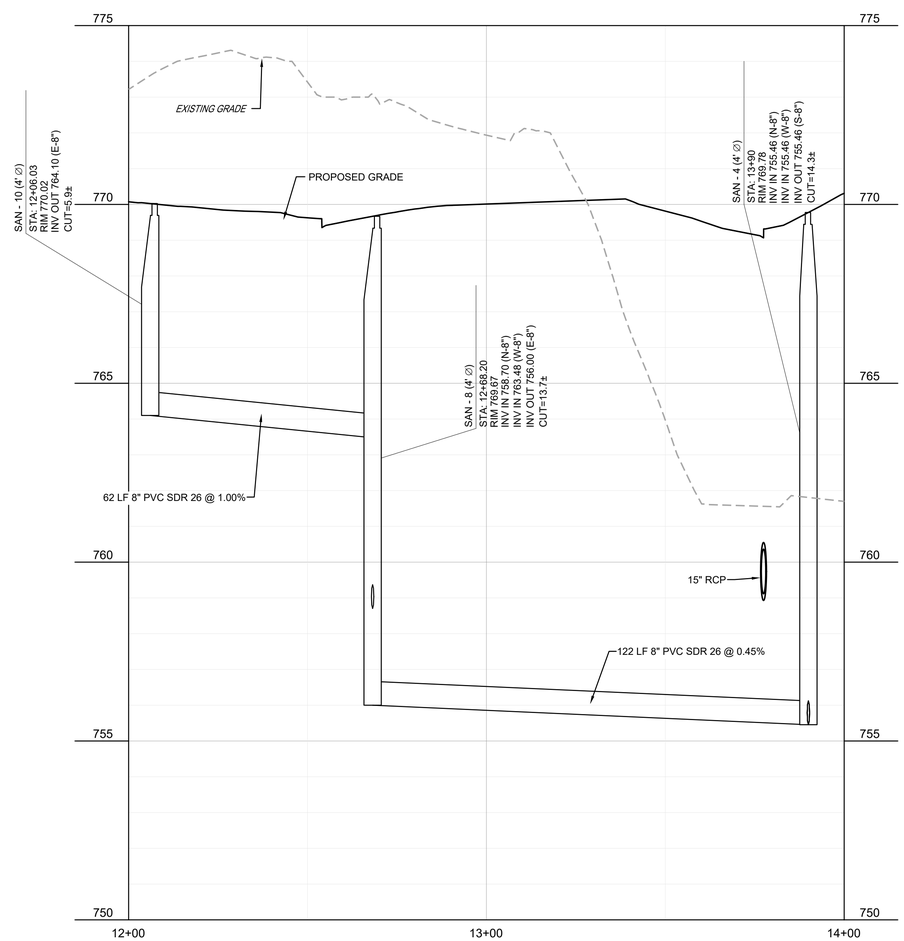

0 20' 40'
1" = 20' (HORIZONTAL)

2200 CABOT DRIVE
SUITE 325
LISLE, IL 60532
P: 630.396.0007
WWW.CAGECIVIL.COM

CAGE CIVIL ENGINEERING

FREDERICK W. THIETE
062-055840
LICENSED PROFESSIONAL ENGINEER OF ILLINOIS
EXP 11/30/2025

REVISIONS

2 06/25/2025
CITY RESUBMITTAL

1 05/23/2025
CITY RESUBMITTAL

THIS DESIGN AND THESE DRAWINGS ARE THE PROPERTY OF CAGE ENGINEERING, INC. NO PART OF THIS WORK MAY BE REPRODUCED WITHOUT PRIOR WRITTEN PERMISSION FROM CAGE ENGINEERING, INC.

M/I HOMES OF CHICAGO, LLC

NORTHWOODS OF NAPERVILLE

1151 WARRENVILLE ROAD
NAPERVILLE, IL 60563

PROJ NO.: 240255
ENG : DJB
DATE : 07/07/2025

SHEET TITLE

SANITARY PLAN & PROFILE

SHEET NUMBER

C7.4

21 OF 32

EXHIBIT C

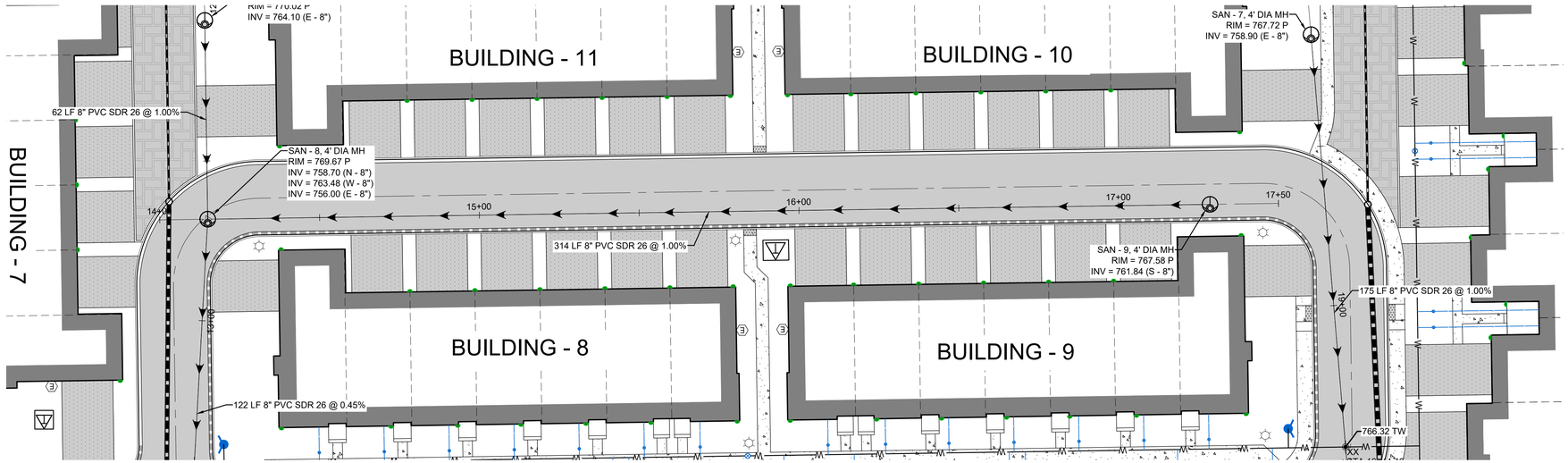

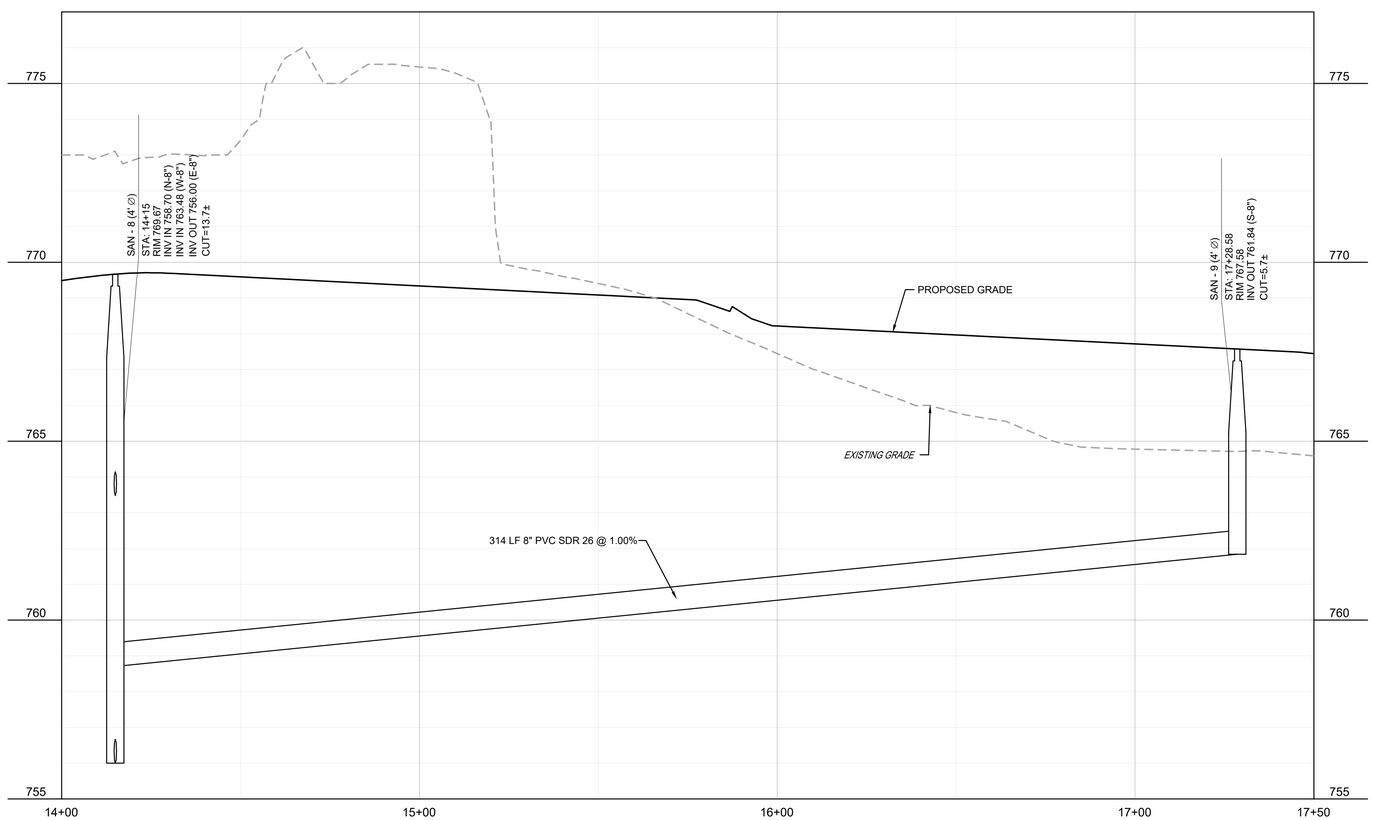

2200 CABOT DRIVE
SUITE 325
LISLE, IL 60532
P: 630.590.0007
WWW.CAGECIVIL.COM

CAGE CIVIL ENGINEERING

FREDERICK W. THAETE
062-055840
LICENSED PROFESSIONAL ENGINEER OF ILLINOIS
EXP. 11/30/2025

REVISIONS △

△ 06/25/2025
CITY RESUBMITTAL
△ 05/23/2025
CITY RESUBMITTAL

THIS DESIGN AND THESE DRAWINGS ARE THE PROPERTY OF CAGE ENGINEERING, INC. NO PART OF THIS WORK MAY BE REPRODUCED WITHOUT PRIOR WRITTEN PERMISSION FROM CAGE ENGINEERING, INC.

M/I HOMES OF CHICAGO, LLC

NORTHWOODS OF NAPERVILLE

1151 WARRENVILLE ROAD
NAPERVILLE, IL 60563

PROJ NO.: 240255
ENG : DJB
DATE : 07/07/2025

SHEET TITLE

SANITARY PLAN & PROFILE

0 20' 40'
1" = 20' (HORIZONTAL)

SHEET NUMBER

C7.5

22 OF 32

EXHIBIT C

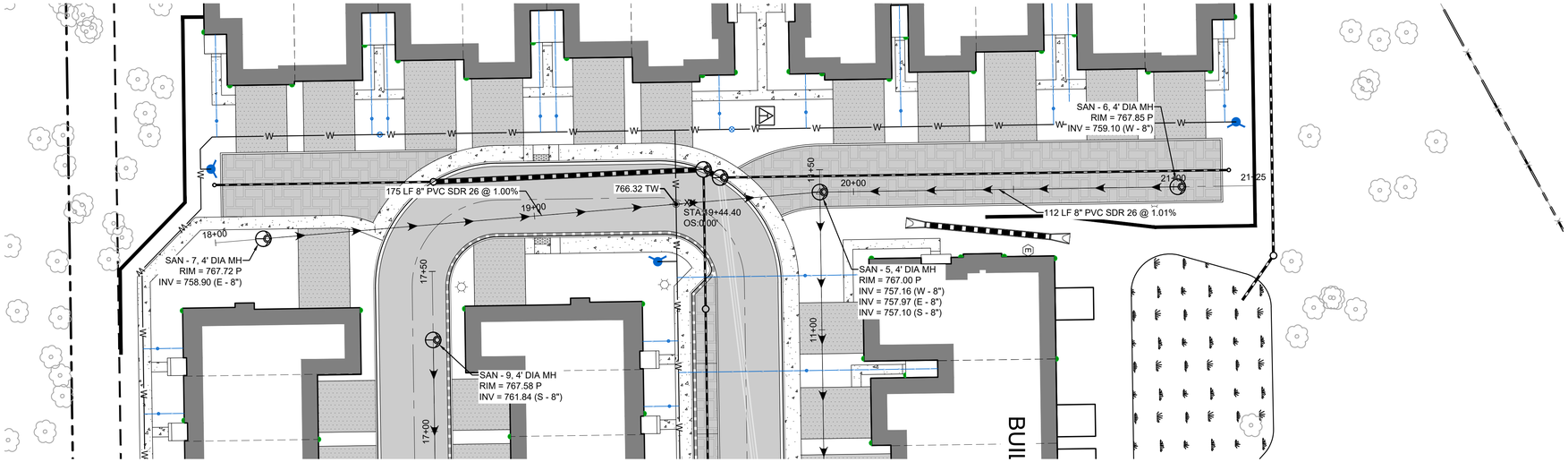

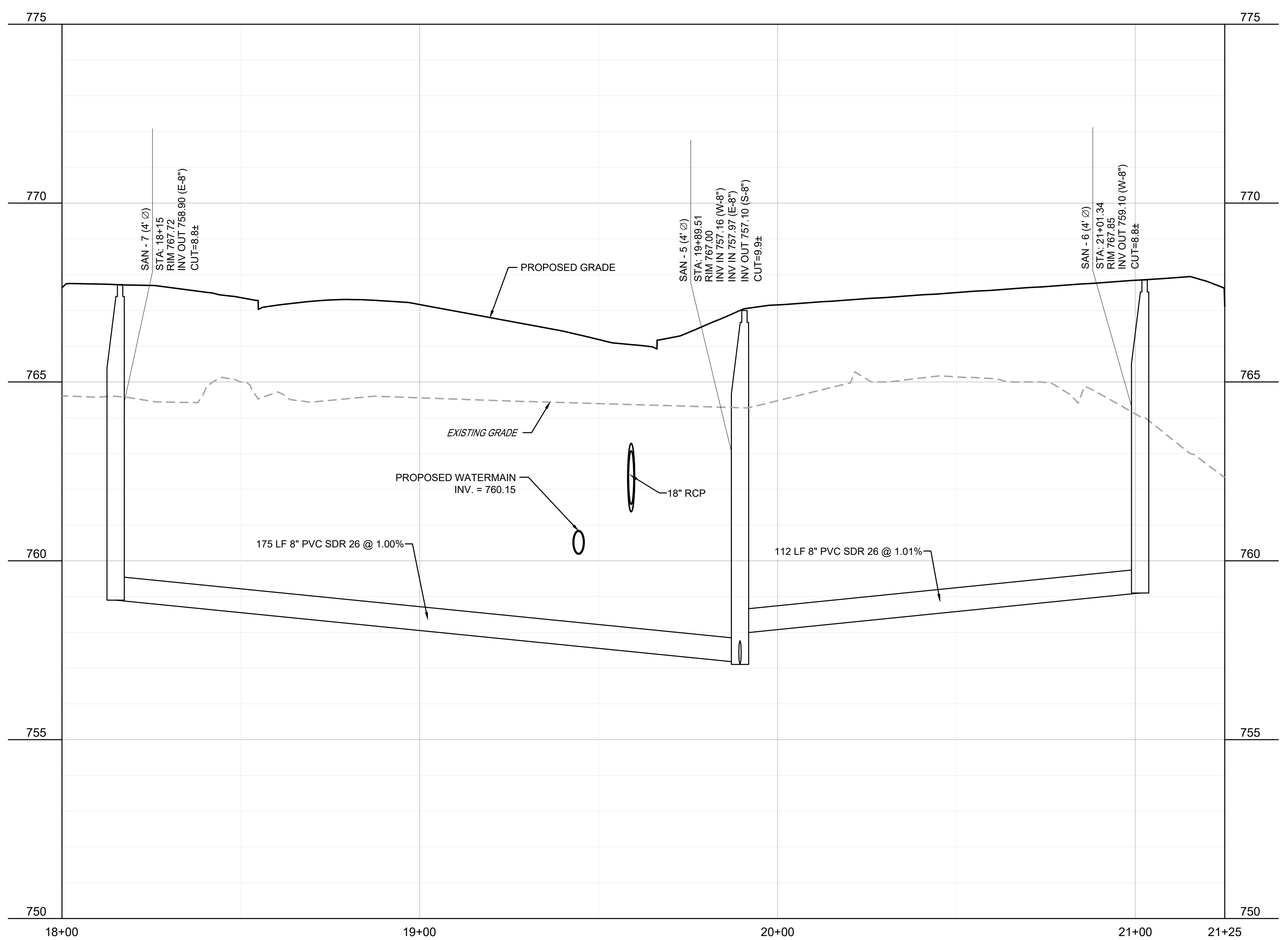

2200 CABOT DRIVE
SUITE 325
LISLE, IL 60532
P: 630.596.0007
WWW.CAGECIVIL.COM

CAGE CIVIL ENGINEERING

FREDERICK W. THAETE
062-055840
LICENSED PROFESSIONAL ENGINEER OF ILLINOIS
EXP. 11/30/2025

REVISIONS

2 06/25/2025 CITY RESUBMITTAL
1 05/23/2025 CITY RESUBMITTAL

THIS DESIGN AND THESE DRAWINGS ARE THE PROPERTY OF CAGE ENGINEERING, INC. NO PART OF THIS WORK MAY BE REPRODUCED WITHOUT PRIOR WRITTEN PERMISSION FROM CAGE ENGINEERING, INC.

M/I HOMES OF CHICAGO, LLC

NORTHWOODS OF NAPERVILLE

1151 WARRENVILLE ROAD
NAPERVILLE, IL 60563

PROJ NO.: 240255
ENG : DJB
DATE : 07/07/2025

SHEET TITLE

SANITARY PLAN & PROFILE

0 20' 40'
1" = 20" (HORIZONTAL)

SHEET NUMBER

C7.6

23 OF 32

EXHIBIT C

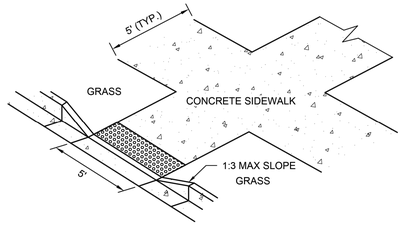

ISOMETRIC VIEW

NOTES:

1. ALL AGGREGATE SUB-BASE SHALL BE MECHANICALLY COMPACTED.
2. SIDEWALK THICKNESS AT CURB RAMPS SHALL BE A MINIMUM OF 6" PCC ON 2" AGGREGATE SUB BASE.
3. SIDEWALK CONSTRUCTION SHALL FOLLOW APPLICABLE IDOT STANDARDS.
4. SIDEWALKS SHALL FOLLOW CURRENT ADA GUIDELINES.

APPLICABLE IDOT STANDARD DETAILS (USE LATEST REVISION:

424001-XX	PERPENDICULAR CURB RAMPS FOR SIDEWALKS
424006-XX	DIAGONAL CURB RAMPS FOR SIDEWALKS
424011-XX	CORNER PARALLEL CURB RAMPS FOR SIDEWALKS
424016-XX	MID-BLOCK CURB RAMPS FOR SIDEWALKS
424021-XX	DEPRESSED CORNER FOR SIDEWALKS
424026-XX	ENTRANCE/ALLEY PEDESTRIAN CROSSINGS
424031-XX	MEDIAN PEDESTRIAN CROSSINGS
606001-XX	CONCRETE CURB TYPE B AND COMB CONCRETE CURB AND GUTTER

APPROVED ADA DETECTABLE WARNING TILES:

1. ADA SOLUTIONS - CAST IN PLACE REPLACEABLE
2. ARMOR TILE - CAST IN PLACE
3. DETECTILE - SLIMTEK II
4. TUFTILE - POLYMER WET-SET

City of Naperville STANDARD DETAIL | CURB RAMPS | REVISED: 08/01/2018 | SHEET 1 OF 1 | PAVEMENT 32 | 590.32

CURB RAMP DETAIL
Scale: NOT TO SCALE

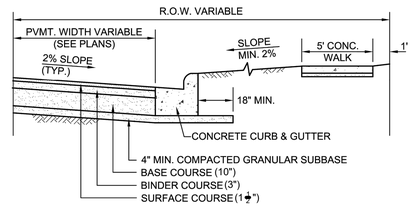

FLEXIBLE PAVEMENT

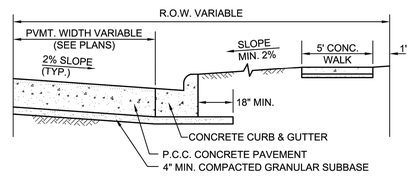

RIGID PAVEMENT

City of Naperville STANDARD DETAIL | TYPICAL PAVEMENT DETAILS | REVISED: 01/01/2013 | SHEET 1 OF 1 | PAVEMENT 10 | 590.10

TYPICAL PAVEMENT DETAIL
Scale: NOT TO SCALE

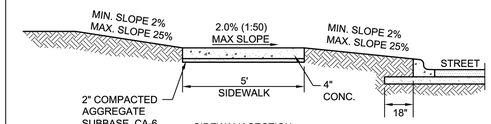

SIDEWALK SECTION

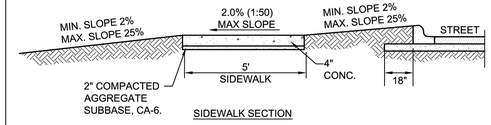

SIDEWALK SECTION

NOTES:

1. CONCRETE SHALL BE IDOT CLASS SI.
2. MINIMUM SIDEWALK THICKNESS SHALL BE 4".
3. SIDEWALK THICKNESS ACROSS DRIVEWAYS SHALL BE AT A MINIMUM 6" FOR RESIDENTIAL DRIVEWAYS AND 8" FOR COMMERCIAL DRIVEWAYS.
4. MAXIMUM LONGITUDINAL SLOPE SHALL NOT EXCEED 5% (20:1). FOR ANY SLOPE IN EXCESS OF 5%, ALL REQUIREMENTS OF THE ILLINOIS ACCESSIBILITY CODE (LATEST EDITION) SHALL BE MET.
5. MINIMUM TRANSVERSE SLOPE SHALL BE 1.0% (1:100). MAXIMUM TRANSVERSE SLOPE SHALL BE 2.0% (1:50).
6. A MINIMUM 2" AGGREGATE SUBBASE (CA-6) SHALL BE PROVIDED. (4" THROUGH COMMERCIAL DRIVEWAYS).
7. AGGREGATE SUBBASE SHALL BE MECHANICALLY COMPACTED.
8. ALL SIDEWALKS SHALL BE PROMPTLY BACKFILLED AND PROTECTED FROM DAMAGE.
9. SIDEWALK CONSTRUCTION SHALL FOLLOW APPLICABLE IDOT STANDARDS.
10. SIDEWALKS SHALL FOLLOW CURRENT ADA GUIDELINES.

City of Naperville STANDARD DETAIL | SIDEWALK | REVISED: 01/01/2013 | SHEET 1 OF 1 | PAVEMENT 30 | 590.30

SIDEWALK DETAIL
Scale: NOT TO SCALE

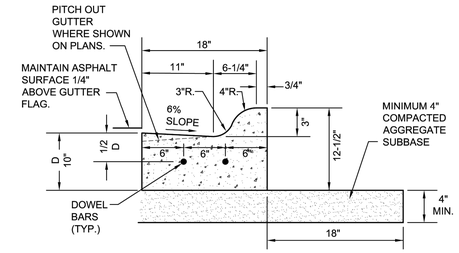

NOTES:

1. 3/4" PREFORMED BITUMINOUS EXPANSION JOINT WITH TWO (2) NUMBER 6 COATED SMOOTH DOWEL BARS (3/4" DIA. X 18") WITH GREASE CAPS SHALL BE PLACED EVERY 15', 10' EITHER SIDE OF DRAINAGE STRUCTURES, P.C.'S, RADIUS POINTS AND BACK OF CUL-DE-SACS. WHEN EXPANSION JOINTS ARE CONSTRUCTED ADJACENT TO EXISTING CURB & GUTTER THE EXISTING CURB SHALL BE DRILLED AND TWO (2) NUMBER 6 COATED SMOOTH DOWEL BARS (3/4" X 18") GROUTED IN PLACE. GREASE CAPS SHALL BE PLACED ON THE SIDE OF THE NEW CURB AND GUTTER SHALL HAVE A PINCHED STOP THAT WILL PROVIDE A MINIMUM 1" EXPANSION.
2. TOOLED CONTROL JOINTS OR SAWCUTS SHALL BE MADE EVERY 15'.
3. SAWCUTS SHALL BE MADE WITHIN TWENTY-FOUR (24) HOURS AND SEALED WITH A CITY APPROVED JOINT SEALANT. JOINTS SHALL BE CLEAN AND DRY PRIOR TO APPLICATION OF SEALANT.
4. FOR CURB AND GUTTER CONSTRUCTED OVER UTILITY TRENCHES, TWO (2) EPOXY COATED REINFORCING BARS (NO. 4) SHALL BE PLACED IN THE CURB AND GUTTER, CENTERED OVER THE TRENCH.

City of Naperville STANDARD DETAIL | M3.12 MOUNTABLE CURB & GUTTER | REVISED: 01/01/2013 | SHEET 1 OF 1 | PAVEMENT 22 | 590.22

M3.12 CURB & GUTTER DETAIL
Scale: NOT TO SCALE

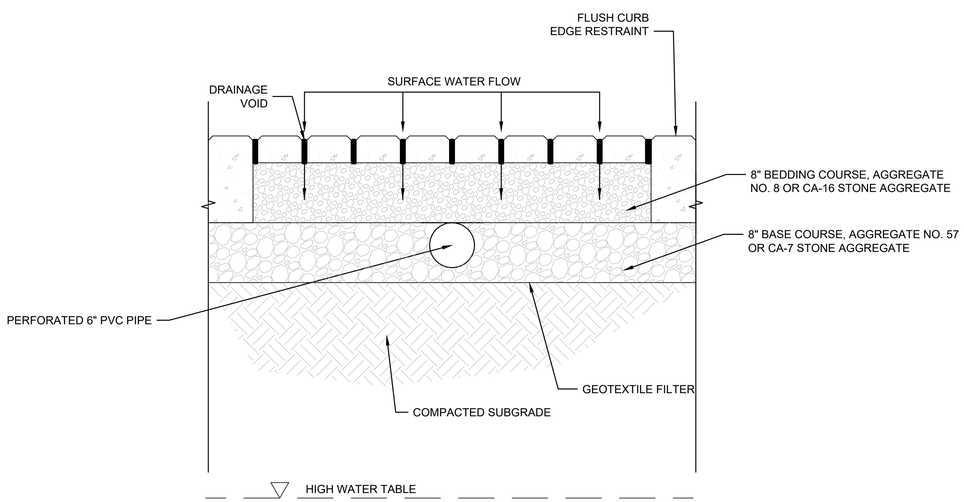

PERMEABLE PAVER DETAIL
Scale: NOT TO SCALE

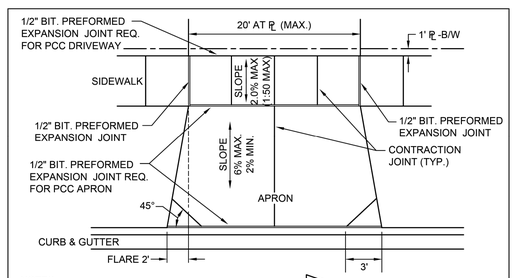

NOTES:

1. DRIVEWAYS SHALL NOT EXCEED 20' IN WIDTH MEASURED AT THE RIGHT-OF-WAY LINE.
2. DRIVEWAYS SHALL NOT ENCROACH OVER THE PROPERTY LINE EXTENSION IN THE PARKWAY.
3. DRIVEWAYS SHALL NOT BE CONSTRUCTED IN EASEMENTS.
4. ALL AGGREGATE SUB-BASE SHALL BE MECHANICALLY COMPACTED.
5. SIDEWALK SHALL CONTINUE THROUGH DRIVEWAYS.
6. SIDEWALK THICKNESS ACROSS DRIVEWAYS SHALL BE A MINIMUM OF 6" PCC ON 2" AGGREGATE SUB BASE.
7. EXPANSION JOINT MATERIAL MUST MATCH THE FULL DEPTH OF THE PAVEMENT.
8. SIDEWALK CONSTRUCTION SHALL FOLLOW APPLICABLE IDOT STANDARDS.
9. SIDEWALKS SHALL FOLLOW CURRENT ADA GUIDELINES.

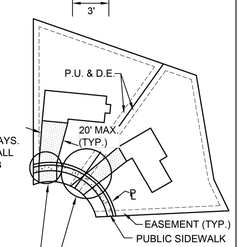

DRIVEWAYS

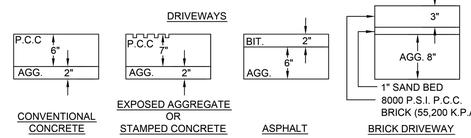

CONVENTIONAL CONCRETE | EXPOSED AGGREGATE OR STAMPED CONCRETE | ASPHALT | BRICK DRIVEWAY

City of Naperville STANDARD DETAIL | TYPICAL RESIDENTIAL DRIVEWAY DETAIL | REVISED: 08/01/2018 | SHEET 1 OF 2 | PAVEMENT 6 | 590.06

DRIVEWAY DETAIL
Scale: NOT TO SCALE

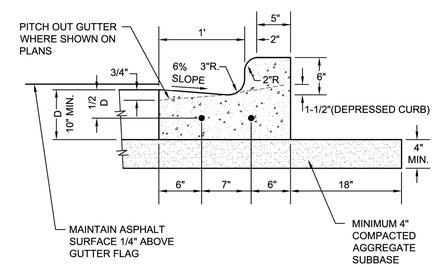

NOTES:

1. 3/4" PREFORMED BITUMINOUS EXPANSION JOINT WITH TWO (2) NUMBER 6 COATED SMOOTH DOWEL BARS (3/4" DIA. X 18") WITH GREASE CAPS SHALL BE PLACED EVERY 150', 10' EITHER SIDE OF DRAINAGE STRUCTURES, P.C.'S, RADIUS POINTS AND BACK OF CUL-DE-SACS. WHEN EXPANSION JOINTS ARE CONSTRUCTED ADJACENT TO EXISTING CURB & GUTTER THE EXISTING CURB SHALL BE DRILLED AND TWO (2) NUMBER 6 COATED SMOOTH DOWEL BARS (3/4" X 18") GROUTED IN PLACE. GREASE CAPS SHALL BE PLACED ON THE SIDE OF THE NEW CURB AND GUTTER SHALL HAVE A PINCHED STOP THAT WILL PROVIDE A MINIMUM 1" EXPANSION.
2. TOOLED CONTROL JOINTS OR SAWCUTS SHALL BE MADE EVERY 15'.
3. SAWCUTS SHALL BE MADE WITHIN TWENTY-FOUR (24) HOURS AND SEALED WITH A CITY APPROVED JOINT SEALANT. JOINTS SHALL BE CLEAN AND DRY PRIOR TO APPLICATION OF SEALANT.
4. FOR CURB AND GUTTER CONSTRUCTED OVER UTILITY TRENCHES, TWO (2) EPOXY COATED REINFORCING BARS (NO. 4) SHALL BE PLACED IN THE CURB AND GUTTER, CENTERED OVER THE TRENCH.

City of Naperville STANDARD DETAIL | B6.12 BARRIER CURB & GUTTER | REVISED: 01/01/2013 | SHEET 1 OF 1 | PAVEMENT 20 | 590.20

B6.12 CURB & GUTTER DETAIL
Scale: NOT TO SCALE

2200 CABOT DRIVE
SUITE 325
LISLE, IL 60532
P: 630.590.0007
WWW.CAGECIVIL.COM
CAGE CIVIL ENGINEERING

FREDERICK W. THAETE
062-055840
LICENSED PROFESSIONAL ENGINEER OF ILLINOIS
EXP. 11/30/2025

REVISIONS △

△1 06/25/2025 CITY RESUBMITTAL
△1 05/23/2025 CITY RESUBMITTAL

THIS DESIGN AND THESE DRAWINGS ARE THE PROPERTY OF CAGE ENGINEERING, INC. NO PART OF THIS WORK MAY BE REPRODUCED WITHOUT PRIOR WRITTEN PERMISSION FROM CAGE ENGINEERING, INC.

M/I HOMES OF CHICAGO, LLC
NORTHWOODS OF NAPERVILLE
1151 WARRENVILLE ROAD
NAPERVILLE, IL 60563

PROJ NO: 240255
ENG : DJB
DATE : 07/07/2025

SHEET TITLE
CONSTRUCTION DETAILS

SHEET NUMBER
C8.0
24 OF 32

EXHIBIT C

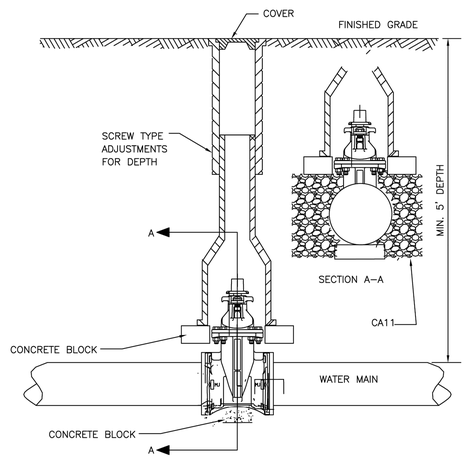

NOTES:

1. TYLER 6850 OR APPROVED EQUAL. FOR LARGER VALVES TYLER 6860 OR APPROVED EQUAL WITH #6 BASE.
2. VALVE BOXES ARE NOT ALLOWED IN PAVED AREAS – VALVE VAULT SHALL BE PROVIDED. CONTRACTOR SHALL SUBMIT IN WRITING ANY LOCATION WHERE A VAULT IS NOT INTENDED TO BE INSTALLED AND SPECIFIC REASON WHY IT CANNOT BE INSTALLED. THIS MUST BE APPROVED IN WRITING BY DPU–WATER.
3. RESTRAINT GLANDS REQUIRED ON EACH SIDE OF VALVE IF STUBBED FOR FUTURE CONNECTION OR PIPE BEND WITHIN TWO PIPE LENGTHS OF VALVE.

City of Naperville STANDARD DETAIL	VALVE BOX	WATER 5
	REVISED: 01/01/2013 · SHEET 1 OF 1	490.05

VALVE BOX DETAIL
Scale: NOT TO SCALE

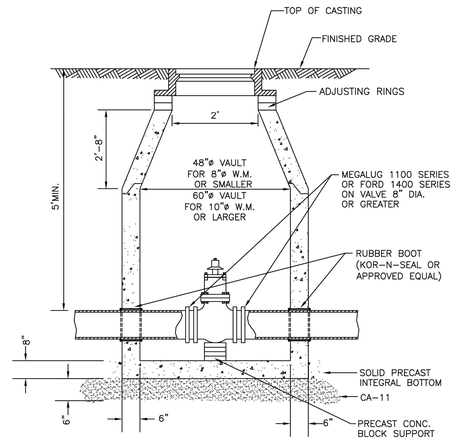

1. VALVE MUST ALIGN WITH THE CENTER OF VAULT OPENINGS.
2. CONCENTRIC CONES TO BE USED FOR VALVES 12" AND SMALLER.
3. VALVES SHALL BE RESILIENT WEDGE GATE VALVES WITH MECHANICAL JOINT ENDS TO COMPLY WITH ANSI/AWWA C515–09 OR LATEST VERSION VALVES TO BE CLOW, AMERICAN, WATEROUS, KENNEDY OR APPROVED EQUAL.
4. ALL RINGS SHALL BE HIGH DENSITY POLYETHYLENE PLASTIC (HDPE), RECYCLED RUBBER, HIGH DENSITY EXPANDING POLYSTYRENE, EXPANDED POLYPROPYLENE (EPP), OR OTHER MATERIAL AS APPROVED BY THE CITY ENGINEER. PRECAST CONCRETE RINGS, BRICKS, ROCKS, SHIMS, OR CONCRETE BLOCKS WILL NOT BE ALLOWED. TAPERED ADJUSTING RINGS SHALL BE REQUIRED WHEN THE FRAME WILL NEED TO MATCH THE SLOPE OF THE ROADWAY.

City of Naperville STANDARD DETAIL	VALVE VAULT	WATER 1
	REVISED: 10/03/2023 · SHEET 1 OF 1	490.01

VALVE VAULT DETAIL
Scale: NOT TO SCALE

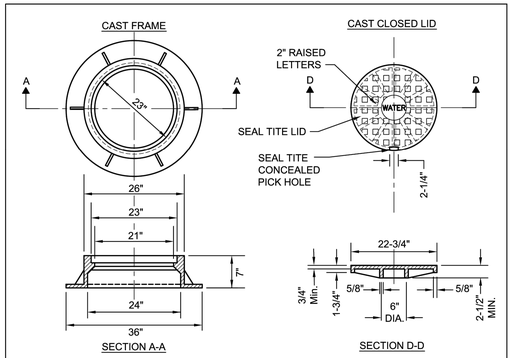

NOTES:

1. DUCTILE IRON SHALL BE GRADE 65-45-12 AND SHALL BE TESTED IN ACCORDANCE WITH FEDERAL SPECIFICATIONS.
2. ALL FRAMES AND COVERS SHALL HAVE MACHINED HORIZONTAL AND VERTICAL BEARING SURFACES. PICK HOLES SHALL NOT CREATE OPENINGS IN THE COVER.
3. THE MANHOLE COVERS SHALL HAVE RAISED LETTERS AS SHOWN.
4. ALTERNATIVE TO DUCTILE IRON LID, GREY IRON CL 35 LID MAY BE USED.
5. DIMENSIONS FOR CASTINGS ARE COMPARABLE TO EAST JORDAN 1022 OR NEENAH R-1772-C, HEAVY DUTY.
6. LIDS AND FRAMES TO MEET AASHTO M306 PROOF LOADING SPECIFICATIONS.

City of Naperville STANDARD DETAIL	VALVE VAULT - FRAME & COVER	WATER 4
	REVISED: 01/01/2013 · SHEET 1 OF 1	490.04

VALVE VAULT FRAME & COVER DETAIL
Scale: NOT TO SCALE

NOTES:

1. CHAIN AND CHAIN HOOKS SHALL BE REMOVED FROM HYDRANT
2. HYDRANT SHALL BE FACTORY PAINTED WITH 2 COATS OF TNEMEC VERSATONE 82 HS (OR APPROVED EQUAL) SAFETY ORANGE
3. ALL FASTENERS/HARDWARE BELOW GRADE SHALL BE STAINLESS STEEL. (GRADE 304 MIN.)

PERMITTED TYPES:
–WATEROUS PACER WB–67 5–1/4"
–CLOW MEDALLION 5–1/4"
–MUELLER A–423 5–1/4"

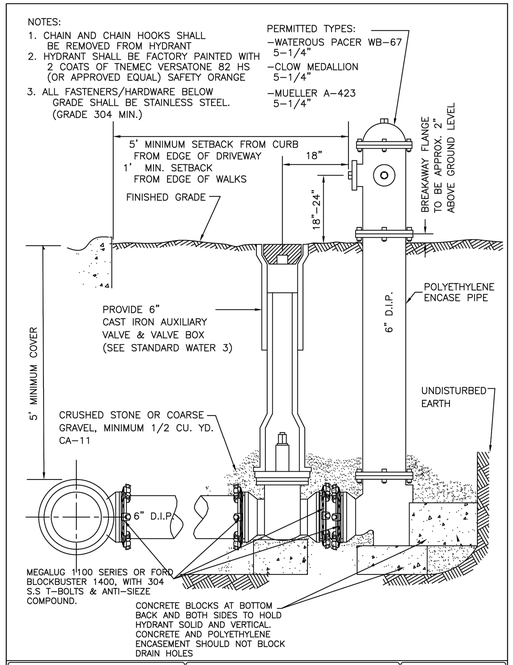

City of Naperville STANDARD DETAIL	HYDRANT	WATER 6
	REVISED: 05/15/2015 · SHEET 1 OF 1	490.06

HYDRANT DETAIL
Scale: NOT TO SCALE

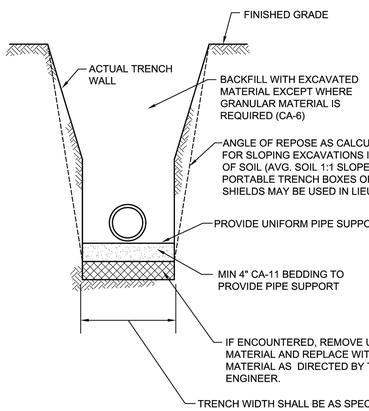

NOTES:

1. IN PAVED AREAS ALL TRENCHES SHALL BE COMPACTED IN ACCORDANCE WITH SECTION 550.07 OF THE IDOT STANDARD SPECIFICATIONS FOR ROAD AND BRIDGE CONSTRUCTION. METHOD 1. 95% MINIMUM STANDARD PROCTOR.

2. DUCTILE IRON WATER MAIN TO BE CLASS 52. ALL DUCTILE IRON PIPE IS TO BE ENCASED IN POLYETHYLENE FILM. POLYETHYLENE ENCASEMENT TO BE INSTALLED IN ACCORDANCE WITH AWWAC105A21.5-99.(OR LATEST EDITION)

3. STAINLESS STEEL NUTS, BOLTS/T-BOLTS, AND WASHERS, TYPE 304 OR BETTER, WILL BE REQUIRED ON ALL WATER MAIN INSTALLATIONS. THIS WOULD APPLY TO HYDRANTS, TAPPING SLEEVES, VALVES, FITTINGS, RESTRAINT, AND OTHER APPURTENANCES BURIED OR IN VALVE VAULTS. MECHANICAL JOINTS AND RESTRAINT GLANDS REQUIRE 304 STAINLESS STEEL T-BOLTS. AN ANTI-SEIZE COMPOUND SHALL BE FACTORY APPLIED TO NUTS OR BOLTS - ANY DAMAGE TO THIS COATING SHALL BE REPAIRED WITH FIELD-APPLIED, APPROVED ANTI-SEIZE COMPOUND THAT IS A MOLYBDENUM-BASE LUBRICANT, BOSTIK NEVER-SEEZ OR APPROVED EQUAL.

City of Naperville STANDARD DETAIL	WATER MAIN TRENCH SECTION	WATER 10
	REVISED: 01/01/2013 · SHEET 1 OF 1	490.10

WATERMAIN TRENCH SECTION DETAIL
Scale: NOT TO SCALE

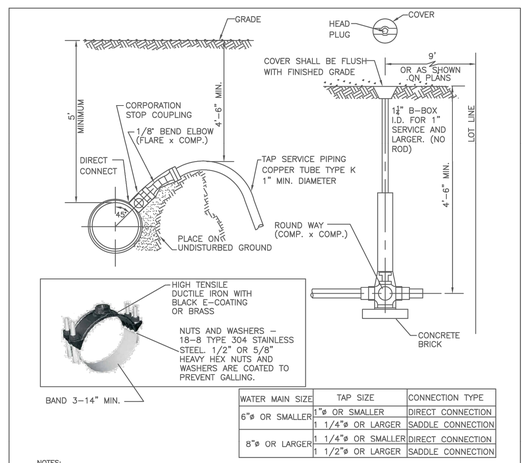

WATER MAIN SIZE	TAP SIZE	CONNECTION TYPE
6"ø OR SMALLER	1"ø OR SMALLER	DIRECT CONNECTION
	1 1/4"ø OR LARGER	SADDLE CONNECTION
8"ø OR LARGER	1 1/4"ø OR SMALLER	DIRECT CONNECTION
	1 1/2"ø OR LARGER	SADDLE CONNECTION

NOTES:

1. CORPORATION IS TO BE FLARING TYPE (FORD F–600 OR EQUAL BY MUELLER OR A.Y. MCDONALD). FOR SERVICE SIZE 1¼": A.Y. MCDONALD 4701Q CORP STOP THREADED INLET TO COMPRESSION OUTLET OR EQUAL
2. 1/8" BEND ELBOW – FEMALE FLARE TO COMPRESSION: FORD LA04. OR AN APPROVED EQUAL BY MUELLER, OR A.Y. MCDONALD (NOT AVAILABLE IN IN 1¼" SIZED SEE NOTE 1.).
3. B–BOX IS ARCH PATTERN AT ROUNDWAY WITH 1–1/4" UPPER SECTION, WITH 1–1/4" BRASS PENTAGON PLUG. SCREW ON B–BOX NOT APPROVED
4. CURB STOP IS WITH COMPRESSION COUPLING – FORD B44 CURB STOP, OR EQUAL BY MUELLER, OR A.Y. MCDONALD.
5. B–BOX HAS 1¼" THREADED BRASS PENTAGON PLUG WITH THE WORD "WATER" IN RAISED LETTERS ON CAP. (1–1/4" PENT. PLUG FOR 1–1/4" ID. B–BOXES).
6. CORPORATION STOPS SHALL BE INSTALLED A MINIMUM OF 18" FROM PIPE JOINTS AND ENDS. MULTIPLE INSTALLATIONS SHOULD BE STAGGERED AROUND THE MAIN BY 22–1/2" AND SEPARATED FROM EACH OTHER BY 18".
7. WATER SERVICE LINE SMALLER THAN 3" SHALL BE TYPE K COPPER. IF JOINTS ARE REQUIRED DUE TO LENGTH OF SERVICE, THEN ONLY COMPRESSION TYPE COUPLING SHALL BE PERMITTED. NO SOLDERED OR FLARED TYPE JOINTS ARE ALLOWED.
8. SERVICE TAPS SHALL REQUIRE SADDLES IN ACCORDANCE WITH CHART BELOW. SADDLES SHALL BE STAINLESS STEEL DUAL BANDED, DUCTILE IRON OR BRASS SADDLE (FORD FS202, 202BS OR APPROVED EQUAL) REQ'D FOR TAPS.
9. ALL WATERMAIN AND APPURTENANCES MUST COMPLY WITH SECTION 1417 (A)(1)OF THE SAFER DRINKING WATER ACT (SDWA). ALL PRODUCT USED FOR DISPENSING POTABLE WATER MUST MEET BOTH THE NSF 61 AND NSF 372 TEST OF STANDARDS VIA THIRD PARTY TESTING AND CERTIFICATIONS.

City of Naperville STANDARD DETAIL	SERVICE TAP AND CONNECTION	WATER 20
	EFFECTIVE: 7/17/2020 · SHEET 1 OF 1	490.20

SERVICE TAP & CONNECTION DETAIL
Scale: NOT TO SCALE

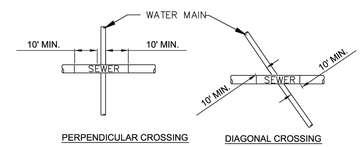

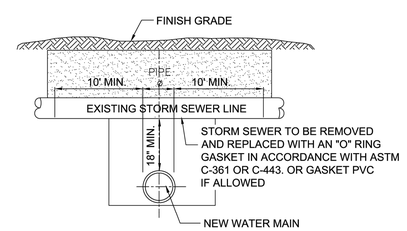

NOTE:
NEW STORM SEWER INSTALLATION SHALL BE GASKETED STRUCTURE TO STRUCTURE

City of Naperville STANDARD DETAIL	WATER MAIN PROTECTION FROM EXISTING STORM SEWER PIPE	WATER 14
	REVISED: 01/01/2013 · SHEET 1 OF 1	490.14

WATERMAIN PROTECTION FROM EXISTING STORM SEWER PIPE DETAIL
Scale: NTS

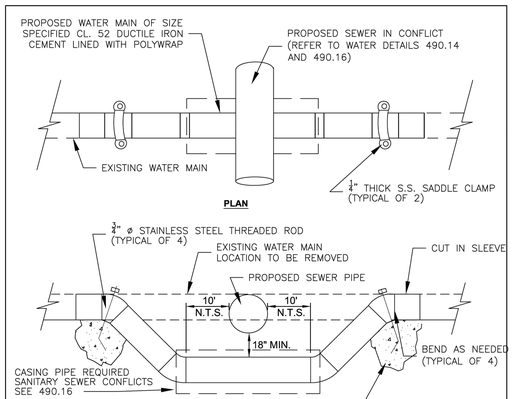

1.) PIPING TO BE DISINFECTED DURING INSTALLATION. ALL NEW JOINTS SHALL BE INSTALLED WITH MEG–A–LUG, OR APPROVED EQUAL, JOINT RESTRAINT. CONTRACTOR SHALL USE 22 1/2 OR 11 1/4 DEGREE BENDS IN LIEU OF 45 DEGREE BENDS WHERE POSSIBLE.

2.) VERTICAL THRUST BLOCKS UNDER BENDS SHALL BE 1 C.Y. MINIMUM OR SIZED AS NEEDED TO RESTRAIN BENDS. CONCRETE TO SUFFICIENTLY CURE PRIOR TO TESTING. POURED CONCRETE SHALL NOT BE PLACED AROUND PIPE BOLTS OR HINDER FUTURE MAINTENANCE.

POURED IN PLACE CONCRETE (CLASS X) FOR VERTICAL THRUST BLOCK. BEND THREADED ROD TO PREVENT PULLOUT. (TYPICAL OF 2)

3.) POLYWRAP SHOULD BE IN SHEETS INSTALLED UNDER WATER MAIN WITH ALL PIPING JOINTS EXPOSED UNTIL AFTER PRESSURE TEST IS COMPLETE, THEN WRAPPED AND TAPED IN PLACE PRIOR TO BACKFILLING.

4.) SEWERS INSTALLED ABOVE WATER MAIN SHALL BE DESIGNED TO PROVIDE WATER MAIN PROTECTION AS REQUIRED BY I.E.P.A

5.) ALL PIPING TO BE FLUSHED AND TWO SAFE CONSECUTIVE BACTERIAL SAMPLES TAKEN PRIOR TO CITY PLACING MAIN BACK IN SERVICE.

City of Naperville STANDARD DETAIL	LOWERING/ADJUSTING WATER MAIN	WATER 13
	REVISED: 05/15/2015 · SHEET 1 OF 1	490.13

LOWERING/ADJUSTING WATERMAIN DETAIL
Scale: NOT TO SCALE

2200 CABOT DRIVE
SUITE 325
LISLE, IL 60532
P: 630.590.0007
WWW.CAGECIVIL.COM
CAGE CIVIL ENGINEERING

FREDERICK W. THIETE
062-055840
LICENSED PROFESSIONAL ENGINEER
OF ILLINOIS
EXP. 11/30/2025

REVISIONS △

△ 06/25/2025 CITY RESUBMITTAL
△ 05/23/2025 CITY RESUBMITTAL

THIS DESIGN AND THESE DRAWINGS ARE THE PROPERTY OF CAGE ENGINEERING, INC. NO PART OF THIS WORK MAY BE REPRODUCED WITHOUT PRIOR WRITTEN PERMISSION FROM CAGE ENGINEERING, INC.

M/I HOMES OF CHICAGO, LLC
NORTHWOODS OF NAPERVILLE
1151 WARRENVILLE ROAD
NAPERVILLE, IL 60563

PROJ NO: 240255
ENG : DJB
DATE : 07/07/2025

SHEET TITLE
CONSTRUCTION DETAILS

SHEET NUMBER
C8.1
25 OF 32

EXHIBIT C

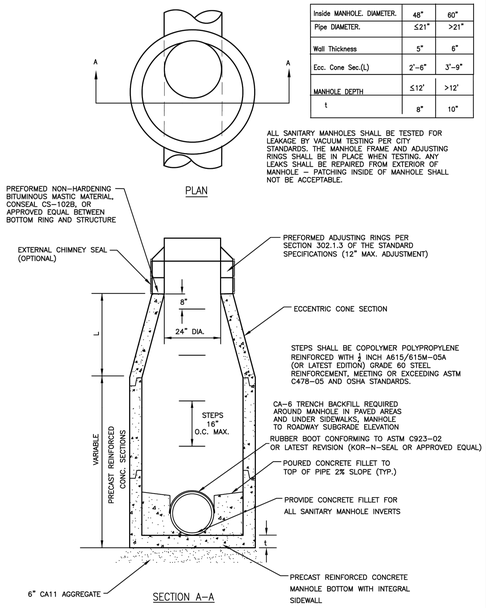

Inside MANHOLE. DIAMETER.	48"	60"
Pipe DIAMETER.	≤21"	>21"
Wall Thickness	5"	6"
Ecc. Cone Sec.(L)	2'-6"	3'-9"
MANHOLE DEPTH	≤12'	>12'
t	8"	10"

ALL SANITARY MANHOLES SHALL BE TESTED FOR LEAKAGE BY VACUUM TESTING PER CITY STANDARDS. THE MANHOLE FRAME AND ADJUSTING RINGS SHALL BE IN PLACE WHEN TESTING. ANY LEAKS SHALL BE REPAIRED FROM EXTERIOR OF MANHOLE – PATCHING INSIDE OF MANHOLE SHALL NOT BE ACCEPTABLE.

City of Naperville STANDARD DETAIL | SANITARY SEWER MANHOLE | REVISED: 08/01/2018 | SHEET 1 OF 1 | SANITARY 1 | 390.01

SANITARY MANHOLE DETAIL
Scale: NOT TO SCALE

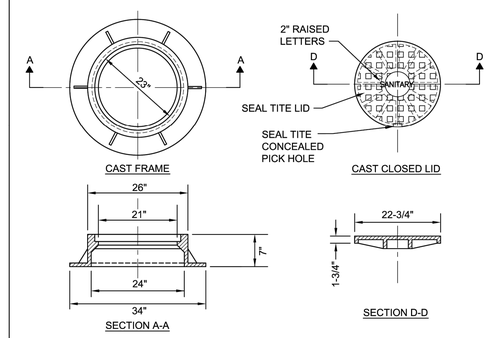

NOTES:

1) DUCTILE IRON SHALL BE GRADE 65-45-12 AND SHALL BE TESTED IN ACCORDANCE WITH FEDERAL SPECIFICATIONS.

2) ALL FRAMES AND COVERS SHALL HAVE MACHINED HORIZONTAL AND VERTICAL BEARING SURFACES. PICK HOLES SHALL NOT CREATE OPENINGS IN THE COVER.

3) THE MANHOLE COVERS SHALL HAVE 2" RAISED LETTERS AS SHOWN.

4) ALTERNATIVE TO DUCTILE IRON LID, GREY IRON CL 35 LID MAY BE USED.

5) CASTINGS ARE SHALL BE EAST JORDAN 1022-Z3; NEENAH R-1772 OR APPROVED EQUAL.

6) WATERPROOF, BOLTDOWN FRAME AND COVER SHALL BE USED IN FLOOD PLAIN AREA, AND AS NOTED ON THE PLANS. NEENAH R-1916-F1, EAST JORDAN IRON WORKS 1022-Z1PT OR APPROVED EQUAL.

7. LIDS AND FRAMES TO MEET ASSHTO M306 PROOF LOADING SPECIFICATIONS

City of Naperville STANDARD DETAIL | SANITARY MANHOLE - FRAME & COVER | REVISED: 01/01/2013 | SHEET 1 OF 1 | SANITARY 6 | 390.06

SANITARY MANHOLE FRAME & COVER DETAIL
Scale: NOT TO SCALE

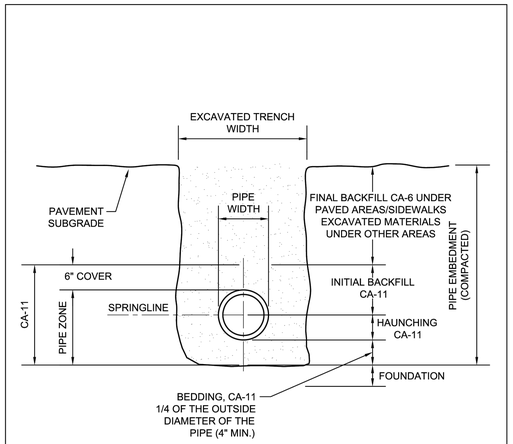

NOTES:

1. IN PAVED AREAS, ALL TRENCHES MUST BE COMPACTED IN CONFORMANCE WITH SECTION 550.07 OF THE IDOT STANDARD SPECIFICATIONS FOR ROAD & BRIDGE CONSTRUCTION.

2. IF FOUNDATION IS UNSUITABLE TO BED PIPE, UNDERCUTS MAY BE REQUIRED AS DIRECTED BY THE ENGINEER.

City of Naperville STANDARD DETAIL | TRENCH SECTION FOR PVC PIPE | REVISED: 01/01/2013 | SHEET 1 OF 1 | SANITARY 10 | 390.10

TRENCH SECTION FOR PVC PIPE DETAIL
Scale: NOT TO SCALE

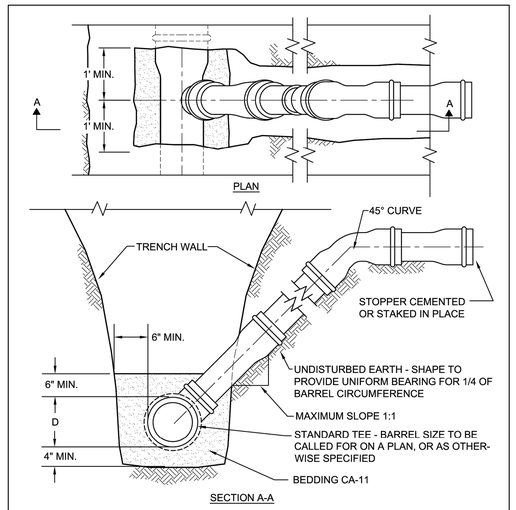

1. THE OPEN ENDS SHALL BE PROTECTED FROM DEBRIS AND GROUNDWATER ENTERING THE LATERAL WITH AN APPROVED PLUG.

2. MAXIMUM SLOPE SHALL BE LESS THAN 1:1 WHEN IT IS NECESSARY TO SECURE BEDDING IN UNDISTURBED EARTH.

3. WHEN A SERVICE CONNECTION IS TAPPED INTO PVC MAIN, THEN A SEWER SADDLE SHALL BE USED. GENECO TYPE "SEALTITE" OR APPROVED EQUAL. BANDS, NUTS AND BOLTS MUST BE 304 STAINLESS STEEL.

4. SDR 26 PVC PIPE MEETING REQUIREMENTS OF ASTM D-2241-05 AND JOINTS CONFORMING TO ASTM D-3139-98(2005) OR LATEST EDITIONS.

City of Naperville STANDARD DETAIL | RISE FOR SERVICE LATERAL | REVISED: 01/01/2013 | SHEET 1 OF 1 | SANITARY 20 | 390.20

RISE FOR SERVICE LATERAL DETAIL
Scale: NOT TO SCALE

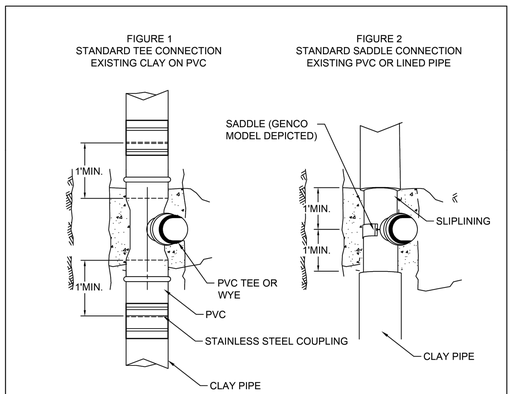

STANDARD TEE CONNECTION-FIGURE 1

1. BYPASS OR RESTRICT FLOW IN PIPE AS REQUIRED.
2. SAW CUT AND REMOVE EXISTING PIPE TO MINIMUM EXTENT SHOWN IN FIGURE 1.
3. INSTALL STANDARD PVC TEE AND PIPE AS SHOWN, PVC SHALL BE SDR26, ASTM 2241.
4. FLEXIBLE COUPLING SHALL BE A NON-SHEARING TYPE TRANSITION COUPLING: FERNCO STRONG BACK RC 1000 SERIES, CASCADE STYLE CSS COUPLING, OR APPROVED EQUAL.

STANDARD SADDLE CONNECTION FIGURE 2

1. FOR LINED PIPE CAREFULLY REMOVE OLD CLAY PIPE TO MINIMUM EXTENT SHOWN WITHOUT DAMAGING LINER PIPE.
2. HOLES FOR SADDLE INLET SHALL BE LAID OUT USING SADDLE AS TEMPLATE AND CUT WITH APPROPRIATE EQUIPMENT NOT DAMAGE THE PIPE TO REMAIN. HOLE TO BE BE DE BURRED AND BEVELED WHERE REQUIRED TO PROVIDE HOLE SLOPE TO CONFORM TO THE FITTING.
3. SADDLE SHALL BE SEALTITE TEE "U" MODEL 40 BY GENCO, CASCADE STYLE CSWRY OR CSWRT, OR APPROVED EQUAL.

City of Naperville STANDARD DETAIL | SANITARY SEWER SERVICE CONNECTION | REVISED: 08/01/2018 | SHEET 1 OF 1 | SANITARY 21 | 390.21

SANITARY SEWER SERVICE CONNECTION DETAIL
Scale: NOT TO SCALE

THE INSTALLATION OF THIS APPLICATION MUST BE APPROVED IN WRITING BY THE DEPARTMENT OF PUBLIC UTILITIES WATER CIVIL ENVIRONMENTAL ENGINEERING DIVISION

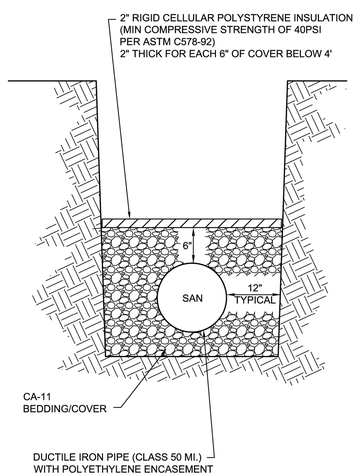

City of Naperville STANDARD DETAIL | SANITARY SEWER PIPE INSULATION | REVISED: 01/01/2013 | SHEET 1 OF 1 | SANITARY 22 | 390.22

SANITARY SEWER PIPE INSULATION DETAIL
Scale: NOT TO SCALE

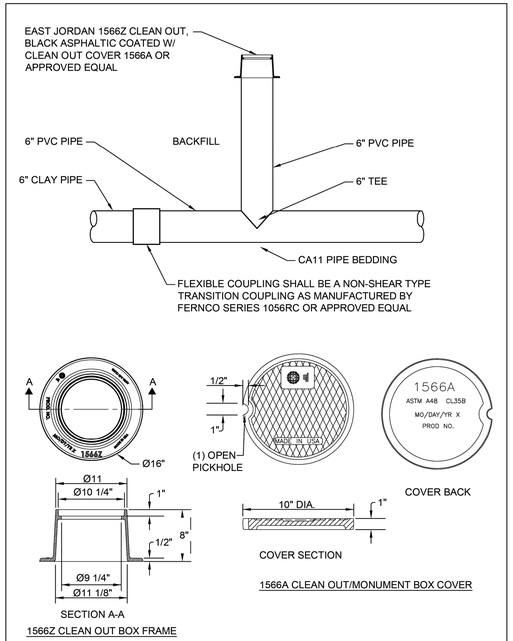

City of Naperville STANDARD DETAIL | SANITARY SEWER CLEANOUT | REVISED: 10/04/2023 | SHEET 1 OF 1 | SANITARY 23 | 390.23

SANITARY SEWER CLEANOUT DETAIL
Scale: NOT TO SCALE

2200 CABOT DRIVE
SUITE 325
LISLE, IL 60532
P: 630.590.0007
WWW.CAGECIVIL.COM
CAGE CIVIL ENGINEERING
FREDERICK W. THAETE 062-055840 LICENSED PROFESSIONAL ENGINEER OF ILLINOIS
EXP. 11/30/2025

REVISIONS △

△1 06/25/2025 CITY RESUBMITTAL
△1 05/23/2025 CITY RESUBMITTAL

THIS DESIGN AND THESE DRAWINGS ARE THE PROPERTY OF CAGE ENGINEERING, INC. NO PART OF THIS WORK MAY BE REPRODUCED WITHOUT PRIOR WRITTEN PERMISSION FROM CAGE ENGINEERING, INC.

M/I HOMES OF CHICAGO, LLC
NORTHWOODS OF NAPERVILLE
1151 WARRENVILLE ROAD
NAPERVILLE, IL 60563

PROJ NO.: 240255
ENG : DJB
DATE : 07/07/2025

SHEET TITLE
CONSTRUCTION DETAILS

SHEET NUMBER
C8.2
26 OF 32

EXHIBIT C

WHEN MANHOLE DEPTH IS 12 FT OR LESS T = 8 INCHES
WHEN MANHOLE DEPTH IS OVER 12 FT. T = 10 INCHES

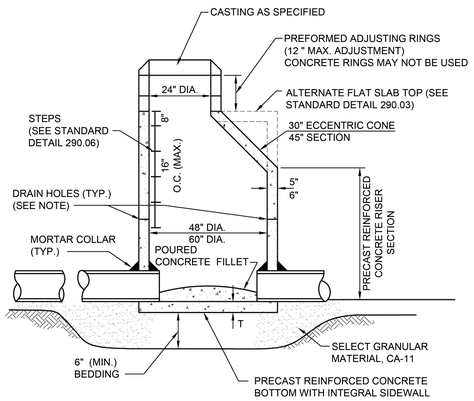

NOTE:

A MINIMUM OF 4 PRECAST OR DRILLED 1" DIAMETER HOLES SHALL BE PROVIDED WITHIN 1' OF THE LOWEST PIPE INVERT. THE HOLES SHALL BE DISTRIBUTED EQUIDISTANT AROUND THE PERIMETER OF THE STRUCTURE. A 1' BY 1' SQUARE OF UNDERDRAIN FILTER CLOTH MATERIAL SHALL BE FIXED OVER EACH DRAIN HOLE ON THE OUTSIDE OF THE STRUCTURE WITH MASTIC MATERIAL TO PREVENT SLIPPAGE DURING BACKFILLING.

City of Naperville STANDARD DETAIL	STORM MANHOLE- TYPE A	STORM 1
	REVISED: 08/01/2018 / SHEET 1 OF 1	290.01

STORM MANHOLE TYPE A DETAIL
Scale: NOT TO SCALE

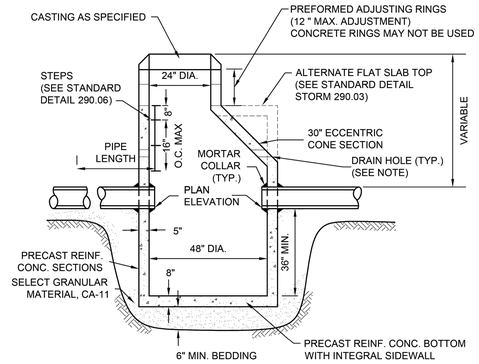

NOTE:

A MINIMUM OF 4 PRECAST OR DRILLED 1" DIAMETER HOLES SHALL BE PROVIDED WITHIN 1' OF THE LOWEST PIPE INVERT. THE HOLES SHALL BE DISTRIBUTED EQUIDISTANT AROUND THE PERIMETER OF THE STRUCTURE. A 1' BY 1' SQUARE OF UNDERDRAIN FILTER CLOTH MATERIAL SHALL BE FIXED OVER EACH DRAIN HOLE ON THE OUTSIDE OF THE STRUCTURE WITH MASTIC MATERIAL TO PREVENT SLIPPAGE DURING BACKFILLING.

City of Naperville STANDARD DETAIL	CATCH BASIN - TYPE A	STORM 2
	REVISED: 08/01/2018 / SHEET 1 OF 1	290.02

CATCH BASIN TYPE A DETAIL
Scale: NOT TO SCALE

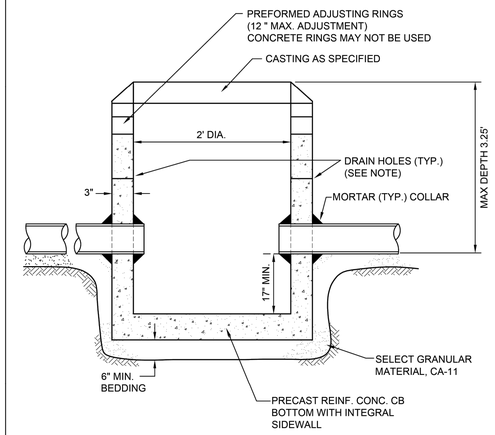

NOTE:

A MINIMUM OF 4 PRECAST OR DRILLED 1" DIAMETER HOLES SHALL BE PROVIDED WITHIN 1' OF THE LOWEST PIPE INVERT. THE HOLES SHALL BE DISTRIBUTED EQUIDISTANT AROUND THE PERIMETER OF THE STRUCTURE. A 1' BY 1' SQUARE OF UNDERDRAIN FILTER CLOTH MATERIAL SHALL BE FIXED OVER EACH DRAIN HOLE ON THE OUTSIDE OF THE STRUCTURE WITH MASTIC MATERIAL TO PREVENT SLIPPAGE DURING BACKFILLING.

City of Naperville STANDARD DETAIL	CATCH BASIN - TYPE C	STORM 4
	REVISED: 08/01/2018 / SHEET 1 OF 1	290.04

CATCH BASIN TYPE C DETAIL
Scale: NOT TO SCALE

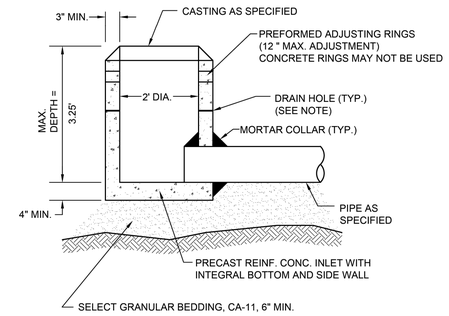

NOTE:

IN PAVED AREAS A MINIMUM OF 4 PRECAST OR DRILLED 1" DIAMETER HOLES SHALL BE PROVIDED WITHIN 1' OF THE LOWEST PIPE INVERT. THE HOLES SHALL BE DISTRIBUTED EQUIDISTANT AROUND THE PERIMETER OF THE STRUCTURE. A 1' BY 1' SQUARE OF UNDERDRAIN FILTER CLOTH MATERIAL SHALL BE FIXED OVER EACH DRAIN HOLE ON THE OUTSIDE OF THE STRUCTURE WITH MASTIC MATERIAL TO PREVENT SLIPPAGE DURING BACKFILLING.

City of Naperville STANDARD DETAIL	INLET - TYPE A	STORM 5
	REVISED: 08/01/2018 / SHEET 1 OF 1	290.05

INLET TYPE A DETAIL
Scale: NOT TO SCALE

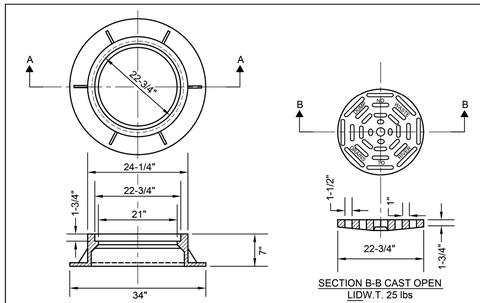

NOTES:

1. FRAME AND GRATE (LID) SHALL BE NEENAH R-2502 FOR OPEN GRATES, R-1772 FOR CLOSED LIDS; EAST JORDAN 1022-2 WITH M-1 GRATE OR TYPE A SOLID COVER, OR EQUAL APPROVED BY THE CITY ENGINEER.
2. ALL LIDS AND COVERS SHALL HAVE MACHINED SURFACES AND SEATS.
3. ALL CASTINGS SHALL BE SHOP PAINTED WITH AN ASPHALTIC BASE PAINT.
4. ALL CASTINGS SHALL INCLUDE "DUMP NO WASTE. DRAINS TO RIVER".

City of Naperville STANDARD DETAIL	FRAME & LID OR GRATE	STORM 10
	REVISED: 05/15/2015 / SHEET 1 OF 1	290.10

FRAME & LID OR GRATE DETAIL
Scale: NOT TO SCALE

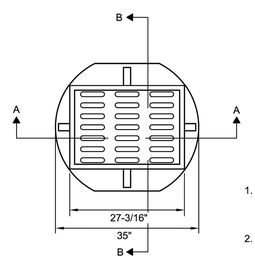

NOTES:

1. FRAME AND GRATE SHALL BE NEENAH R-3501-P, EAST JORDAN 7525, OR EQUAL APPROVED BY THE CITY ENGINEER.
2. ALL CASTING SHALL BE SHOP PAINTED WITH AN ASPHALTIC BASE PAINT.
3. ALL CASTINGS SHALL INCLUDE "DUMP NO WASTE. DRAINS TO RIVER".

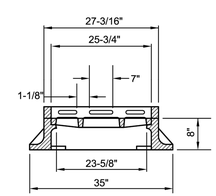

SECTION A-A

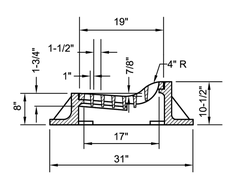

SECTION B-B

City of Naperville STANDARD DETAIL	FRAME & GRATE FOR M-3.12 CURB & GUTTER	STORM 13
	REVISED: 05/15/2015 / SHEET 1 OF 1	290.13

FRAME & GRATE FOR M3.12 C&G DETAIL
Scale: NOT TO SCALE

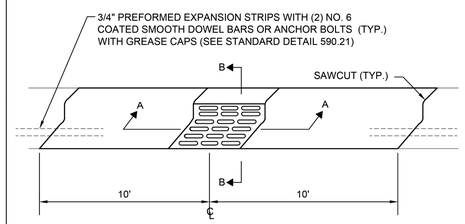

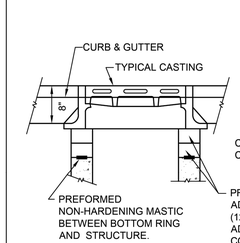

SECTION A-A

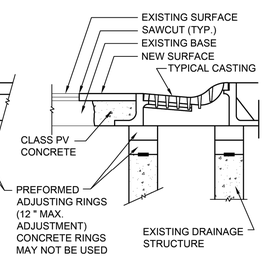

SECTION B-B

1. REMOVE & REPLACE CURB A MINIMUM OF 10' EITHER SIDE OF STRUCTURE OR TO NEAREST EXPANSION JOINT (WHICHEVER IS CLOSEST)
2. POUR CONCRETE FILLET BETWEEN CASTING AND ADJUSTING RINGS FOR LOCATIONS WHERE THE CASTING IS LARGER THAN THE ADJUSTING RING

City of Naperville STANDARD DETAIL	CASTING ADJUSTMENTS FOR STRUCTURES WITHIN THE CURB LINE	STORM 16
	REVISED: 08/01/2018 / SHEET 1 OF 1	290.16

CASTING ADJUSTMENTS DETAILS
Scale: NOT TO SCALE

2200 CABOT DRIVE
SUITE 325
LISLE, IL 60532
P: 630.598.0007
WWW.CAGECIVIL.COM
CAGE CIVIL ENGINEERING

FREDERICK W. THAETE
062-055840
LICENSED PROFESSIONAL ENGINEER OF ILLINOIS
EXP. 11/30/2025

REVISIONS

2 06/25/2025 CITY RESUBMITTAL
1 05/23/2025 CITY RESUBMITTAL

THIS DESIGN AND THESE DRAWINGS ARE THE PROPERTY OF CAGE ENGINEERING, INC. NO PART OF THIS WORK MAY BE REPRODUCED WITHOUT PRIOR WRITTEN PERMISSION FROM CAGE ENGINEERING, INC.

M/I HOMES OF CHICAGO, LLC
NORTHWOODS OF NAPERVILLE
1151 WARRENVILLE ROAD
NAPERVILLE, IL 60563

PROJ NO: 240255
ENG : DJB
DATE : 07/07/2025

SHEET TITLE
CONSTRUCTION DETAILS

SHEET NUMBER
C8.3
27 OF 32

EXHIBIT C

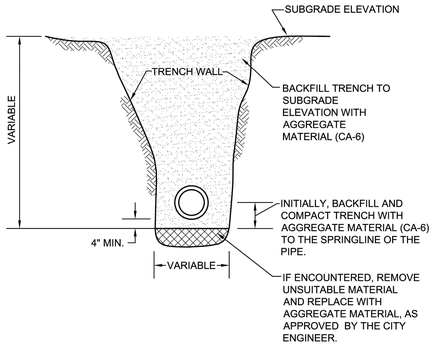

NOTES:

1. TRENCH BACKFILL MATERIAL SHALL BE COMPACTED IN ACCORDANCE WITH SECTION 550.07 OF THE IDOT STANDARD SPECIFICATIONS FOR ROAD AND BRIDGE CONSTRUCTION.
2. THIS DETAIL SHALL BE USED WHEREVER THE TRENCH IS MADE IN THE PROPOSED ROADWAY SUBGRADE, AND WHEREVER THE INNER EDGE OF THE TRENCH IS CLOSER THAN 2' TO THE EDGE OF THE PROPOSED PAVEMENT, CURB AND GUTTER, AND SIDEWALK.

City of Naperville STANDARD DETAIL	STORM SEWER TRENCH SECTION IN PAVED AREAS	STORM 20
	REVISED: 01/01/2013 / SHEET 1 OF 1	290.20

TRENCH SECTION IN PAVED AREA DETAIL

Scale: NOT TO SCALE

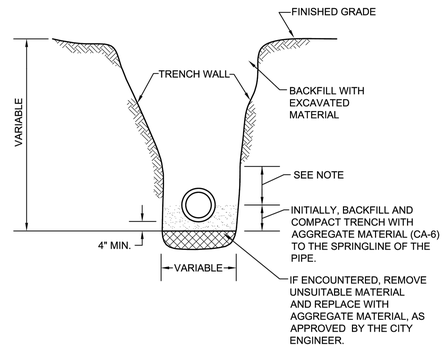

NOTE:

FOR PVC AND HDPE PIPE, BACKFILL WITH AGGREGATE MATERIAL (CA-6) TO 6" ABOVE THE TOP OF PIPE.

City of Naperville STANDARD DETAIL	STORM SEWER TRENCH SECTION IN NON-PAVED AREAS	STORM 21
	REVISED: 01/01/2013 / SHEET 1 OF 1	290.21

TRENCH SECTION IN NON-PAVED AREA DETAIL

Scale: NOT TO SCALE

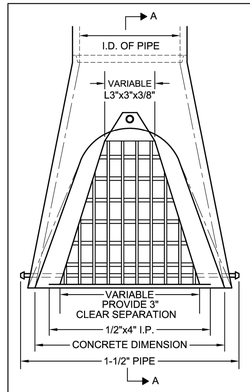

NOTES:

1. STRUCTURAL STEEL SHAPES AND PLATES SHALL BE IN ACCORDANCE WITH ARTICLE 710.04 OF THE STANDARD SPECIFICATIONS FOR ROAD AND BRIDGE CONSTRUCTION.
2. GALVANIZED STEEL PIPE SHALL BE IN ACCORDANCE WITH ARTICLE 710.33 (B) OF THE STANDARD SPECIFICATIONS.
3. BOLTS, NUTS AND WASHERS SHALL BE IN ACCORDANCE WITH ARTICLE 710.33 (G) OF THE STANDARD SPECIFICATIONS.
4. ALL FABRICATION SHALL BE COMPLETED AND ASSEMBLED BEFORE GALVANIZING.
5. THE CORED HOLES IN THE PRECAST CONCRETE FLARED END SECTIONS SHALL BE TO THE DIAMETERS NOTED. IF CONE-OUT ON THE OTHER END OF THE HOLE OCCURS, THE HOLE SHALL BE FILLED WITH GROUT TO CORRECT DIAMETER OF THE HOLE.
6. ALL FLARED END SECTIONS FOR PIPE GREATER THAN 12" IN DIAMETER SHALL BE PROVIDED WITH A GRATE.
7. GRATES SHALL BE CONSTRUCTED TO PROVIDE 8" VERT. X 3" HORZ. CLEAR SEPARATION BETWEEN BARS.

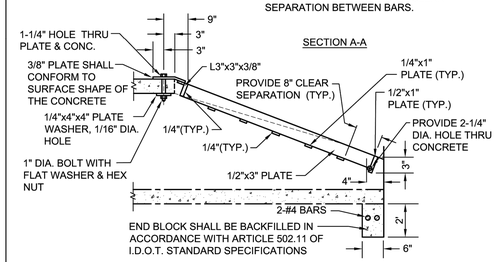

City of Naperville STANDARD DETAIL	GRATING FOR CONCRETE FLARED END SECTION	STORM 22
	REVISED: 01/01/2013 / SHEET 1 OF 1	290.22

FLARED END SECTION DETAIL

Scale: NOT TO SCALE

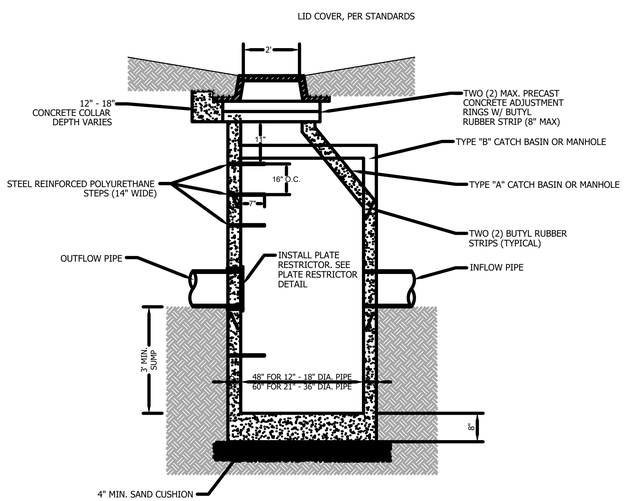

NOTES:

1. CATCH BASINS MUST CONFORM TO ASTM C-478.
2. CATCH BASIN SECTIONS TO BE TONGUE AND GROOVED.
3. NON-SHRINKGROUT OR CEMENT TO BE USED ON ALL PENETRATIONS INSIDE AND OUTSIDE OF STRUCTURE.
4. ALL PIPE PENETRATIONS TO BE CORED, RUBBER BOOTED AND INTERIOR GROUTED (NON-SHRINK) OR CEMENTED, ASTM C923 CONNECTORS IN COMBINED SEWER AREAS.

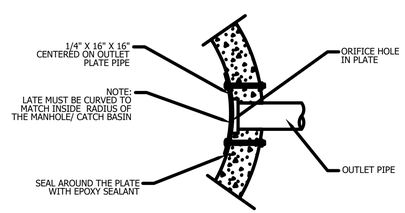

PLATE RESTRICTOR DETAIL: SECTION

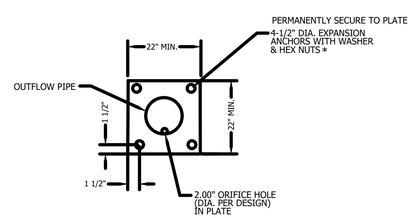

PLATE RESTRICTOR DETAIL: ELEVATION

* ANCHOR EMBEDMENT SHALL BE 3" MIN.

NOT TO SCALE

OUTLET STRUCTURE DETAIL

Scale: NOT TO SCALE

EXHIBIT C

2200 CABOT DRIVE
SUITE 325
LISLE, IL 60532
P: 630.598.0007
WWW.CAGECIVIL.COM

CAGE CIVIL ENGINEERING

FREDERICK W. THIETE
062-055840
LICENSED PROFESSIONAL ENGINEER OF ILLINOIS
EXP. 11/30/2025

REVISIONS

2 06/25/2025 CITY RESUBMITTAL
1 05/23/2025 CITY RESUBMITTAL

THIS DESIGN AND THESE DRAWINGS ARE THE PROPERTY OF CAGE ENGINEERING, INC. NO PART OF THIS WORK MAY BE REPRODUCED WITHOUT PRIOR WRITTEN PERMISSION FROM CAGE ENGINEERING, INC.

M/I HOMES OF CHICAGO, LLC
NORTHWOODS OF NAPERVILLE
1151 WARRENVILLE ROAD
NAPERVILLE, IL 60563

PROJ NO: 240255
ENG : DJB
DATE : 07/07/2025

SHEET TITLE
CONSTRUCTION DETAILS

SHEET NUMBER
C8.4
28 OF 32

NOTES:
1. THIS DRAWING IS PRELIMINARY LAYOUT ONLY. NOT FOR CONSTRUCTION. CONSTRUCTION DRAWINGS WILL BE FORWARDED UPON RECEIPT OF APPROVED SUBMITTALS.
2. SOME ITEMS NOT SHOWN FOR CLARITY.
3. ADEQUATE LIFTING POINTS TO BE PROVIDED.
4. CONTRACTOR TO FILL INLET HUB WITH GROUT AFTER INSTALLING FIELD PIPING.
5. ALL COMPRESSION COUPLINGS, EPC's & FCA's, TO BE RESTRAINED WITH A MINIMUM OF 2 CONTROL RODS WHEN REQUIRED.
6. LIFT STATION TO BE INSTALLED BY AN EXPERIENCED AND QUALIFIED CONTRACTOR.
7. ALL CONCRETE WORK IS THE RESPONSIBILITY OF THE CONTRACTOR.
8. CONTRACTOR AND OR ENGINEER TO VERIFY ALL DIMENSIONS, ELEVATIONS, PIPING LAYOUT, AND ORIENTATION OF INLET (S), DISCHARGE AND CONDUIT (S).
9. ELECTRICAL COMPONENTS IN THE WET WELL SHALL BE RATED FOR CLASS I, DIV. I, GROUP C & D LOCATIONS.
10. CONDUITS ARE AS FOLLOWS: (1) 2" FOR EACH PUMP POWER/SENSOR CORD, (1) 2" FOR LEVEL SWITCHES, (1) 2" SPARE) & (1) 1" FOR VALVE VAULT SUMP PUMP POWER.
11. CONTRACTOR TO ORDER CONTROL AND POWER CORDS OF SUFFICIENT LENGTH TO REACH CONTROL PANEL FROM POINT OF ORIGIN ON PUMPS **WITHOUT SPLICING**.

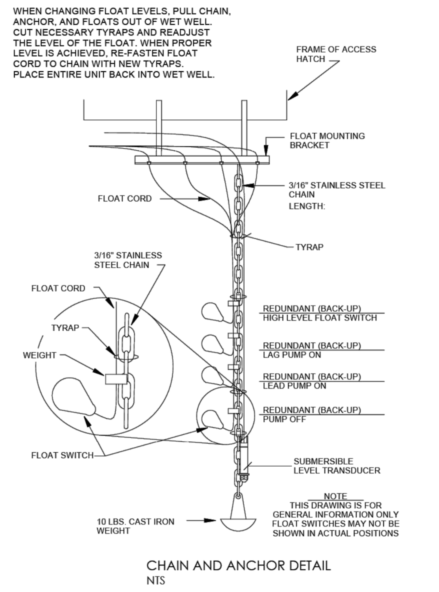

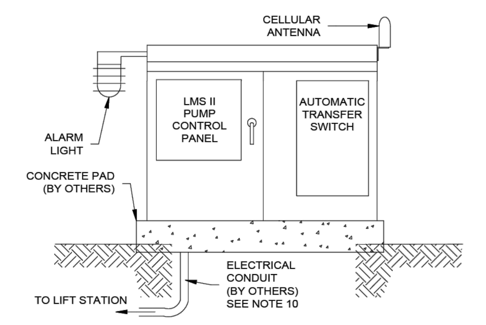

NEMA 3R STAINLESS STEEL TRAFFIC BOX STYLE CONTROL ENCLOSURE

ITEM NO.	PART NUMBER	DESCRIPTION	QTY.
1	FIBERGLASS WET WELL & VALVE VAULT	6'-0" DIA. x 18'-0" DEEP	1
2	LIFT STATION COVER	1/4" THK. ALUM. PLT.	1
3	R-APD300-30x51	DUPLEX ALUMINUM DROP-IN ACCESS HATCH, 300 PSF LOADING, STAINLESS STEEL HARDWARE	1
4	DUPLEX SAFETY GRATE	DUAL LEAF, 300 PSF LOADING	1
5	ARX100 UGS	FOR 2" GUIDE RAILS	2
6	2" GUIDE RAIL	SCHED. 40 STAINLESS STEEL PIPE	8
7	ARX100 IGS	2" GUIDE RAILS	2
8	ARX100 BASE ELBOW	4" DISCHARGE	2
9	ARX100 SEALING FLANGE	4" DISCHARGE	2
10	KSB-ARXF100-180/4.8	4" SUBMERSIBLE SEWAGE PUMP, 4.8 HP, F-max IMPLELLER	2
11	4" S.R. ELBOW	D.I. FITTING	5
12	4" RISER	ANSI CLASS 125 FLANGES, DIP	2
13	FLOAT MOUNTING BRACKET	STAINLESS STEEL	1
14	FLOAT: OFF LEVEL	METROPOLITAN SUBMERSIBLE LEVEL SWITCH	1
15	FLOAT: ONE PUMP ON	METROPOLITAN SUBMERSIBLE LEVEL SWITCH	1
16	FLOAT: TWO PUMPS ON	METROPOLITAN SUBMERSIBLE LEVEL SWITCH	1
17	FLOAT: ALARM LEVEL	METROPOLITAN SUBMERSIBLE LEVEL SWITCH	1
18	SUBMERSIBLE LEVEL TRANSDUCER	XXXX	1
19	ANCHOR	10lbs CAST IRON, WITH STAINLESS STEEL CHAIN FOR LEVEL CONTROL MOUNTING	1
20	LINK SEAL SLEEVE FOR 4" DIP STATION DISCHARGE		1
21	4" SPOOL A	ANSI CLASS 125 FLANGE x UNI FLANGE, DIP	2
22	4" SPOOL B	CLASS 125 FLANGE, DIP	2
23	4" CROSS	D.I. FITTING	1
24	4" PLUG VALVE	VALVE, PLUG, 4", 2 WAY, PN PEC, 4,1,C1, NBR-CR-NUT	3
25	4" WAFER CHECK VALVE	w/ LEVER & SPRING	2
26	4" FLANGE x PE SPOOL	ANSI CLASS 125 FLANGE, DIP	1
27	4" QUICK CONNECT COUPLING FLANGED	MALE END	1
28	LINK SEAL SLEEVE FOR 4" DIP		2
29	R-APS300-36x30	SIMPLEX ALUMINUM DROP-IN ACCESS HATCH, 300 PSF LOADING, STANLESS STEEL HARWARE	1
30	SIMPLEX SAFETY GRATE		1
31	LADDER	ALUMINUM LADDER	1
32	SH30i	1/3 HP, 115 V SUMP PUMP	1
33	1.5" COUPLING 72" ID		1
34	1.50" CHECK VALVE	FOR SUMP PUMP	1
35	2" COUPLING 72" ID	CONDUIT COUPLINGS	4
36	3" COUPLING 72" ID	FOR VENT DISCHARGE	1
37	1" COUPLING 72" ID	CONDUIT COUPLINGS	2
38	3" SCHED. 80 PVC VENT PIPING w/ BUG SCREENING	BY OTHERS	1
39	INLET HUB FOR 8" PVC PIPING	SUPPLIED LOOSE, CONTRACTOR TO LOCATE & INSTALL IN FIELD	1
40	2" CONDUIT	BY OTHERS	4
41	1" CONDUIT	BY OTHERS	2
42	CONCRETE FILLET - BY OTHERS	SLOPE 1:1	1

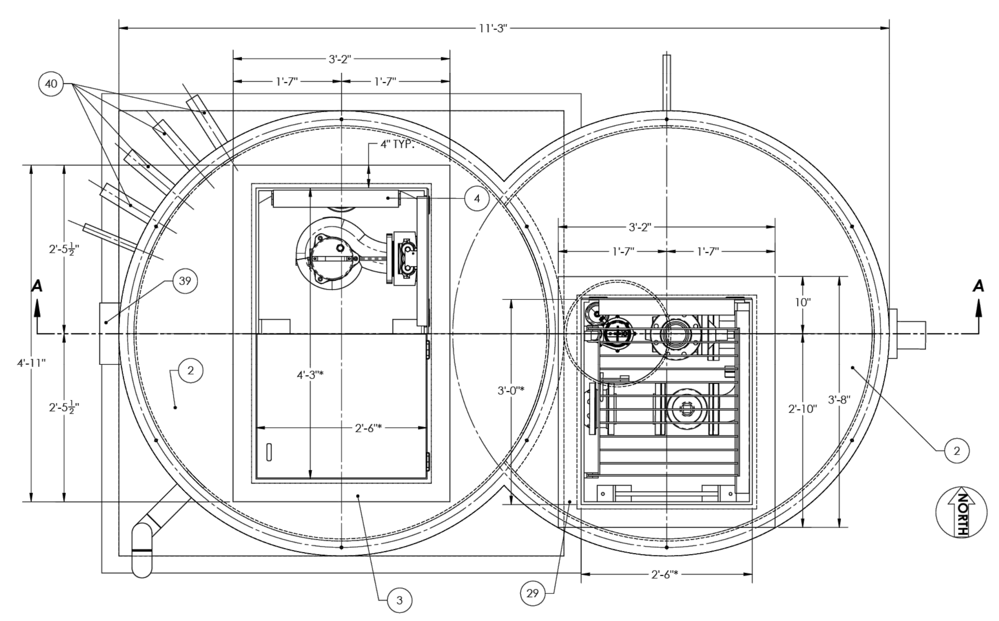

THE INFORMATION CONTAINED IN THIS DRAWING IS THE SOLE PROPERTY OF METROPOLITAN INDUSTRIES, INC.
ANY REPRODUCTION IN PART OR AS A WHOLE WITHOUT THE WRITTEN PERMISSION OF METROPOLITAN INDUSTRIES, INC. IS PROHIBITED.
© Metropolitan Industries, Inc. 2025

DATE	BY	REVISION	DATE	BY	REVISION					
05/20/2025	PLL	ELEVATIONS				SCALE: 1:12 DRN. BY: F.U. DATE: 1/21/2025 APP. BY:	METROPOLITAN INDUSTRIES, INC. 37 FORESTWOOD DR. ROMEOVILLE, ILLINOIS 60446 (815)886-9200 FAX (815)886-4573 PUMPS - CONTROLS - SYSTEMS	TITLE: DUPLEX METRORAIL ARX100 FIBERGLASS LIFT STATION	PROJECT: SANITARY LIFT STAION NORTHWOODS OF NAPERVILLE NAPERVILLE, ILLINOIS	SHEET 1 OF 2 25SW002F201-25N(B)

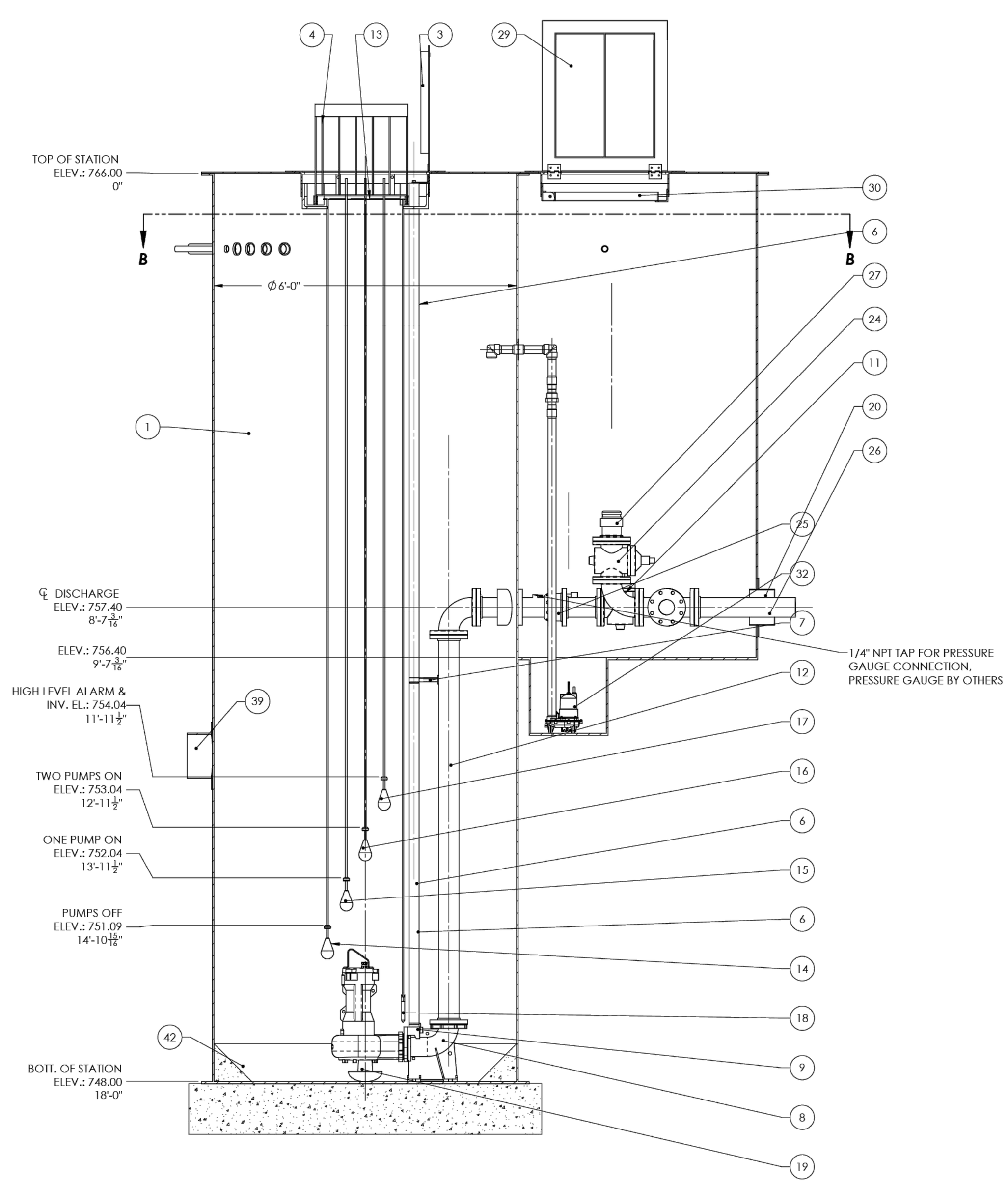

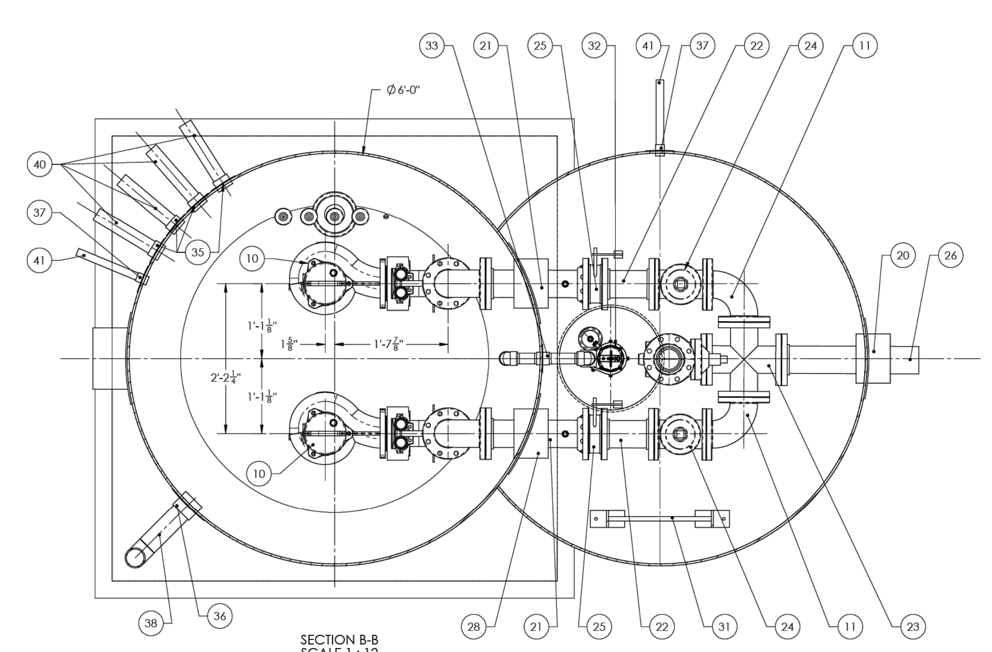

THE INFORMATION CONTAINED IN THIS DRAWING IS THE SOLE PROPERTY OF METROPOLITAN INDUSTRIES, INC.
ANY REPRODUCTION IN PART OR AS A WHOLE WITHOUT THE WRITTEN PERMISSION OF METROPOLITAN INDUSTRIES, INC. IS PROHIBITED.
© Metropolitan Industries, Inc. 2025

DATE	BY	REVISION	DATE	BY	REVISION					
05/20/2025	PLL	ELEVATIONS				SCALE: 1:16 DRN. BY: F.U. DATE: 1/21/2025 APP. BY:	METROPOLITAN INDUSTRIES, INC. 37 FORESTWOOD DR. ROMEOVILLE, ILLINOIS 60446 (815)886-9200 FAX (815)886-4573 PUMPS - CONTROLS - SYSTEMS	TITLE: DUPLEX METRORAIL ARX100 FIBERGLASS LIFT STATION	PROJECT: SANITARY LIFT STAION NORTHWOODS OF NAPERVILLE NAPERVILLE, ILLINOIS	SHEET 2 OF 2 25SW002F201-25N(B)

LIFT STATION DETAIL
Scale: NOT TO SCALE

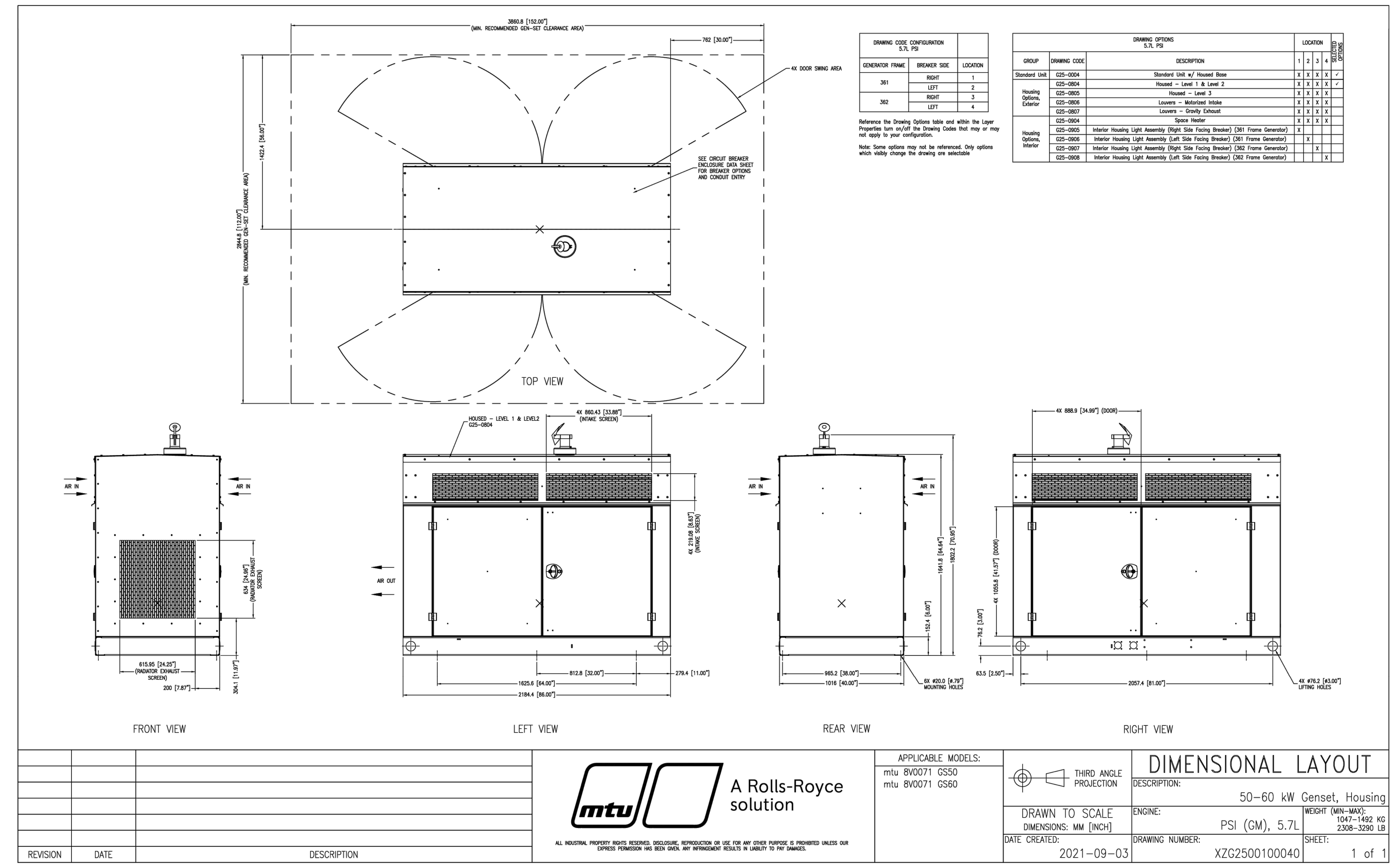

LIFT STATION GENERATOR DETAIL
Scale: NOT TO SCALE

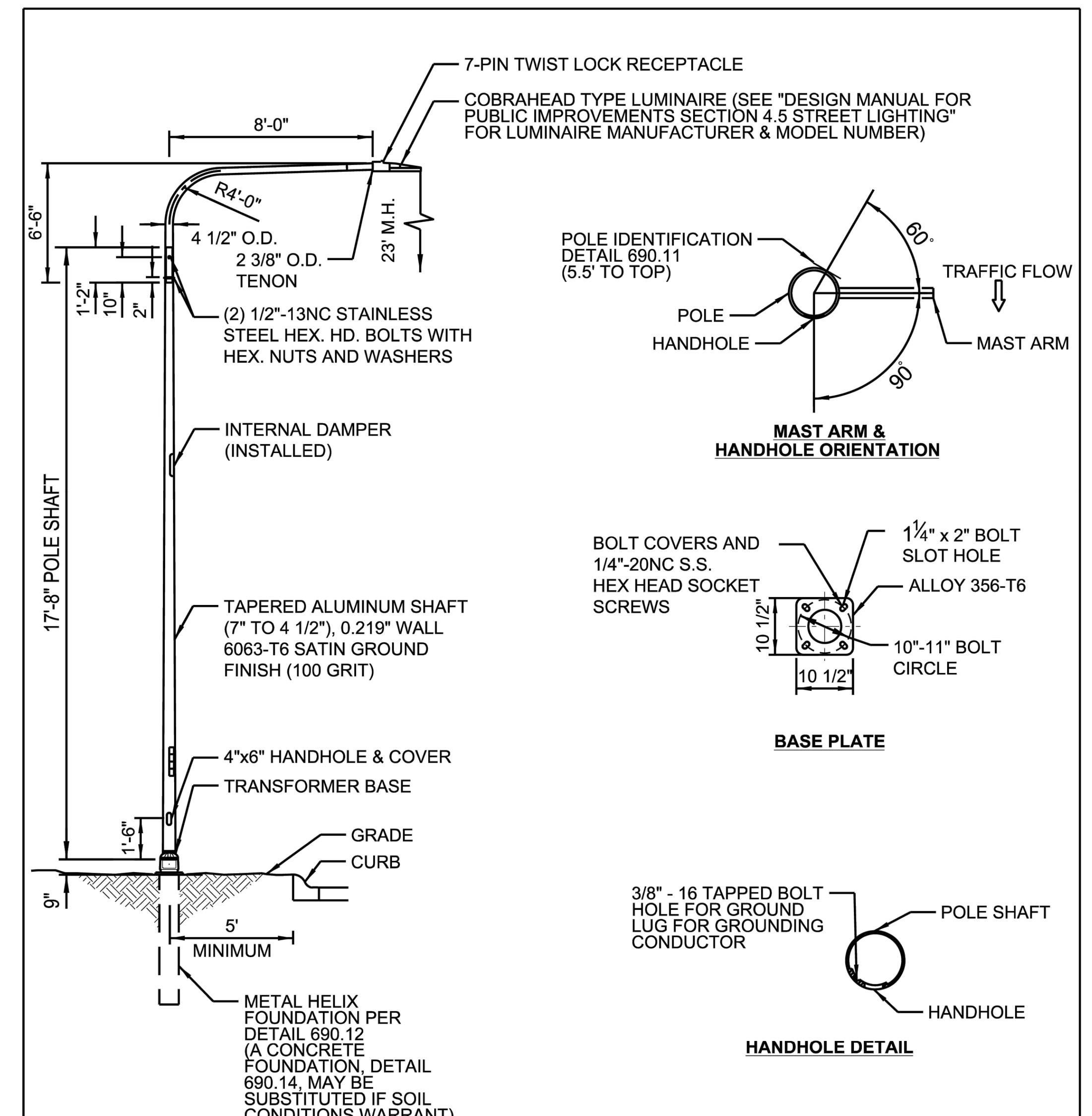

NOTES:
1. COMPLETE ASSEMBLY POWDER COATED TEXTURED DARK BRONZE, HAPCO, VALMONT OR APPROVED EQUAL.
2. POLE IS UL CLASSIFIED WITH UL LABEL AND HANDHOLE COVER GASKET COMPLYING WITH UL 1572.
3. POLE DESIGN MEETS LATEST AASHTO SPECIFICATION FOR 90 MPH WIND WITH A LUMINAIRE HAVING A MAXIMUM EPA OF 1.6 SQ. FT. AND WEIGHING 75 LBS.

City of Naperville STANDARD DETAIL	DAVIT ARM STREET LIGHT DETAIL - 23 FOOT	LIGHTING 1
	EFFECTIVE: 9/1/2023 — SHEET 1 OF 1	690.01

STREET LIGHT DETAIL
Scale: NOT TO SCALE

2200 CABOT DRIVE
SUITE 325
LISLE, IL 60532
P: 630.598.0007
WWW.CAGECIVIL.COM
CAGE CIVIL ENGINEERING

FREDERICK W. THAETE 062-055840 LICENSED PROFESSIONAL ENGINEER
EXP. 11/30/2025

REVISIONS
- 06/25/2025 CITY RESUBMITTAL
- 05/23/2025 CITY RESUBMITTAL

THIS DESIGN AND THESE DRAWINGS ARE THE PROPERTY OF CAGE ENGINEERING, INC. NO PART OF THIS WORK MAY BE REPRODUCED WITHOUT PRIOR WRITTEN PERMISSION FROM CAGE ENGINEERING, INC.

M/I HOMES OF CHICAGO, LLC
NORTHWOODS OF NAPERVILLE
1151 WARRENVILLE ROAD
NAPERVILLE, IL 60563

PROJ NO: 240255
ENG: DJB
DATE: 07/07/2025

SHEET TITLE
CONSTRUCTION DETAILS

SHEET NUMBER
C8.5

EXHIBIT C

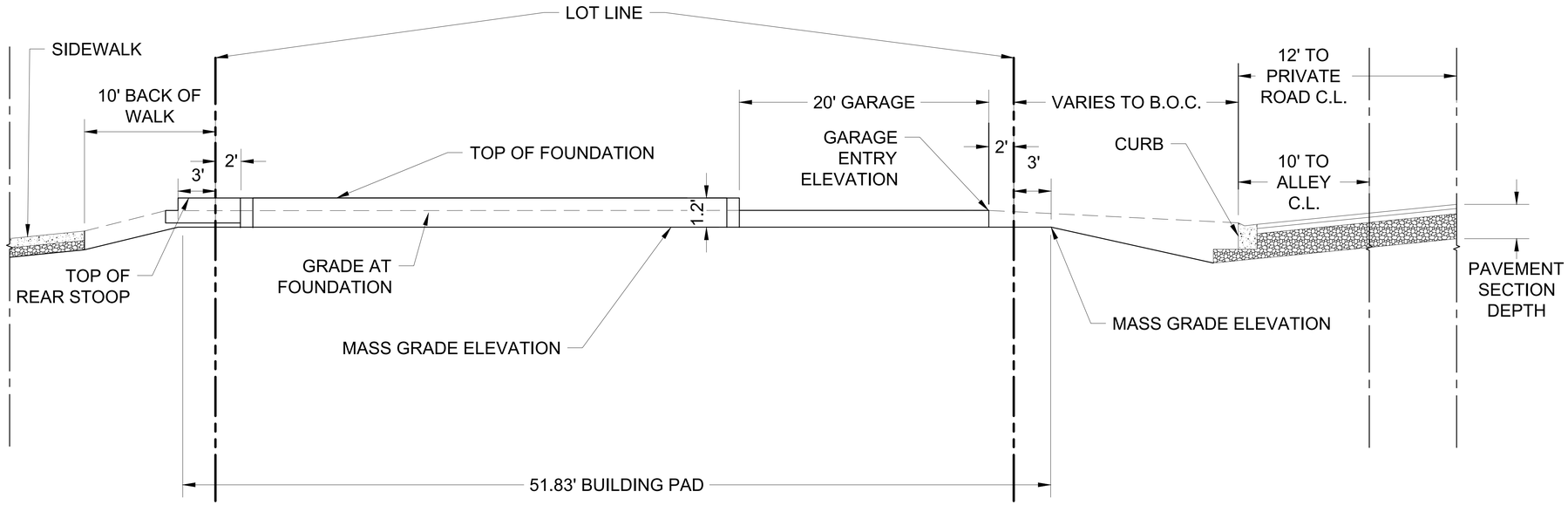

URBAN TOWNHOME GRADING PROFILE

SCALE: 1" = 10'(H); 1" = 5'(V)

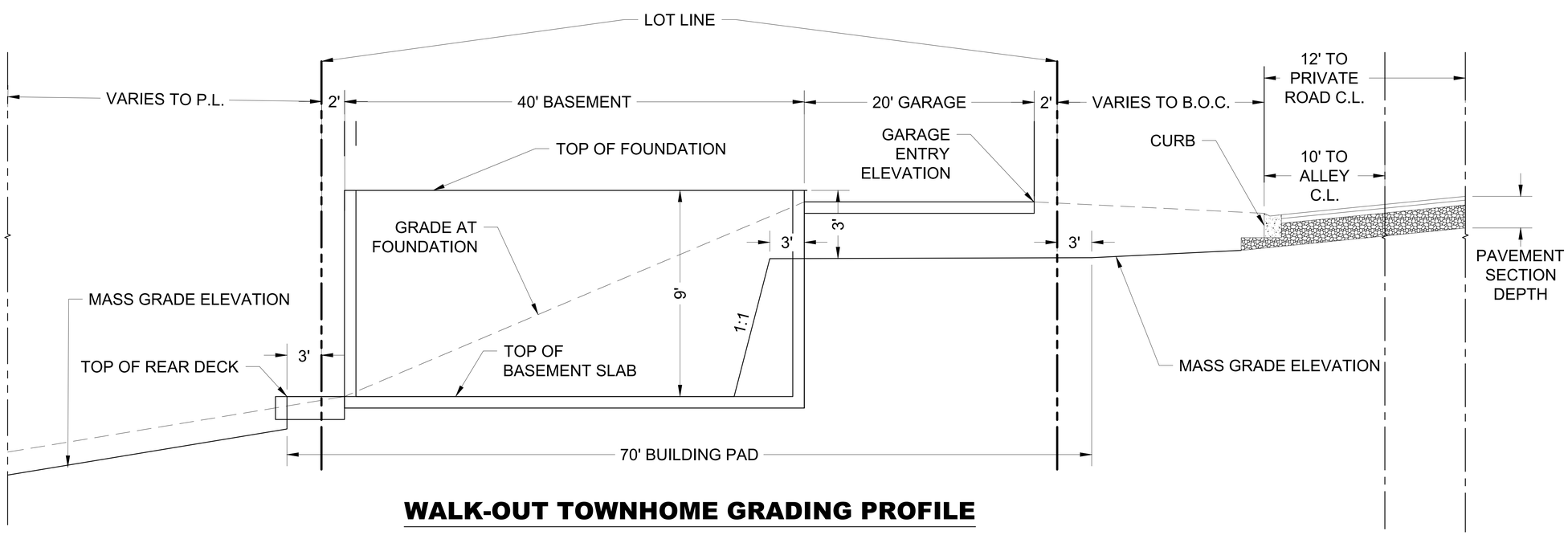

WALK-OUT TOWNHOME GRADING PROFILE

SCALE: 1" = 10'(H); 1" = 5'(V)

2200 CABOT DRIVE
SUITE 325
LISLE, IL 60532
P: 630.396.0007
WWW.CAGECIVIL.COM

CAGE CIVIL ENGINEERING

FREDERICK W. THAETE
062-055840
LICENSED PROFESSIONAL ENGINEER OF ILLINOIS
EXP. 11/30/2025

REVISIONS

1 08/25/2025 CITY RESUBMITTAL
2 05/23/2025 CITY RESUBMITTAL

THIS DESIGN AND THESE DRAWINGS ARE THE PROPERTY OF CAGE ENGINEERING, INC. NO PART OF THIS WORK MAY BE REPRODUCED WITHOUT PRIOR WRITTEN PERMISSION FROM CAGE ENGINEERING, INC.

M/I HOMES OF CHICAGO, LLC
NORTHWOODS OF NAPERVILLE
1151 WARRENVILLE ROAD
NAPERVILLE, IL 60563

PROJ NO.: 240255
ENG.: DJB
DATE: 07/07/2025

SHEET TITLE
CONSTRUCTION DETAILS

SHEET NUMBER
C8.6
29 OF 32

EXHIBIT C

Exhibit D
PUBLIC IMPROVEMENTS

1. Primary electrical feeds running through the Subject Property;
2. Water main running through the Subject Property;
3. Water services from mainline connection to curb stop and b-box (including curb stop and b-box) on the Subject Property; and
4. Transformers installed per approved design by the City of Naperville Department of Public Utility-Electric.

Exhibit E
PRIVATE IMPROVEMENTS

1. All roads, driveways, parking areas, including associated curb and gutter, streetlighting, sidewalks/carriage walks, and trees adjacent to Private Roadway on the Subject Property;
2. Lift Station with associated force main, sanitary gravity mains and service lines upstream of the lift station on the Subject Property;
3. Water services from curb stop into each building on the Subject Property;
4. Electric service lines (secondary service lines to the meters) on the Subject Property;
5. Storm sewer line and structures on the Subject Property; and
6. Storm Water Management Facilities on the Subject Property as described in Section 12 (including the existing storm water management basin and the Wetland Bottom BMP).

CAGE
CIVIL ENGINEERING

NORTHWOODS OF NAPERVILLE

1151 WARRENVILLE ROAD
NAPERVILLE, ILLINOIS

STORMWATER MANAGEMENT REPORT

APRIL 4, 2025

REV. MAY 22, 2025
REV. JUNE 25,2025
REV. JULY 7, 2025

EXHIBIT F

2200 Cabot Drive, Suite 325
Lisle, IL 60532
www.cagecivil.com
Ph: 630.598.0007

TABLE OF CONTENTS

SITE LOCATION MAP

TABBED SUBMITTAL FLOWCHARTS

DUPAGE COUNTY STORMWATER MANAGEMENT CERTIFICATION

TAB 1 – PROJECT OVERVIEW (NARRATIVE)

TAB 2 – SITE RUNOFF (NOT APPLICABLE)

TAB 3 – FLOOD PLAIN (NOT APPLICABLE)

TAB 4 – WETLAND AND WETLAND BUFFER

TAB 5 – RIPARIAN BUFFER (NOT APPLICABLE)

TAB 6 – POST CONSTRUCTION BEST MANAGEMENT PRACTICES (PCBMPs)

TAB 7 – SOIL EROSION AND SEDIMENT CONTROL

TAB 8 – MAPS

TAB 9 – MAINTENANCE & MONITORING

TAB 10 – SECURITY

TAB 11 – VARIANCE (NOT APPLICABLE)

APPENDIX

TAB 9 – MAINTENANCE AND MONITORING

EXHIBIT F

TAB 9 – MAINTENANCE AND MONITORING

Upon completion of construction activities, the Owner of the development will be responsible for the ongoing maintenance of monitoring of the implemented stormwater management infrastructure to ensure functionality. Ongoing maintenance shall be completed in accordance with the following activity schedule:

1. General

   Regular inspections and routine maintenance of general areas shall be performed on a monthly or as-needed basis. Specific items of concern include:

   - Litter and debris shall be controlled.
   - Landscape areas shall be maintained with regular mowing and restored with appropriate seeding/vegetation as necessary if damaged by grazing, motorbikes, or other vehicles, or otherwise not establishing properly.
   - Landscape areas shall be checked for invasive vegetation; if found, such species shall be removed.
   - Accumulated sediment shall be disposed of properly, along with any waste generated during maintenance operations.
   - Vehicular use areas shall be swept, vacuumed, and/or washed on a regular basis.
   - Surface of permeable pavement shall be cleaned with low-pressure power washer.

2. Wetland Bottom PCBMP Facilities

   All components of the stormwater management facilities shall be checked monthly between March and November and maintained as necessary to ensure proper performance. It is critical that all inflows to and outflows from the Wetland Bottom PCBMP facility are clean and performing as designed. In addition, the design volume of the facility shall also be maintained. Inspections for the following specific items should be conducted monthly between March and November:

   - Inspect restrictor and remove debris if clogged or discharge is being reduced.
   - Remove accumulated sediment at outlet.
   - Inspect for any ice damage to outlet control structure pipes and repair if necessary.
   - Remove obstructions blocking emergency overflow spillway.
   - Inspect the facility to ensure that the constructed volume is maintained. No sediment, topsoil, or other dumping into the facility shall be allowed. Specific locations in the stormwater system, designed to accumulate sediment, shall be dredged as necessary to prevent sediment from reaching the invert of any gravity outlet pipe.

3. Stormwater Collection System

   The Owner shall perform monthly inspections of all components of the stormwater collection system. The monthly inspection shall occur between March and November, and include the following specific areas of concern:

   - Remove accumulated leaves and other debris from storm inlets/manhole grates.
   - Re-set covers/lids on an as-needed basis.
   - Remove accumulated sediment from catch basin bottoms when 50% of sump is filled.
   - Visually inspect pipes by removing manhole lids and make repairs as necessary.
   - Storm sewers shall be checked for siltation deposits at inlets, outlets, and within the conduit. If such deposits are found, sewers shall be cleaned out as necessary to remove.

NATIVE LANDSCAPED AREAS:

Monitoring:

The Owner shall notify the City of Naperville upon completion of plantings. The Owner's Environmental Specialist shall inspect the plantings and provide the City of Naperville with a copy of the planting locations, species, and quantities for verification by the City of Naperville.

The Owner's Environmental Specialist shall inspect the plantings at least twice per year during the three-year term of the Establishment and Maintenance Cash Bond or Letter of Credit, to determine compliance with the minimum annual performance criteria (See 1.5C Guarantees). A monitoring report will be provided to the City of Naperville by January 31st following each inspection.

Maintenance:

First Season

With the exception of the emergent area, native seeding areas should be mowed to a height of 6" to control annual nonnative and invasive species early in the growing season. Mowing, including weed whipping, should be conducted during prior to weed seed production. Mowing height and timing may need to be adjusted per target species. Small quantities of undesirable plant species, shall be controlled by hand pulling prior to the development and maturity of the plant. Hand removal shall include the removal of all above-ground and below-ground stems, roots and flower masses prior to development of seeds. Herbicide should be applied as necessary by a trained and licensed operator that is competent in the identification of native and nonnative herbaceous plants. Debris and litter shall be removed from the native areas and storm structures shall be inspected and maintained as necessary. Temporary Vegetative Cover/Permanent Soil Stabilization must meet NPDES standards with minimum 10% native vegetation cover.

Second Season

Control of undesirable plant species during the second growing season shall consist primarily of precise herbicide application. Mowing and weed whipping shall be conducted as needed during the early growing season and as needed to a height of 6 to 8 inches to prevent annual weeds from producing seed. Debris and litter shall be removed from the native areas and storm structures shall be inspected and maintained as necessary. There shall be no unvegetated areas greater than $1m^2$. A minimum native vegetation cover of 25% shall be established with none of the three most dominant species being non-native or invasive.

Third Year:

Seasonal mowing and herbicide will continue as above but should be reduced over time. Debris and litter shall be removed from the native areas and storm structures shall be inspected and maintained as necessary. At the completion of the third growing season (dependent on fuel availability; dominance of graminoid species; and favorable weather conditions), fire may be introduced to the planted areas as a management tool. There shall be no unvegetated areas greater than $1m^2$. A minimum native vegetation

cover of 75% shall be established with none of the three most dominant species being non-native or invasive.

State and local permits shall be required prior to controlled burning. Burning shall be conducted by trained professionals experienced in managing smoke in urban environments. Prior to a controlled burn, surrounding property owners as well as local fire and police departments shall be notified. A burn plan detailing preferred wind direction and speed, location of fire breaks, and necessary personnel and equipment shall be prepared and utilized in planning and burn implementation.

The initial burn shall be dependent on fuel availability which is directly related to the quantity and quality of grasses contained within the plant matrix. Timing of the burn shall be determined based on results of the annual monitoring indicating species composition of the management area and other analysis of management goals. Generally, burns shall be scheduled from spring to fall on a rotational basis. Burn frequency shall also be dependent on the species composition within the management area. Generally, a new prairie restoration area shall be burned annually for two years after the second or third growing season after planting and then every 2-3 years thereafter, burning 50-75% of the area.

Long Term Wetland and Prairie Management/Maintenance

A final compliance report and Long-Term Operation and Maintenance Plan shall be submitted by the Developer/Owner's Environmental Specialist no less than 60 days prior to the expiration of any landscape Cash Bond or Letter of Credit posted for the native areas. Final acceptance and release shall be determined by the City of Naperville upon inspection of the site to verify compliance.

The Long –Term Operation and Maintenance Plan shall be written to include guidelines and schedules for burning, mowing, application of herbicide, debris/litter removal and inspection schedule for storm structures and sediment removal.

Note: Please see Final Landscape Plans for additional details regarding maintenance and monitoring.

Final Landscape Plan

NORTHWOODS OF NAPERVILLE

Naperville, Illinois

July 07, 2025

CONSULTANTS:

LANDSCAPE ARCHITECT:

GARY R. WEBER ASSOCIATES, INC
402 W. LIBERTY DRIVE
WHEATON, ILLINOIS 60187

CIVIL ENGINEER:

CAGE
2200 CABOT DR., SUITE 325
LISLE, IL 60532

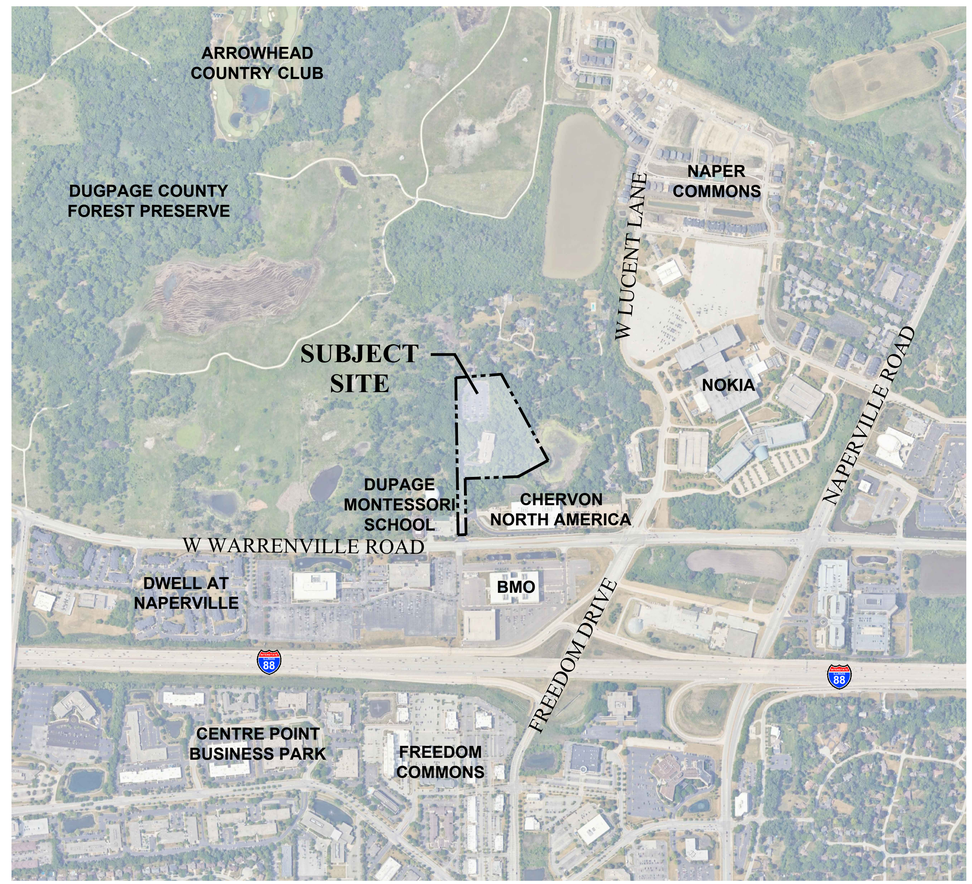

LOCATION MAP

SCALE: 1"=600'

INDEX OF SHEETS

SHEET NO.	DESCRIPTION
0	COVER SHEET
1	OVERALL LANDSCAPE PLAN
2	LANDSCAPE PLAN
3	LANDSCAPE PLAN
4	LANDSCAPE PLAN
5	TYPICAL FOUNDATION LANDSCAPE PLAN
6	TYPICAL FOUNDATION LANDSCAPE PLAN
7	TYPICAL FOUNDATION LANDSCAPE PLAN
8	OVERALL TREE PRESERVATION PLAN
9	TREE PRESERVATION PLAN
10	TREE PRESERVATION PLAN
11	TREE INVENTORY
12	TREE INVENTORY
13	TREE INVENTORY
14	LANDSCAPE SPECIFICATIONS

M/I HOMES

EXHIBIT G

L:\Projects\MI24251\Acad\MI24251_F02_00FLP.dwg

PLANT LIST

Key	Qty	Botanical/Common Name	Size	Remarks
		SHADE TREES		
AF	9	Acer x freemanii 'Jeffer's Red' AUTUMN BLAZE MAPLE	2 1/2" Cal.	PARKWAY
AF4	5	Acer x freemanii 'Jeffer's Red' AUTUMN BLAZE MAPLE	4" Cal.	
AS	9	Acer saccharum SUGAR MAPLE	2 1/2" Cal.	PARKWAY
CO	7	Celtis occidentalis COMMON HACKBERRY	2 1/2" Cal.	PARKWAY
CO4	3	Celtis occidentalis COMMON HACKBERRY	4" Cal.	NATIVE
GT	5	Gleditsia triacanthos var. inermis 'Skycole' SKYLINE HONEYLOCUST	2 1/2" Cal.	PARKWAY
LT	4	Liriodendron tulipifera TULIPTREE	4" Cal.	NATIVE
QC	6	Quercus 'Crimschmidt' CRIMSON SPIRE OAK	2 1/2" Cal.	PARKWAY
QB	8	Quercus bicolor SWAMP WHITE OAK	2 1/2" Cal.	PARKWAY
QM	4	Quercus macrocarpa BUR OAK	2 1/2" Cal.	
TA	2	Tilia americana 'Redmond' REDMOND AMERICAN LINDEN	2 1/2" Cal.	PARKWAY
TC	1	Tilia cordata 'Greenspire' GREENSPIRE LITTLELEAF LINDEN	2 1/2" Cal.	
UM	2	Ulmus 'Morton Glossy' TRIUMPH ELM	2 1/2" Cal.	
UM4	3	Ulmus 'Morton Glossy' TRIUMPH ELM	4" Cal.	
		ORNAMENTAL TREES		
AG	9	Amelanchier laevis ALLEGHENY SERVICEBERRY	6' Ht.	Clump Form
BN	3	Betula nigra RIVER BIRCH	6' Ht.	Multi-Stem
CC	3	Cercis canadensis EASTERN REDBUD	6' Ht.	Multi-Stem
CA	5	Cornus alternifolia PAGODA DOGWOOD	2" Cal.	Single Stem
		EVERGREEN TREES		
JV	10	Juniperus virginiana EASTERN RED CEDAR	12' Ht.	NATIVE
PA	5	Picea abies NORWAY SPRUCE	8' Ht.	
PG	4	Picea glauca var. densata BLACK HILLS SPRUCE	8' Ht.	
PG12	6	Picea glauca var. densata BLACK HILLS SPRUCE	12' Ht.	
TN	7	Thuja occidentalis 'Nigra' DARK GREEN ARBORVITAE	8' Ht.	
		DECIDUOUS SHRUBS		
CS	13	Cornus sericea REDOSIER DOGWOOD	36" Tall	5' O.C.
HQ	12	Hydrangea quercifolia OAKLEAF HYDRANGEA	30" Tall	3' O.C.
IV	10	Ilex verticillata WINTERBERRY	36" Tall	3' O.C.
RS	12	Rosa setigera PRAIRIE ROSE	30" Tall	4' O.C.
VD	18	Viburnum dentatum ARROWWOOD VIBURNUM	36" Tall	5' O.C.
		EVERGREEN SHRUBS		
BG	36	Buxus x 'Green Mountain' GREEN MOUNTAIN BOXWOOD	30" Wide	4' O.C.
JH	3	Juniperus horizontalis 'Hughes' HUGHES JUNIPER	30" Wide	4' O.C.
		ORNAMENTAL GRASS		
PV	11	Panicum virgatum 'Northwind' NORTHWIND SWITCH GRASS	#1	30" O.C.
		PERENNIALS		
HR	27	Hemerocallis 'Rosy Returns' ROSY RETURNS DAYLILY	#1	18" O.C.
SN	18	Salvia nemorosa 'East Friesland' EAST FRIESLAND SALVIA	#1	18" O.C.
		MISC. MATERIALS		
	66	SHREDDED HARDWOOD MULCH	C.Y.	
	4,444	SOD	S.Y.	

NATIVE LEGEND

Key	Qty.	Description
	0.21 AC.	WET MEADOW SEED MIX
	0.07 AC.	LOW PROFILE SEED MIX
	1.70 AC.	NATIVE WOODLAND SEED MIX
	13 EA.	NATIVE AREA SIGN

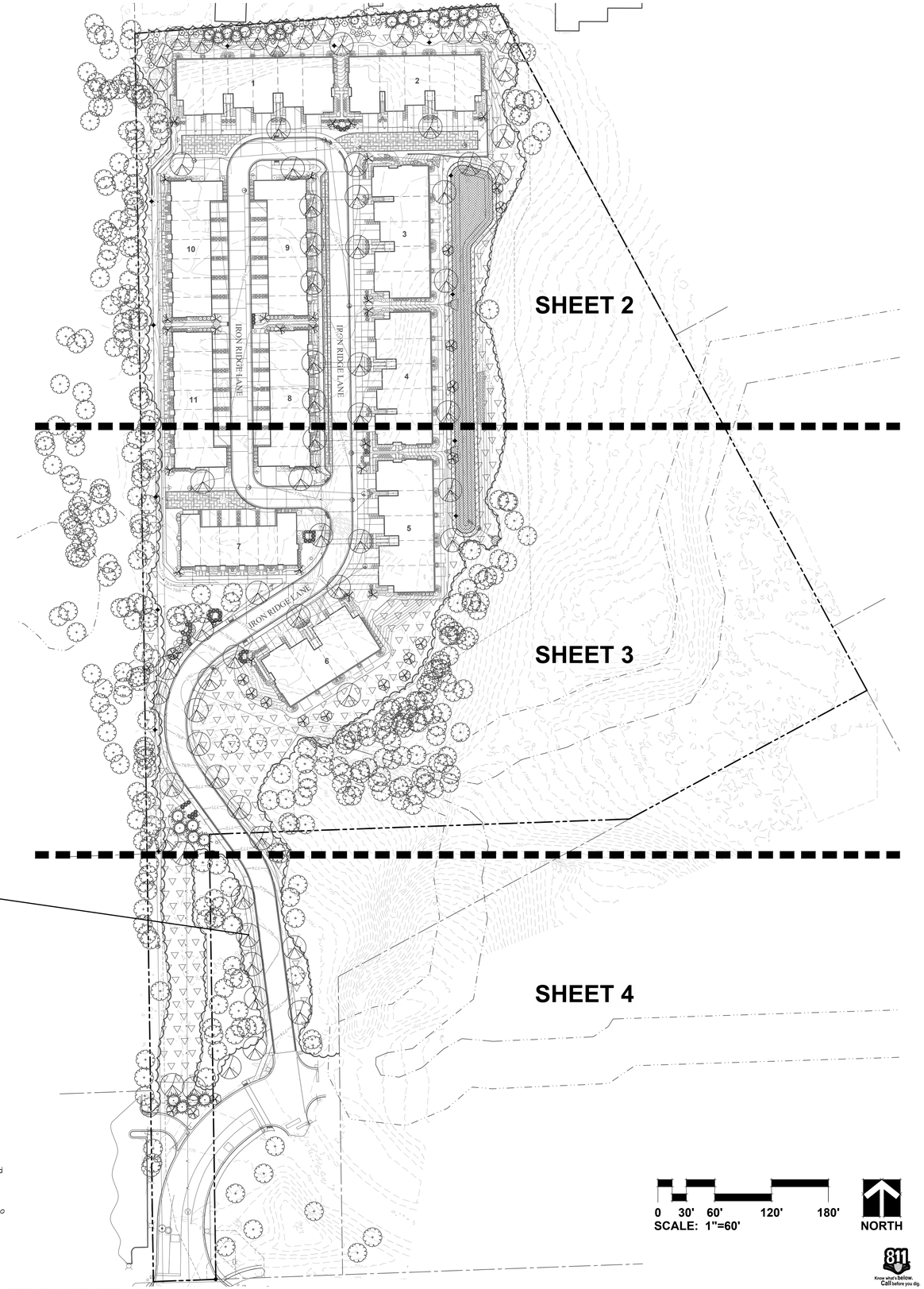

PARKWAY TREES: 1,618 L.F.
LANDSCAPING REQUIRED:
1 TREE PER 40 L.F.
41 TREES

LANDSCAPING PROVIDED:
37 PROPOSED TREES
5 PRESERVED TREES

TOTAL = 42 TREES

GENERAL LANDSCAPE NOTES

1. Contractor shall verify underground utility lines and is responsible for any damage.
2. Contractor shall verify all existing conditions in the field prior to construction and shall notify landscape architect of any variance.
3. Material quantities shown are for contractors convenience only. The Contractor must verify all material and supply sufficient materials to complete the job per plan.
4. The landscape architect reserves the right to inspect trees and shrubs either at place of growth or at site before planting, for compliance with requirements of variety, size and quality.
5. Work shall conform to American Standard for Nursery Stock, State of Illinois Horticultural Standards, and Local Municipal requirements.
6. Contractor shall secure and pay for all permits, fees, and inspections necessary for the proper execution of this work and comply with all codes applicable to this work.
7. See General Conditions and Specifications for landscape work for additional requirements.

DEPARTMENT OF PUBLIC UTILITIES: ELECTRICAL GENERAL NOTES

1. Clearance to transformer pad SHALL be 5' from all sides, 10' from front, and the area above must be completely clear of obstruction. No trees, shrubs, or other obstacles will be allowed within this area. Transformer pad SHALL maintain minimum clearance of 20' from egress points. Per DPUE specifications C10-2130 AND C30-0016.
2. Clearance to underground electric service conductors should be at least 2'. No trees, shrubs, or other obstacles will be allowed within this area.
3. At all times, the Customer shall be solely responsible for maintaining a suitable approach to the meter location, with no obstructions within four (4') feet of the front and two (2') feet of the sides of the Meter. Per NAPERVILLE SERVICE RULES AND POLICIES 22.2.F

0 30' 60' 120' 180'
SCALE: 1"=60'

NORTH

Know what's below. Call before you dig.

EXHIBIT G

GRWA
GARY R. WEBER ASSOCIATES, INC.
LAND PLANNING
ECOLOGICAL CONSULTING
LANDSCAPE ARCHITECTURE
402 W. LIBERTY DRIVE
WHEATON, ILLINOIS 60187
PHONE: 630-668-7197
www.grwainc.com

CLIENT
M/I HOMES
2135 CITY GATE LANE, SUITE 620
NAPERVILLE, IL 60563

ENGINEER
CAGE
2200 CABOT DRIVE
SUITE 325
LISLE, IL 60532

NORTHWOODS OF NAPERVILLE
NAPERVILLE, ILLINOIS

OVERALL LANDSCAPE PLAN

REVISIONS	
03	07.07.2025
02	06.20.2025
01	05.23.2025

DATE	04.04.2025
PROJECT NO.	MI24251
DRAWN	AJG/CLE
CHECKED	DHS
SHEET NO.	

NATIVE SEED MIXTURES

Temporary Cover Crop

Cover crops shall be installed in all planting areas containing dry mesic, mesic, and wet mesic soils to, stabilize soils, and combat weed pressure during the germination and establishement of the native seeding area.

Botanical Name	Common Name	lbs / AC
Cover Crop		
Avena sativa	Seed Oats	40.000

Wet Meadow Seed Mixture

Lower slopes of basin

Botanical Name	Common Name	lbs / AC
Grasses / Sedges		
Carex bebbii	Bebbs Oval Sedge	0.250
Carex bicknellii	Bicknells Sedge	0.125
Carex brevior	Plains Oval Sedge	0.250
Carex cristatella	Crested Oval Sedge	0.060
Carex molesta	Field Oval Sedge	0.250
Carex normalis	Speading Oval Sedge	0.015
Carex scorparia	Pointed Broom Sedge	0.190
Carex stipata	Common Fox Sedge	0.060
Carex vulpinoidea	Brown Fox Sedge	0.250
Elymus virginicus	Virginia Wild Rye	3.000
Glyceria striata	Fowl Manna Grass	0.130
Juncus dudleyi	Dudleys Rush	0.020
Juncus torreyi	Torreys Rush	0.031
Panicum virgatum	Switch Grass	3.000
Scirpus atrovirens	Dark Green Bulrush	0.060
Scirpus cyperinus	Wool Grass	0.030
	Total Grasses / Sedges	**7.721**
Wildflowers/Broadleaves		
Asclepias incarnata	Swamp Milkweed	0.125
Bidens cernua	Nodding Bur Marigold	0.190
Boltonia asteroids	False Aster	0.031
Eupatorium perfoliatum	Common Boneset	0.015
Euthamia grammifolia	Grassleaved Goldenrod	0.300
Helenium autumnale	Sneezeweed	0.063
Hibiscus laevis	Halberd-leaved Rose Mallow	0.380
Iris virginica shrevei	Blue Flag Iris	1.000
Lobelia siphilitica	Great Blue Lobelia	0.031
Mimulus ringens	Monkey Flower	0.031
Physostegia virginiana	Obedient Plant	0.031
Pycnanthemum virginianum	Common Mountain Mint	0.063
Solidago rigida	Stiff Goldenrod	0.125
Symphyotrichium novae-angliae	New England Aster	0.250
Vernonia fasciculata	Common Ironweed	0.380
Verbena hastata	Blue Vervain	0.380
Zizia aurea	Golden Alexanders	0.500
	Total Forbs	**3.895**
	Total Wet Meadow Seed Mix	**11.616**

Low Profile Prairie with Flowers Seed Mix

Upper basin slopes

Botanical Name	Common Name	lbs / AC
Grasses		
Bouteloua curtipendula	Side Oats Grama	8.000
Panicum virgatum	Prairie Switch Grass	0.125
Elymus canadenesis	Prairie Wild Rye	1.000
Schizachyrium scoparium	Little Bluestem	6.000
	Total Grasses	**15.125**
Wildflowers/Broadleaves		
Allium cernuum	Nodding Wild Onion	0.190
Amorpha canscens	Lead Plant	0.125
Asclepias tuberosa	Butterflyweed	0.500
Astragalus canadensis	Canada Milk Vetch	0.063
Coreopsis palmata	Prairie Coreopsis	0.025
Chamaecrista fasciculate	Partridge pea	0.188
Dalea purpurea	Purple Prairie Clover	0.560
Echinacea pallida	Pale Purple Coneflower	1.000
Echinacea purpurea	Purple Coneflower	0.500
Eryngium yuccifolium	Rattlesnake Master	0.125
Heliopsis helianthoides	False Sunflower	1.000
Lespedeza capitata	Round-Headed Bush Clover	0.125
Liatris aspera	Rough Blazing Star	0.250
Liatris pycnostachya	Prairie Blazing Star	0.188
Monarda fistulosa	Prairie Bergamot	0.063
Parthenium integrifolium	Wild Quinine	0.016
Penstemon digitalis	Foxglove Beard Tongue	0.125
Petalostemum candidum	White Prairie Clover	0.125
Petalostemum purpureum	Purple Prairie Clover	0.156
Potentilla arguta	Prairie Cinquefoil	0.031
Pycnanthemum tenuifolium	Slender Mountain Mint	0.031
Ratibida pinnata	Yellow Coneflower	0.125
Rudbeckia hirta	Black-Eyed Susan	0.500
Rudbeckia subtomentosa	Sweet Black-Eyed Susan	0.063
Rudbeckia triloba	Brown-eyed Susan	0.500
Solidago rigida	Stiff Goldenrod	0.250
Symphyotrichum laeve	Smooth Blue Aster	0.063
Symphyotrichum novae-angliae	New England Aster	0.250
Tradescantia ohiensis	Common Spiderwort	0.063
Verbena stricta	Hoary Vervain	0.125
Zizia aurea	Golden Alexanders	0.500
	Total Forbs	**7.825**
	Total Low Profile Prairie Seed Mix	**22.950**

PLANTING DETAILS

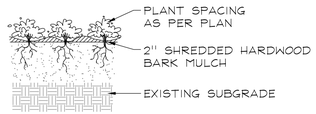

PERENNIALS AND GROUNDCOVERS
NOT TO SCALE

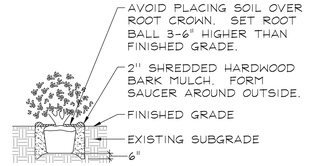

DECIDUOUS AND EVERGREEN SHRUBS
NOT TO SCALE

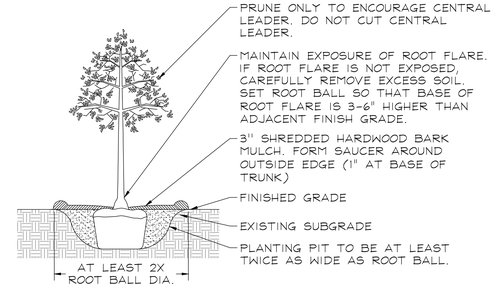

DECIDUOUS TREES
NOT TO SCALE

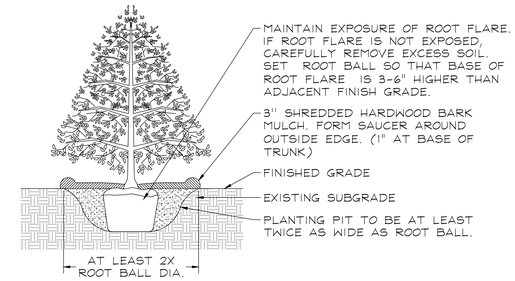

EVERGREEN TREES
NOT TO SCALE

Native Woodland Seed Mix

Botanical Name	Common Name	oz / AC
Grasses		
Bouteloua curtipendula	Side Oats Grama	48.0
Carex spp.	Prairie Sedge Species (Cardno Mix)	10.0
Elymus canadenesis	Canada Wild Rye	72.0
Koeleria macrantha	June Grass	2.0
Schizachyrium scoparium	Little Bluestem	72.0
	Total Grasses	**204.0 oz**

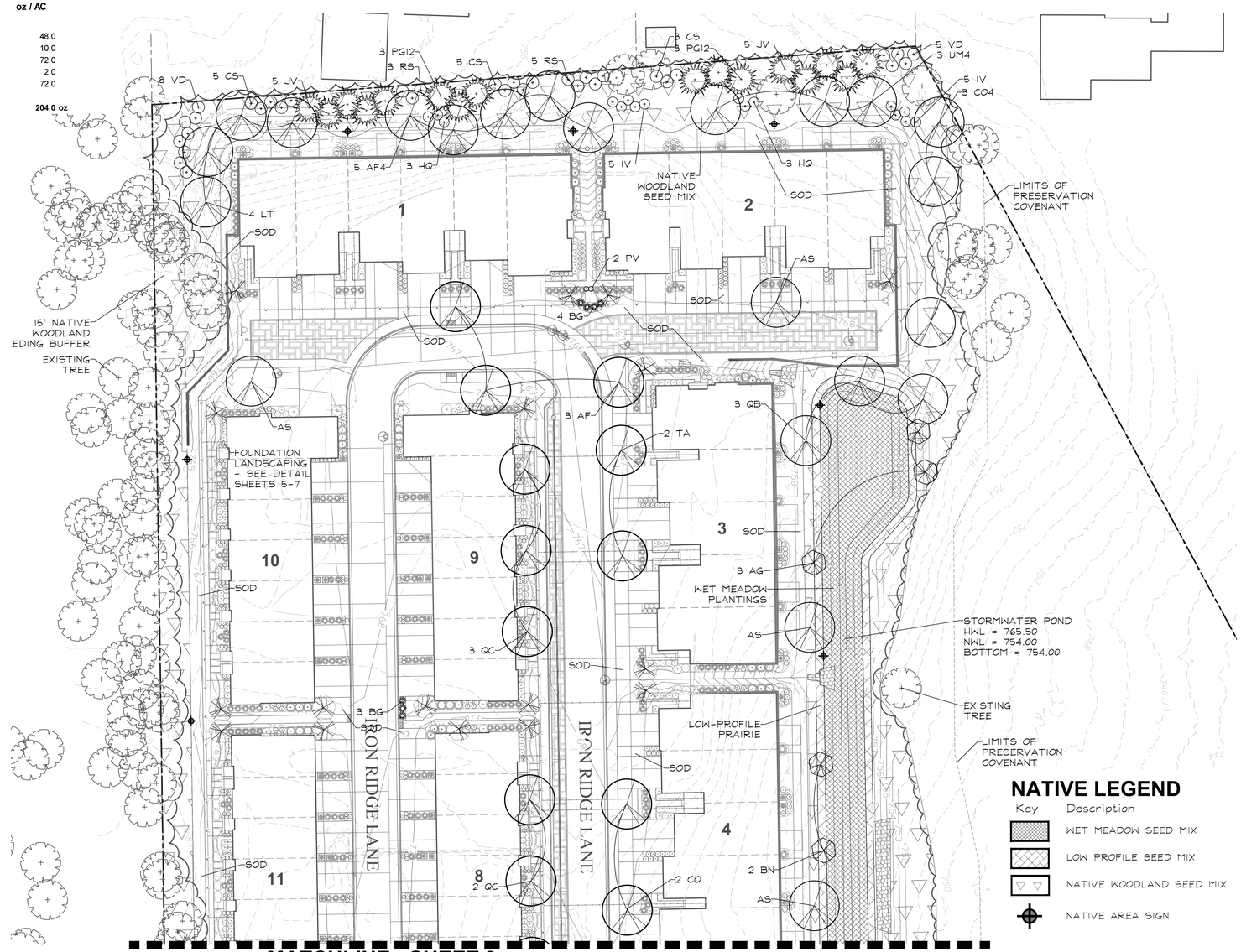

NATIVE LEGEND

Key	Description
	WET MEADOW SEED MIX
	LOW PROFILE SEED MIX
	NATIVE WOODLAND SEED MIX
	NATIVE AREA SIGN

GARY R. WEBER ASSOCIATES, INC.
LAND PLANNING
ECOLOGICAL CONSULTING
LANDSCAPE ARCHITECTURE
402 W. LIBERTY DRIVE
WHEATON, ILLINOIS 60187
PHONE: 630-668-7197
www.grwainc.com

CLIENT
M/I HOMES
2135 CITY GATE LANE, SUITE 620
NAPERVILLE, IL 60563

ENGINEER
CAGE
2200 CABOT DRIVE
SUITE 325
LISLE, IL 60532

NORTHWOODS OF NAPERVILLE
NAPERVILLE, ILLINOIS
LANDSCAPE PLAN

REVISIONS	
03	07.07.2025
02	06.20.2025
01	05.23.2025

DATE	04.04.2025
PROJECT NO.	MI24251
DRAWN	AJG/CLE
CHECKED	DHS
SHEET NO.	2 OF 14

Know what's below. Call before you dig.

EXHIBIT G

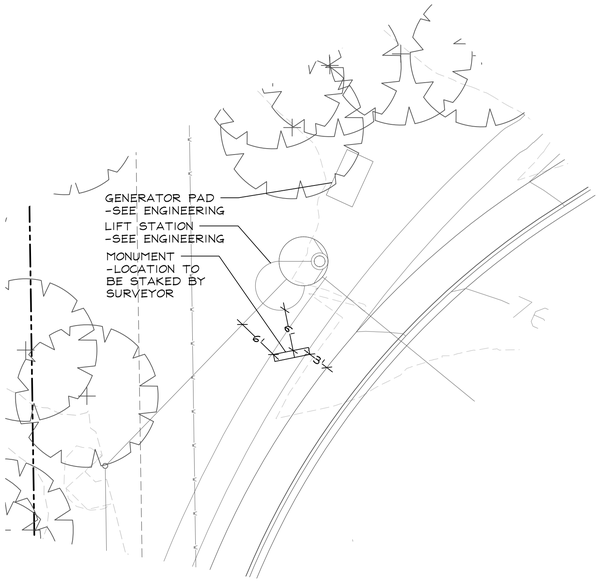

MONUMENT DETAIL SITE PLAN

0 5' 10' 20' 30'
SCALE: 1"=10'
NORTH

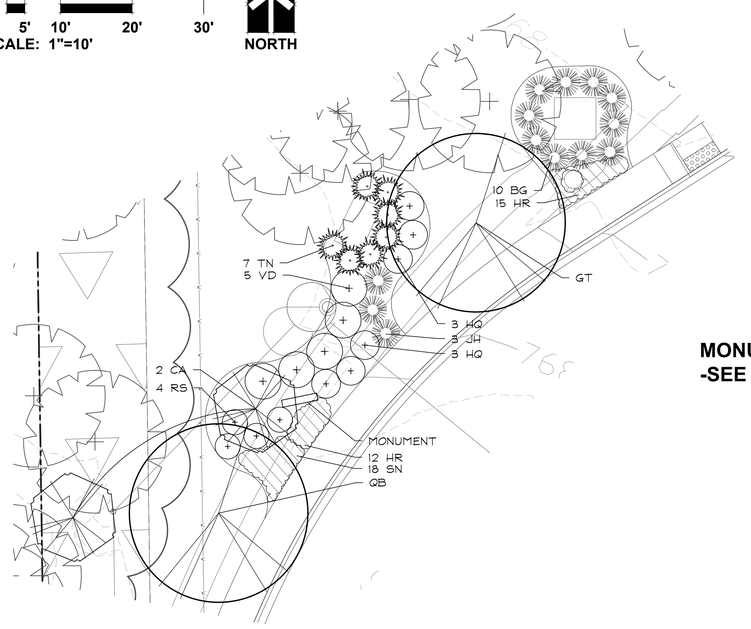

MONUMENT DETAIL LANDSCAPE PLAN

0 5' 10' 20' 30'
SCALE: 1"=10'
NORTH

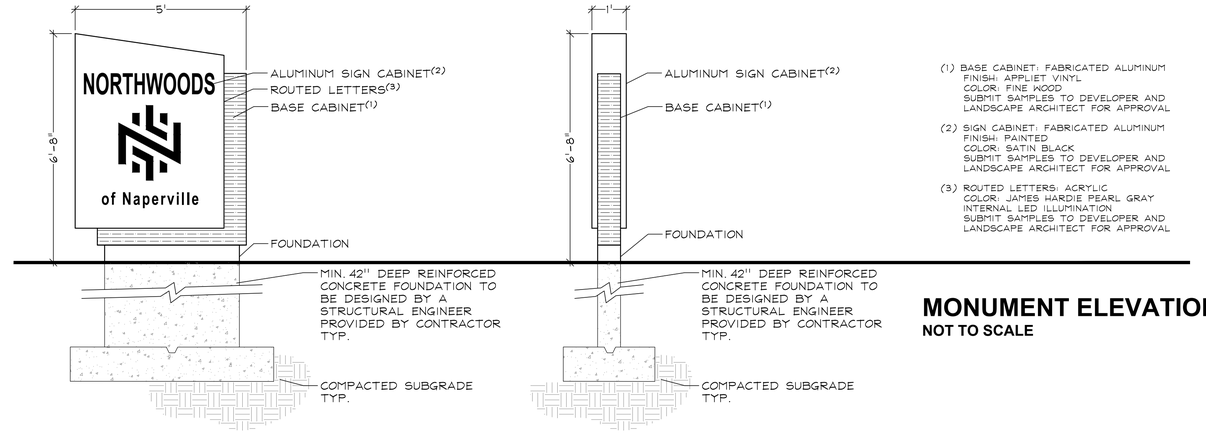

(1) BASE CABINET: FABRICATED ALUMINUM
FINISH: APPLIET VINYL
COLOR: FINE WOOD
SUBMIT SAMPLES TO DEVELOPER AND LANDSCAPE ARCHITECT FOR APPROVAL

(2) SIGN CABINET: FABRICATED ALUMINUM
FINISH: PAINTED
COLOR: SATIN BLACK
SUBMIT SAMPLES TO DEVELOPER AND LANDSCAPE ARCHITECT FOR APPROVAL

(3) ROUTED LETTERS: ACRYLIC
COLOR: JAMES HARDIE PEARL GRAY
INTERNAL LED ILLUMINATION
SUBMIT SAMPLES TO DEVELOPER AND LANDSCAPE ARCHITECT FOR APPROVAL

MONUMENT ELEVATIONS
NOT TO SCALE

MATCHLINE - SHEET 2

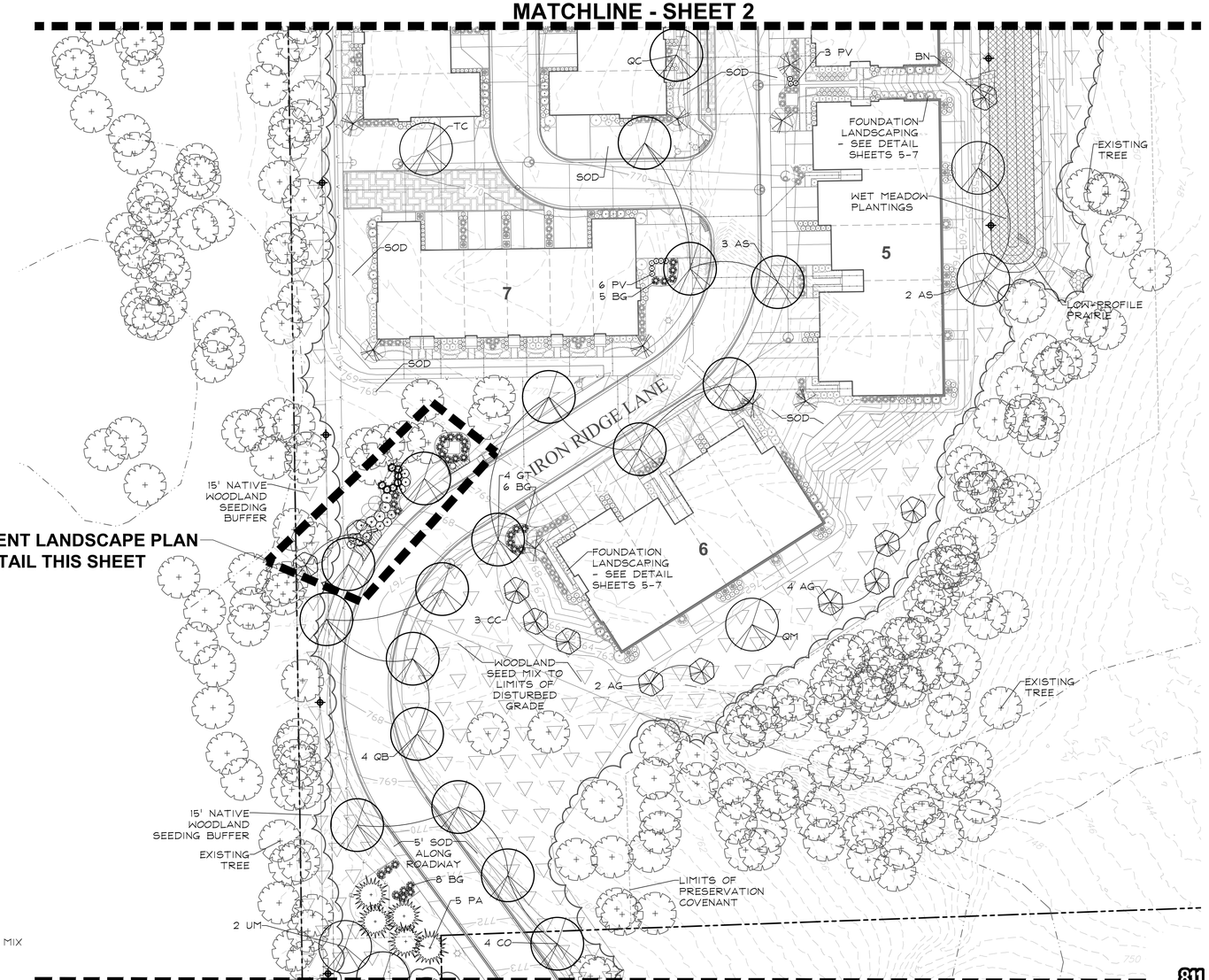

MATCHLINE - SHEET 4

NATIVE LEGEND

Key	Description
	WET MEADOW SEED MIX
	LOW PROFILE SEED MIX
	NATIVE WOODLAND SEED MIX
	NATIVE AREA SIGN

GARY R. WEBER ASSOCIATES, INC.
LAND PLANNING
ECOLOGICAL CONSULTING
LANDSCAPE ARCHITECTURE
402 W. LIBERTY DRIVE
WHEATON, ILLINOIS 60187
PHONE: 630-668-7197
www.grwainc.com

CLIENT
M/I HOMES
2135 CITY GATE LANE, SUITE 620
NAPERVILLE, IL 60563

ENGINEER
CAGE
2200 CABOT DRIVE
SUITE 325
LISLE, IL 60532

NORTHWOODS OF NAPERVILLE
NAPERVILLE, ILLINOIS
LANDSCAPE PLAN

03	07.07.2025
02	06.20.2025
01	05.23.2025
REVISIONS	

DATE	04.04.2025
PROJECT NO.	MI24251
DRAWN	AJG/CLE
CHECKED	DHS
SHEET NO.	

Know what's below. Call before you dig.

EXHIBIT G

GARY R. WEBER
ASSOCIATES, INC.
LAND PLANNING
ECOLOGICAL CONSULTING
LANDSCAPE ARCHITECTURE
402 W. LIBERTY DRIVE
WHEATON, ILLINOIS 60187
PHONE: 630-668-7197
www.grwainc.com

CLIENT
M/I HOMES
2135 CITY GATE LANE, SUITE 620
NAPERVILLE, IL 60563

ENGINEER
CAGE
2200 CABOT DRIVE
SUITE 325
LISLE, IL 60532

MATCHLINE - SHEET 3

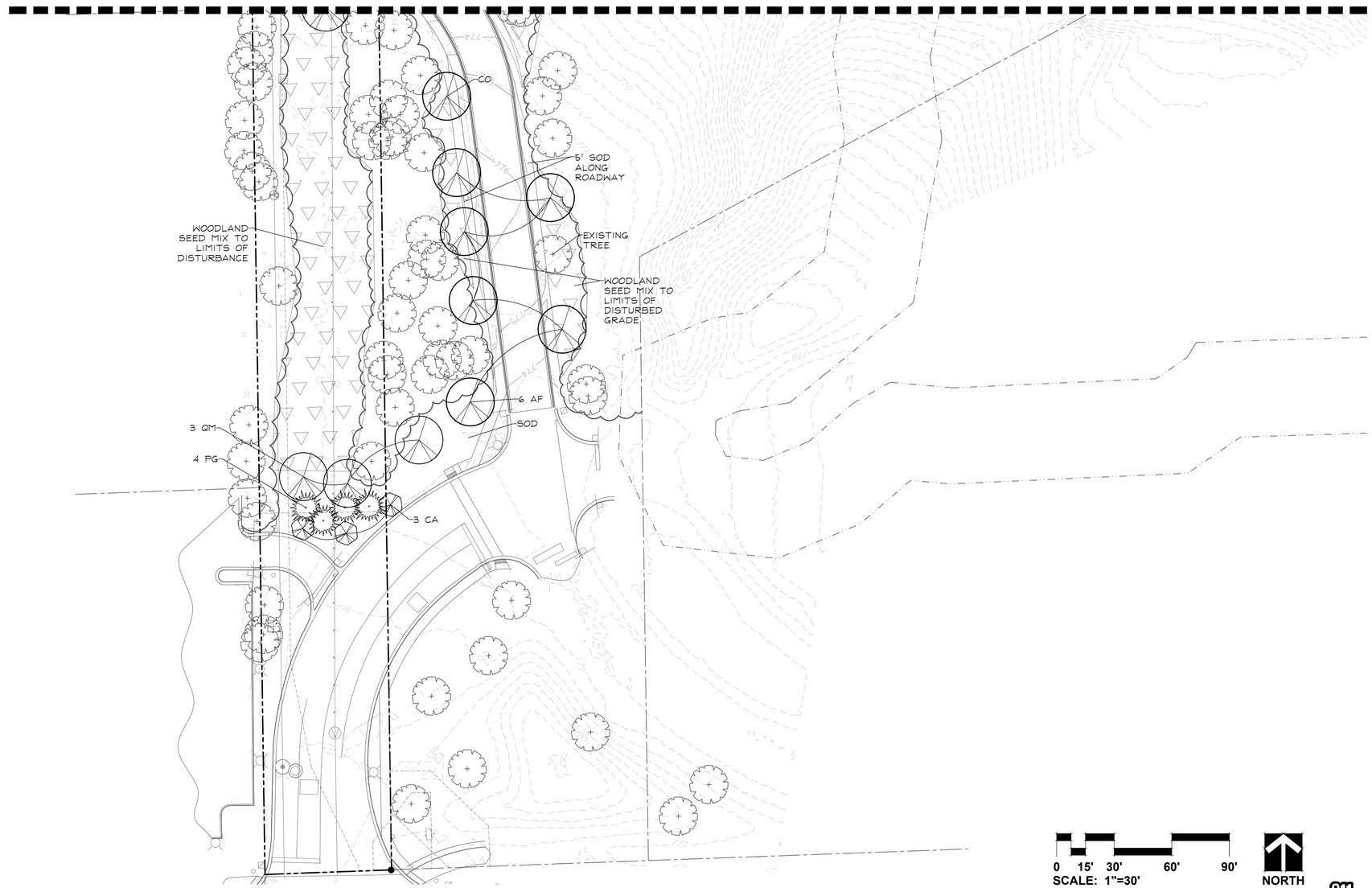

NATIVE LEGEND

Key	Description
	WET MEADOW SEED MIX
	LOW PROFILE SEED MIX
	NATIVE WOODLAND SEED MIX
	NATIVE AREA SIGN

NORTHWOODS OF NAPERVILLE
NAPERVILLE, ILLINOIS
LANDSCAPE PLAN

REVISIONS	
03	07.07.2025
02	06.20.2025
01	05.23.2025

DATE	04.04.2025
PROJECT NO.	MI24251
DRAWN	AJG/CLE
CHECKED	DHS
SHEET NO.	4 OF 14

Know what's below. Call before you dig.

EXHIBIT G

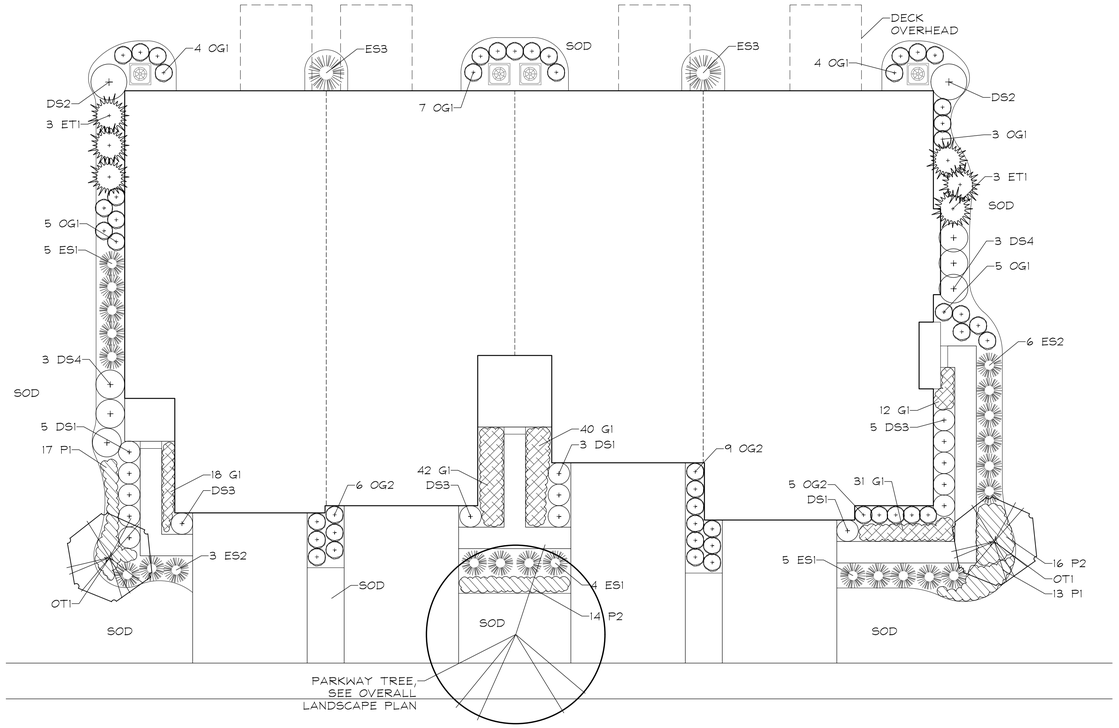

TYPICAL 4 UNIT FRONT-LOAD TOWNHOME FOUNDATION LANDSCAPE PLAN

SCALE: 1"=10'

4-UNIT TOWNHOME PLANT LIST
(BLDG. 6)

Key	Qty	Botanical/Common Name	Size	Remarks
		ORNAMENTAL TREES		
OT1	2	Syringa reticulata 'Ivory Silk' IVORY SILK JAPANESE TREE LILAC	6' Ht.	Multi-Stem
		EVERGREEN TREES		
ET1	6	Thuja occidentalis 'Smaragd' EMERALD GREEN ARBORVITAE	5' Ht.	4' O.C.
		DECIDUOUS SHRUBS		
DS1	9	Hydrangea quercifolia 'Munchkin' MUNCHKIN OAKLEAF HYDRANGEA	24" Tall	3' O.C.
DS2	2	Cornus sericea 'Bailey' BAILEY'S REDTWIG DOGWOOD	30" Tall	4' O.C.
DS3	7	Weigela Florida 'Bramwell' FINE WINE WEIGELA	24" Tall	3' O.C.
DS4	6	Syringa meyeri 'Palibin' DWARF KOREAN LILAC	24" Tall	4' O.C.
		EVERGREEN SHRUBS		
ES1	14	Juniperus x pfitzeriana 'Kallay's Compact' KALLAY'S COMPACT PFITZER JUNIPER	24" Wide	4' O.C.
ES2	9	Buxus x 'Green Velvet' GREEN VELVET BOXWOOD	24" Wide	4' O.C.
ES3	2	Thuja occidentalis 'Nigra' DARK GREEN ARBORVITAE	8' Ht.	4' O.C.
		ORNAMENTAL GRASSES		
OG1	28	Calamagrostis x acutiflora 'Karl Foerster' FEATHER REED GRASS	#1	30" O.C.
OG2	20	Sporobolis heterolepis PRAIRIE DROPSEED	#1	24" O.C.
		PERENNIALS		
P1	30	Hemerocallis 'Rosy Returns' ROSY RETURNS DAYLILY	#1	18" O.C.
P2	30	Salvia nemorosa 'East Friesland' EAST FRIESLAND SALVIA	#1	18" O.C.
		GROUNDCOVER		
G1	143	Antennaria plantaginifolia PUSSYTOES	#SP4	12" O.C.
		MISC. MATERIALS		
	10.4	SHREDDED HARDWOOD MULCH	C.Y.	

5-UNIT TOWNHOME PLANT LIST
(BLDG. 3)

Key	Qty	Botanical/Common Name	Size	Remarks
		ORNAMENTAL TREES		
OT1	2	Magnolia stellata 'Royal Star' ROYAL STAR MAGNOLIA	6' Ht.	Multi-Stem
		EVERGREEN TREES		
ET1	6	Thuja occidentalis 'Smaragd' EMERALD GREEN ARBORVITAE	5' Ht.	4' O.C.
		DECIDUOUS SHRUBS		
DS1	12	Rosa 'Radrazz' KNOCKOUT ROSE	18" Tall	3' O.C.
DS2	2	Viburnum dentatum 'Christom' BLUE MUFFIN ARROWWOOD VIBURNUM	30" Tall	4' O.C.
DS3	7	Itea virginica 'Sprich' LITTLE HENRY VIRGINIA SWEETSPIRE	24" Tall	3' O.C.
DS4	6	Syringa meyeri 'Palibin' DWARF KOREAN LILAC	24" Tall	4' O.C.
		EVERGREEN SHRUBS		
ES1	14	Juniperus x pfitzeriana 'Kallay's Compact' KALLAY'S COMPACT PFITZER JUNIPER	24" Wide	4' O.C.
ES2	12	Buxus 'Glencoe' CHICAGOLAND GREEN BOXWOOD	24" Wide	4' O.C.
ES3	2	Thuja occidentalis 'Nigra' DARK GREEN ARBORVITAE	8' Ht.	4' O.C.
		ORNAMENTAL GRASSES		
OG1	33	Calamagrostis x acutiflora 'Karl Foerster' FEATHER REED GRASS	#1	30" O.C.
OG2	21	Pennisetum alopecuroides 'Hameln' DWARF FOUNTAIN GRASS	#1	24" O.C.
		PERENNIALS		
P1	30	Hemerocallis 'Rosy Returns' ROSY RETURNS DAYLILY	#1	18" O.C.
P2	30	Coreopsis verticillata 'Zagreb' ZAGREB COREOPSIS	#1	18" O.C.
		GROUNDCOVER		
G1	132	Iris cristata DWARF CRESTED IRIS	#SP4	12" O.C.
		MISC. MATERIALS		
	11.5	SHREDDED HARDWOOD MULCH	C.Y.	

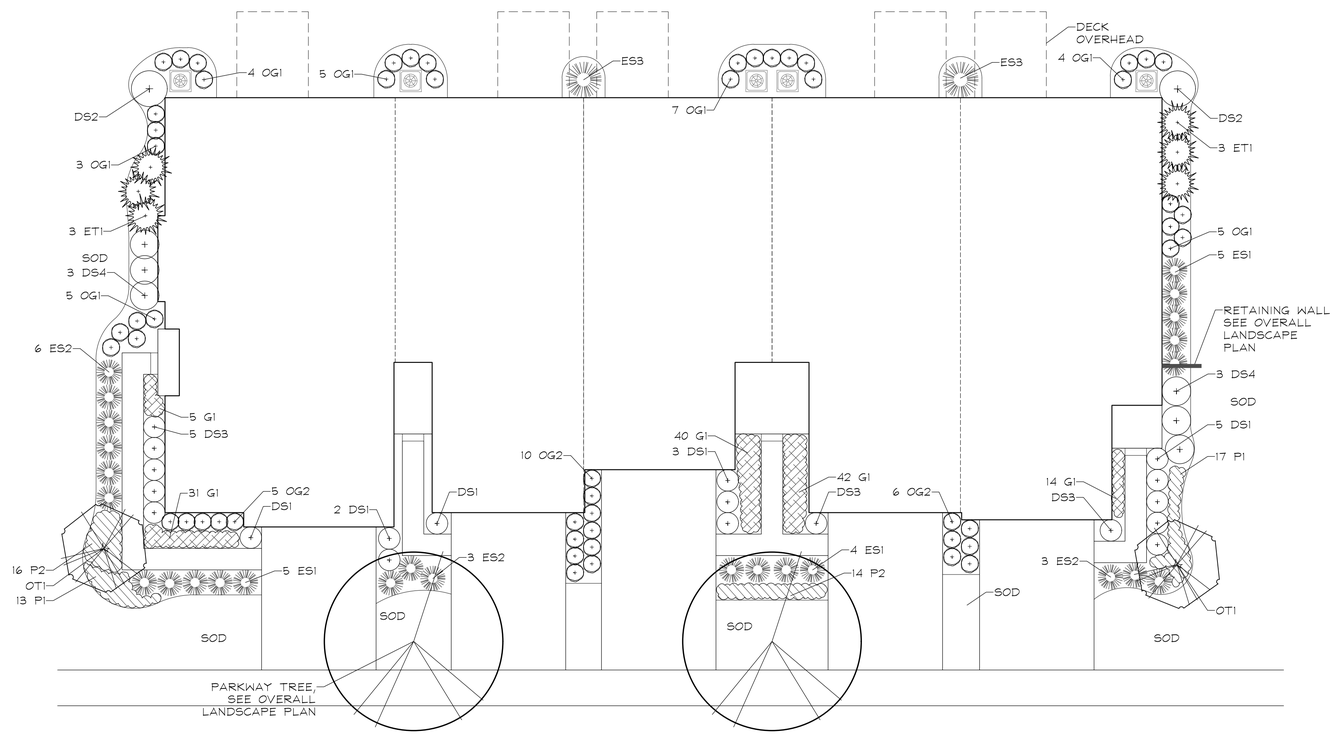

TYPICAL 5 UNIT FRONT-LOAD TOWNHOME FOUNDATION LANDSCAPE PLAN

SCALE: 1"=10'

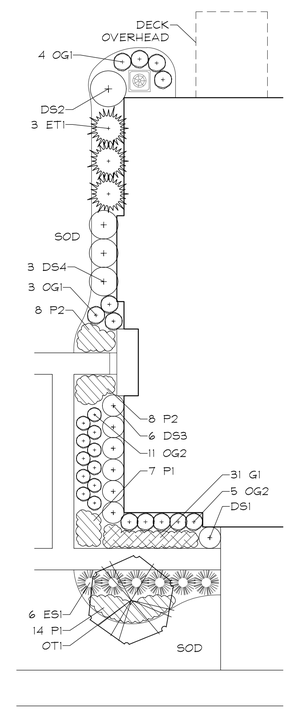

ALTERNATE 5 UNIT END FOUNDATION LANDSCAPE PLAN

SCALE: 1"=10'

5-UNIT TOWNHOME ALTERNATE END PLANT LIST
(BLDGS. 2, 4, 5)

Key	Qty	Botanical/Common Name	Size	Remarks
		ORNAMENTAL TREES		
OT1	2	Magnolia stellata 'Royal Star' ROYAL STAR MAGNOLIA	6' Ht.	Multi-Stem
		EVERGREEN TREES		
ET1	6	Thuja occidentalis 'Smaragd' EMERALD GREEN ARBORVITAE	5' Ht.	4' O.C.
		DECIDUOUS SHRUBS		
DS1	12	Rosa 'Radrazz' KNOCKOUT ROSE	18" Tall	3' O.C.
DS2	2	Viburnum dentatum 'Christom' BLUE MUFFIN ARROWWOOD VIBURNUM	30" Tall	4' O.C.
DS3	8	Itea virginica 'Sprich' LITTLE HENRY VIRGINIA SWEETSPIRE	24" Tall	3' O.C.
DS4	6	Syringa meyeri 'Palibin' DWARF KOREAN LILAC	24" Tall	4' O.C.
		EVERGREEN SHRUBS		
ES1	15	Juniperus x pfitzeriana 'Kallay's Compact' KALLAY'S COMPACT PFITZER JUNIPER	24" Wide	4' O.C.
ES2	6	Buxus x 'Green Velvet' GREEN VELVET BOXWOOD	24" Wide	4' O.C.
ES3	2	Thuja occidentalis 'Nigra' DARK GREEN ARBORVITAE	8' Ht.	4' O.C.
		ORNAMENTAL GRASSES		
OG1	28	Calamagrostis x acutiflora 'Karl Foerster' FEATHER REED GRASS	#1	30" O.C.
OG2	32	Pennisetum alopecuroides 'Hameln' DWARF FOUNTAIN GRASS	#1	24" O.C.
		PERENNIALS		
P1	38	Hemerocallis 'Rosy Returns' ROSY RETURNS DAYLILY	#1	18" O.C.
P2	30	Salvia nemorosa 'East Friesland' EAST FRIESLAND SALVIA	#1	18" O.C.
		GROUNDCOVER		
G1	127	Iris cristata DWARF CRESTED IRIS	#SP4	12" O.C.
		MISC. MATERIALS		
	11.4	SHREDDED HARDWOOD MULCH	C.Y.	

EXHIBIT G

GRWA
GARY R. WEBER ASSOCIATES, INC.
LAND PLANNING
ECOLOGICAL CONSULTING
LANDSCAPE ARCHITECTURE
402 W. LIBERTY DRIVE
WHEATON, ILLINOIS 60187
PHONE: 630-668-7197
www.grwainc.com

CLIENT
M/I HOMES
2135 CITY GATE LANE, SUITE 620
NAPERVILLE, IL 60563

ENGINEER
CAGE
2200 CABOT DRIVE
SUITE 325
LISLE, IL 60532

NORTHWOODS OF NAPERVILLE
NAPERVILLE, ILLINOIS

TYPICAL FOUNDATION LANDSCAPE PLANS

03	07.07.2025
02	06.20.2025
01	05.23.2025

REVISIONS

DATE	04.04.2025
PROJECT NO.	MI24251
DRAWN	AJG/CLE
CHECKED	DHS

SHEET NO.

811 Know what's below. Call before you dig.

XREFS:

PLOT CONFIG:

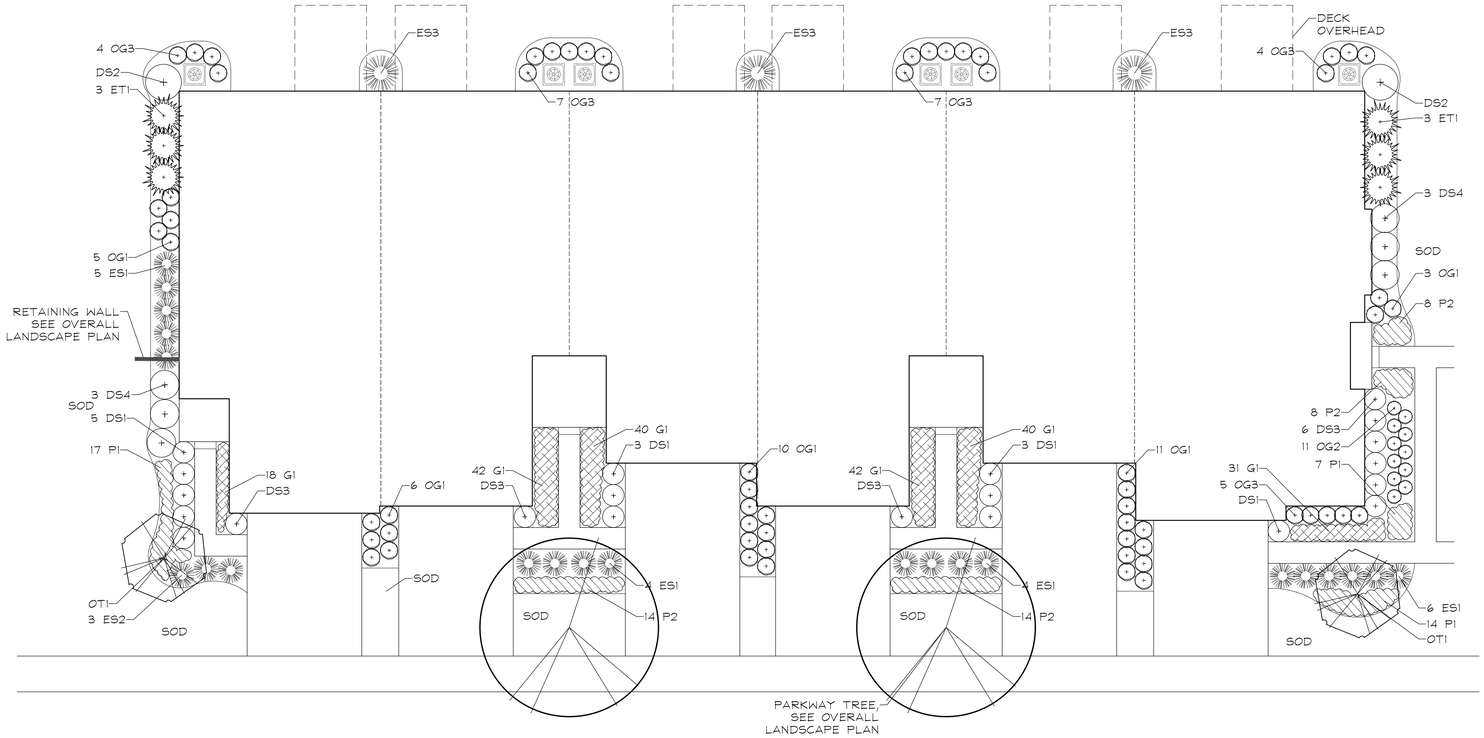

TYPICAL 6 UNIT FRONT-LOAD TOWNHOME FOUNDATION LANDSCAPE PLAN

SCALE: 1"=10'

6-UNIT FRONT-LOAD TOWNHOME PLANT LIST
(BLDG. 1)

Key	Qty	Botanical/Common Name	Size	Remarks
		ORNAMENTAL TREES		
OT1	2	Malus sargentii SARGENT CRABAPPLE	6' Tall	Clump Form
		EVERGREEN TREES		
ET1	6	Thuja occidentalis 'Smaragd' EMERALD GREEN ARBORVITAE	5' Ht.	4' O.C.
		DECIDUOUS SHRUBS		
DS1	12	Hydrangea quercifolia 'Munchkin' MUNCHKIN OAKLEAF HYDRANGEA	24" Tall	3' O.C.
DS2	2	Viburnum dentatum 'Christam' BLUE MUFFIN ARROWWOOD VIBURNUM	30" Tall	4' O.C.
DS3	9	Itea virginica 'Sprich' LITTLE HENRY VIRGINIA SWEETSPIRE	24" Tall	3' O.C.
DS4	6	Syringa meyeri 'Palibin' DWARF KOREAN LILAC	24" Tall	4' O.C.
		EVERGREEN SHRUBS		
ES1	19	Juniperus x pfitzeriana 'Kallay's Compact' KALLAY'S COMPACT PFITZER JUNIPER	24" Wide	4' O.C.
ES2	3	Buxus x 'Green Velvet' GREEN VELVET BOXWOOD	24" Wide	4' O.C.
ES3	3	Thuja occidentalis 'Nigra' DARK GREEN ARBORVITAE	8' Ht.	4' O.C.
		ORNAMENTAL GRASSES		
OG1	35	Calamagrostis x acutiflora 'Karl Foerster' FEATHER REED GRASS	#1	30" O.C.
OG2	11	Bouteloua curtipendula SIDEOATS GRAMA	#1	24" O.C.
OG3	27	Panicum virgatum 'Rotstrahlbusch' RED SWITCHGRASS	#1	30" O.C.
		PERENNIALS		
P1	38	Hemerocallis 'Rosy Returns' ROSY RETURNS DAYLILY	#1	18" O.C.
P2	44	Hosta 'Patriot' PATRIOT HOSTA	#1	24" O.C.
		GROUNDCOVER		
G1	213	Antennaria plantaginifolia PUSSYTOES	#SP4	12" O.C.
		MISC. MATERIALS		
	19.0	SHREDDED HARDWOOD MULCH	C.Y.	

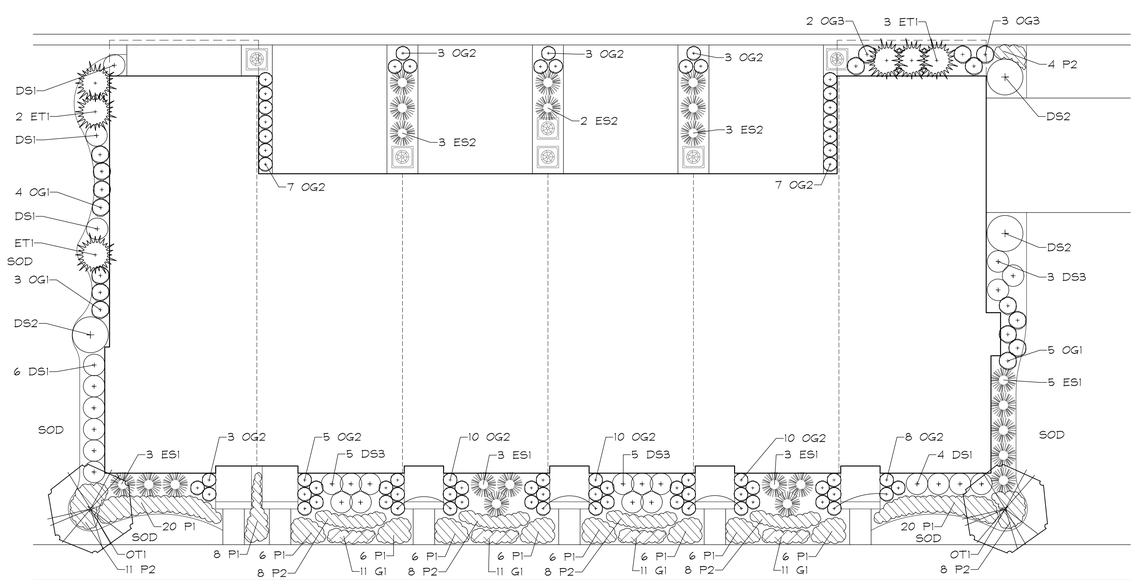

TYPICAL 6 UNIT REAR-LOAD TOWNHOME FOUNDATION LANDSCAPE PLAN

SCALE: 1"=10'

6-UNIT REAR-LOAD TOWNHOME PLANT LIST
(BLDG. 7)

Key	Qty	Botanical/Common Name	Size	Remarks
		ORNAMENTAL TREES		
OT1	2	Syringa reticulata 'Ivory Silk' IVORY SILK JAPANESE TREE LILAC	6' Tall	Clump Form
		EVERGREEN TREES		
ET1	6	Thuja occidentalis 'Smaragd' EMERALD GREEN ARBORVITAE	5' Ht.	4' O.C.
		DECIDUOUS SHRUBS		
DS1	13	Hydrangea quercifolia 'Munchkin' MUNCHKIN OAKLEAF HYDRANGEA	24" Tall	3' O.C.
DS2	3	Cornus sericea 'Baileyi' BAILEY'S REDTWIG DOGWOOD	30" Tall	4' O.C.
DS3	13	Weigela florida 'Bramwell' FINE WINE WEIGELA	24" Tall	3' O.C.
		EVERGREEN SHRUBS		
ES1	14	Buxus 'Glencoe' CHICAGOLAND GREEN BOXWOOD	24" Wide	4' O.C.
ES2	8	Juniperus chinensis 'Kollays Compact' KALLAY COMPACT PFITZER JUNIPER	24" Wide	4' O.C.
		ORNAMENTAL GRASSES		
OG1	12	Calamagrostis x acutiflora 'Karl Foerster' FEATHER REED GRASS	#1	30" O.C.
OG2	69	Sporobolis heterolepis PRAIRIE DROPSEED	#1	24" O.C.
OG3	5	Panicum virgatum 'Rotstrahlbusch' RED SWITCHGRASS	#1	30" O.C.
		PERENNIALS		
P1	96	Hemerocallis 'Rosy Returns' ROSY RETURNS DAYLILY	#1	18" O.C.
P2	55	Salvia nemorosa 'East Friesland' EAST FRIESLAND SALVIA	#1	18" O.C.
		GROUNDCOVER		
G1	44	Iris cristata DWARF CRESTED IRIS	#SP4	12" O.C.
		MISC. MATERIALS		
	11.7	SHREDDED HARDWOOD MULCH	C.Y.	

EXHIBIT G

GRWA
GARY R. WEBER ASSOCIATES, INC.
LAND PLANNING
ECOLOGICAL CONSULTING
LANDSCAPE ARCHITECTURE
402 W. LIBERTY DRIVE
WHEATON, ILLINOIS 60187
PHONE: 630-668-7197
www.grwainc.com

CLIENT
M/I HOMES
2135 CITY GATE LANE, SUITE 620
NAPERVILLE, IL 60563

ENGINEER
CAGE
2200 CABOT DRIVE
SUITE 325
LISLE, IL 60532

NORTHWOODS OF NAPERVILLE
NAPERVILLE, ILLINOIS

TYPICAL FOUNDATION LANDSCAPE PLANS

03	07.07.2025
02	06.20.2025
01	05.23.2025

REVISIONS

DATE	04.04.2025
PROJECT NO.	MI24251
DRAWN	AJG/CLE
CHECKED	DHS
SHEET NO.	

6 OF 14

811 Know what's below. Call before you dig.

XREFS:

PLOT CONFIG:

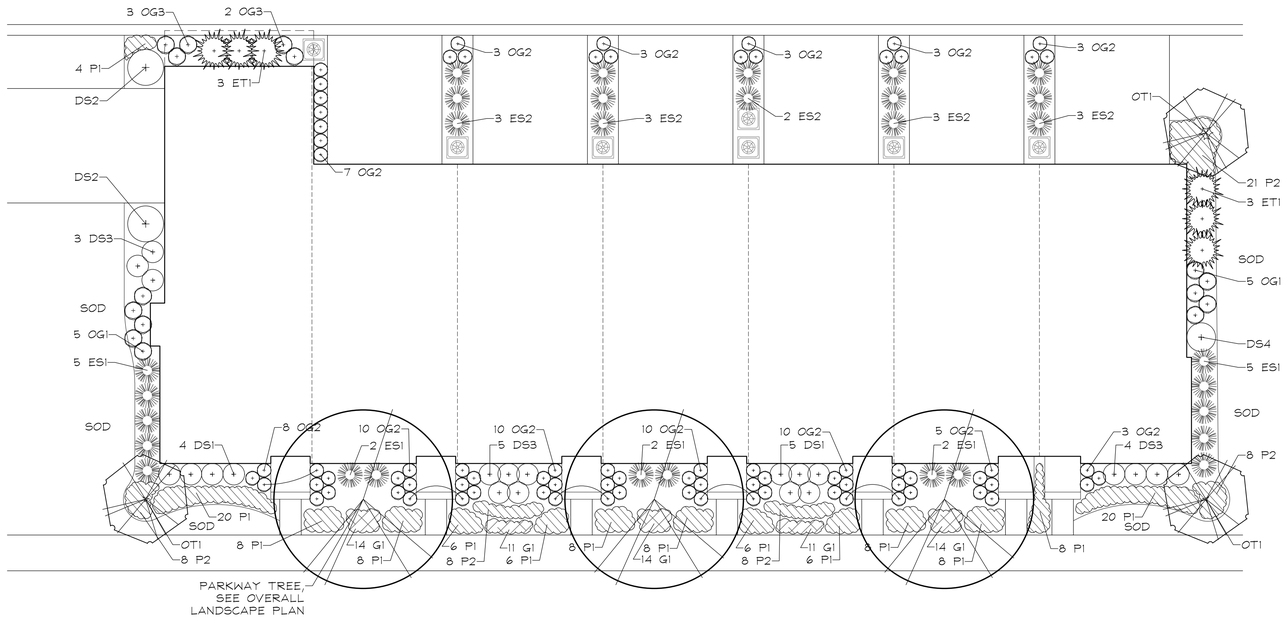

TYPICAL 7 UNIT REAR-LOAD TOWNHOME FOUNDATION LANDSCAPE PLAN

SCALE: 1"=10'

7-UNIT REAR-LOAD TOWNHOME PLANT LIST - A
(BLDGS. 10 & 11)

Key	Qty	Botanical/Common Name	Size	Remarks
		ORNAMENTAL TREES		
OT1	3	Syringa reticulata 'Ivory Silk' IVORY SILK JAPANESE TREE LILAC	6' Tall	Clump Form
		EVERGREEN TREES		
ET1	6	Thuja occidentalis 'Smaragd' EMERALD GREEN ARBORVITAE	5' Ht.	4' O.C.
		DECIDUOUS SHRUBS		
DS1	9	Hydrangea quercifolia 'Munchkin' MUNCHKIN OAKLEAF HYDRANGEA	24" Tall	3' O.C.
DS2	2	Cornus sericea 'Baileyi' BAILEY'S REDTWIG DOGWOOD	30" Tall	4' O.C.
DS3	12	Weigela florida 'Bramwell' FINE WINE WEIGELA	24" Tall	3' O.C.
DS4	1	Syringa meyeri 'Palibin' DWARF KOREAN LILAC	24" Tall	4' O.C.
		EVERGREEN SHRUBS		
ES1	16	Buxus 'Glencoe' CHICAGOLAND GREEN BOXWOOD	24" Wide	4' O.C.
ES2	14	Juniperus chinensis 'Kallays Compact' KALLAY COMPACT PFITZER JUNIPER	24" Wide	4' O.C.
		ORNAMENTAL GRASSES		
OG1	10	Calamagrostis x acutiflora 'Karl Foerster' FEATHER REED GRASS	#1	30" O.C.
OG2	78	Sporobolis heterolepis PRAIRIE DROPSEED	#1	24" O.C.
OG3	5	Bouteloua curtipendula SIDEOATS GRAMA	#1	30" O.C.
		PERENNIALS		
P1	124	Hemerocallis 'Rosy Returns' ROSY RETURNS DAYLILY	#1	18" O.C.
P2	53	Hosta 'Patriot' PATRIOT HOSTA	#1	24" O.C.
		GROUNDCOVER		
G1	64	Antennaria plantaginifolia PUSSYTOES	#SP4	12" O.C.
		MISC. MATERIALS		
	13.5	SHREDDED HARDWOOD MULCH	C.Y.	

7-UNIT REAR-LOAD TOWNHOME PLANT LIST - B
(BLDGS. 8 & 9)

Key	Qty	Botanical/Common Name	Size	Remarks
		ORNAMENTAL TREES		
OT1	3	Magnolia stellata 'Royal Star' ROYAL STAR MAGNOLIA	6' Ht.	Multi-Stem
		EVERGREEN TREES		
ET1	6	Thuja occidentalis 'Smaragd' EMERALD GREEN ARBORVITAE	5' Ht.	4' O.C.
		DECIDUOUS SHRUBS		
DS1	9	Rosa 'Radrazz' KNOCKOUT ROSE	18" Tall	3' O.C.
DS2	2	Viburnum dentatum 'Christom' BLUE MUFFIN ARROWWOOD VIBURNUM	30" Tall	4' O.C.
DS3	12	Itea virginica 'Sprich' LITTLE HENRY VIRGINIA SWEETSPIRE	24" Tall	3' O.C.
DS4	1	Syringa meyeri 'Palibin' DWARF KOREAN LILAC	24" Tall	4' O.C.
		EVERGREEN SHRUBS		
ES1	16	Buxus x 'Green Velvet' GREEN VELVET BOXWOOD	24" Wide	4' O.C.
ES2	14	Juniperus chinensis 'Kallays Compact' KALLAY COMPACT PFITZER JUNIPER	24" Wide	4' O.C.
		ORNAMENTAL GRASSES		
OG1	10	Calamagrostis x acutiflora 'Karl Foerster' FEATHER REED GRASS	#1	30" O.C.
OG2	78	Pennisetum alopecuroides 'Hameln' DWARF FOUNTAIN GRASS	#1	24" O.C.
OG3	5	Panicum virgatum 'Rotstrahlbusch' RED SWITCHGRASS	#3	36" O.C.
		PERENNIALS		
P1	124	Hemerocallis 'Rosy Returns' ROSY RETURNS DAYLILY	#1	18" O.C.
P2	53	Salvia nemorosa 'East Friesland' EAST FRIESLAND SALVIA	#1	18" O.C.
		GROUNDCOVER		
G1	64	Iris cristata DWARF CRESTED IRIS	#SP4	12" O.C.
		MISC. MATERIALS		
	13.5	SHREDDED HARDWOOD MULCH	C.Y.	

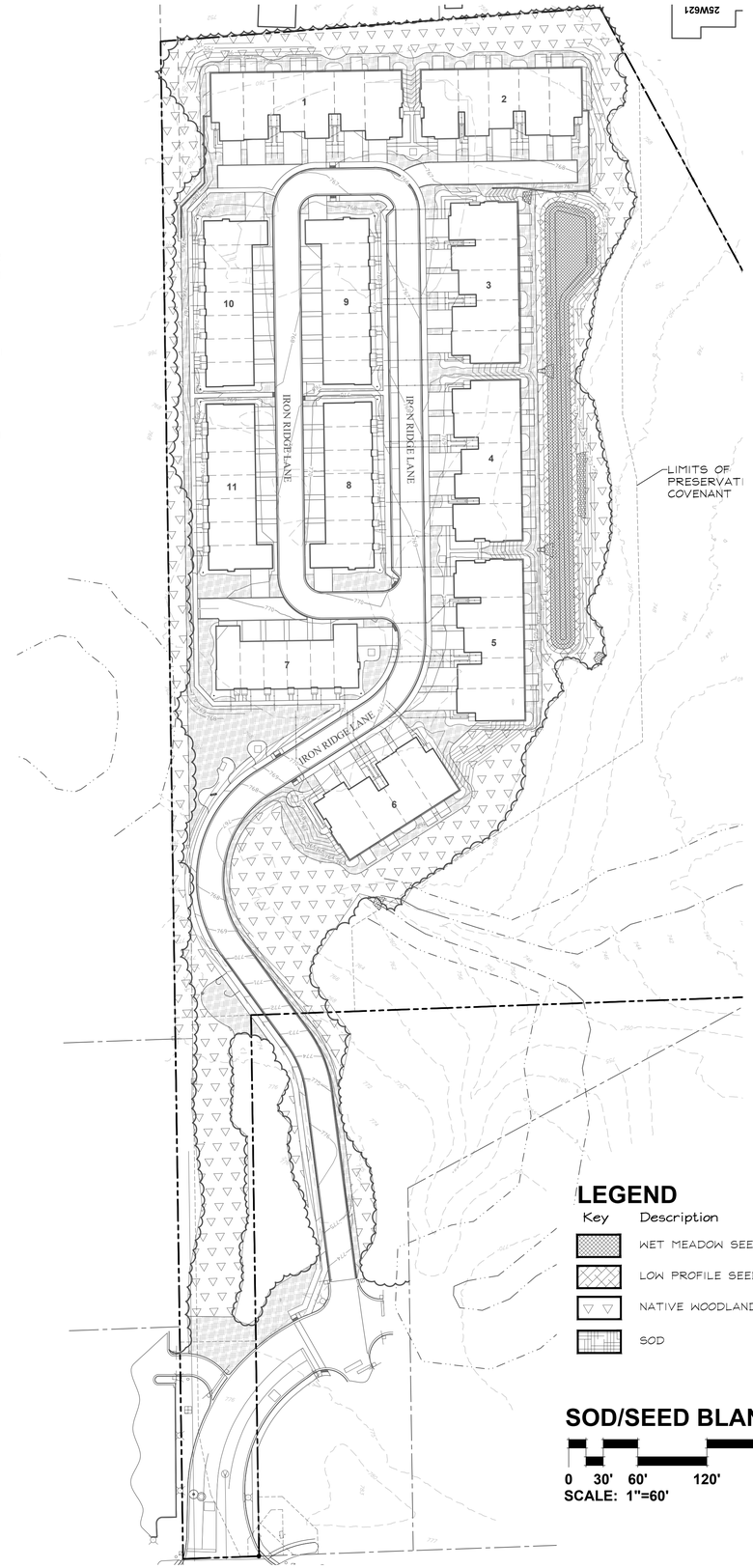

SOD/SEED BLANKET PLAN

0 30' 60' 120' 180'
SCALE: 1"=60'

NORTH

Know what's below. Call before you dig.

GARY R. WEBER ASSOCIATES, INC.
LAND PLANNING
ECOLOGICAL CONSULTING
LANDSCAPE ARCHITECTURE
402 W. LIBERTY DRIVE
WHEATON, ILLINOIS 60187
PHONE: 630-668-7197
www.grwainc.com

CLIENT
M/I HOMES
2135 CITY GATE LANE, SUITE 620
NAPERVILLE, IL 60563

ENGINEER
CAGE
2200 CABOT DRIVE
SUITE 325
LISLE, IL 60532

NORTHWOODS OF NAPERVILLE
NAPERVILLE, ILLINOIS

TYPICAL FOUNDATION LANDSCAPE PLANS

REVISIONS	
03	07.07.2025
02	06.20.2025
01	05.23.2025

DATE	04.04.2025
PROJECT NO.	MI24251
DRAWN	AJG/CLE
CHECKED	DHS
SHEET NO.	7 OF 14

EXHIBIT G

RATING AND SURVEY CRITERIA

1) Trees measured at 4.5 ft above the ground - DBH (diameter Breast Height)
2) All trees 4" DBH and above tagged. Dead trees were tagged for removal. Invasive shrubs were not tagged.
3) Health Rating:

Rating	Description	Criteria
1	Excellent	Less than 10% dead wood, typical growth for species, no observed defects
2	Good	Less than 20% dead wood, minor defects, sound structure, no decay
3	Fair	Less than 30% dead wood, minor crown die-back, minor trunk damage or cavities
4	Fair to Poor	Approximately 30-50% dead wood, lacking full crown, minor disease evidence, trunk damage
5	Poor	Over 50% dead wood, lacking full crown, disease or decay evident, structural damage/cavities
6	Dead	Less than 10% living wood, greater than 50% missing bark, adventitious growth only, decay

TOTAL TREE COUNT: 845

TAG NO.	SCIENTIFIC NAME	COMMON NAME	DBH (inches)	CONDITION	STRUCTURE	HEALTH	PROPOSED ACTION	NOTES
623	*Gleditsia triacanthos*	Honey Locust	9	2 - Good			Remove	Conflict with proposed development
624	*Gleditsia triacanthos*	Honey Locust	9	2 - Good			Remove	Conflict with proposed development
625	*Gleditsia triacanthos*	Honey Locust	10	2 - Good			Remove	Conflict with proposed development
626	*Gleditsia triacanthos*	Honey Locust	9	2 - Good			Remove	Conflict with proposed development
627	*Gleditsia triacanthos*	Honey Locust	10	2 - Good			Remove	Conflict with proposed development
628	Gleditsia triacanthos	Honey Locust	10	3 - Fair	poor root collar		Remove	Conflict with proposed development
629	*Acer saccharum*	Sugar Maple	8	3 - Fair	Unbalanced		Remove	Conflict with proposed development
630	*Acer saccharum*	Sugar Maple	8	5 - Poor		40% dead wood, Hollow	Remove	Conflict with proposed development
631	*Acer saccharum*	Sugar Maple	7	4 - Fair/Poor	Crowded	Dead Limbs	Remove	Conflict with proposed development
632	*Ulmus americana*	American Elm	10	4 - Fair/Poor	Lean, Unbalanced		Remove	Conflict with proposed development
633	*Quercus alba*	White Oak	20	3 - Fair	Unbalanced		Remove	Conflict with proposed development
634	*Quercus alba*	White Oak	22	4 - Fair/Poor		20% dead wood, Dead Limbs	Remove	Conflict with proposed development
635	*Quercus alba*	White Oak	22	2 - Good			Remove	Conflict with proposed development
636	*Quercus alba*	White Oak	20	4 - Fair/Poor		20% dead wood, Dead Limbs	Remove	Conflict with proposed development
637	*Quercus alba*	White Oak	20	3 - Fair		Dead Limbs	Remove	Conflict with proposed development
638	*Juglans nigra*	Black Walnut	18	2 - Good			Remove	Conflict with proposed development
639	*Acer saccharum*	Sugar Maple	6	2 - Good			Remove	Conflict with proposed development
640	*Ulmus americana*	American Elm	12	6 - Dead			Remove	Conflict with proposed development
641	*Acer saccharum*	Sugar Maple	6	2 - Good			Remove	Conflict with proposed development
642	*Ulmus americana*	American Elm	7	3 - Fair	Lean, Crowded		Remove	Conflict with proposed development
643	*Acer saccharum*	Sugar Maple	10	2 - Good			Remove	Conflict with proposed development
644	*Quercus alba*	White Oak	26	3 - Fair		Dead Limbs, Tip die-back	Remove	Conflict with proposed development
645	*Ulmus americana*	American Elm	4	4 - Fair/Poor	Crown Lean, Crowded		Remove	Conflict with proposed development
646	*Quercus alba*	White Oak	26	3 - Fair	Crown Lean		Remove	Conflict with proposed development
647	*Ulmus americana*	American Elm	11	4 - Fair/Poor	Unbalanced, Crown Lean		Remove	Conflict with proposed development
648	*Ulmus americana*	American Elm	4	4 - Fair/Poor	Unbalanced, Crown Lean		Remove	Conflict with proposed development
649	*Pinus strobus*	White Pine	8	3 - Fair	Unbalanced		Remove	Conflict with proposed development
650	*Quercus alba*	White Oak	32	2 - Good		Tip die-back	Remove	Conflict with proposed development
651	*Acer saccharum*	Sugar Maple	11	4 - Fair/Poor		Adventitious Growth, Trunk Scar	Remove	Conflict with proposed development
652	*Quercus alba*	White Oak	20	2 - Good			Remove	Conflict with proposed development
653	*Acer saccharinum*	Silver Maple	5	2 - Good			Remove	Conflict with proposed development
654	*Ulmus americana*	American Elm	7	5 - Poor	Lean	Cavity	Remove	Conflict with proposed development
655	*Prunus serotina*	Black Cherry	10	5 - Poor	Crown Lean	40% dead wood, Dead Limbs	Remove	Conflict with proposed development
656	*Acer saccharum*	Sugar Maple	8	2 - Good			Remove	Conflict with proposed development
657	*Acer saccharum*	Sugar Maple	5	3 - Fair	Unbalanced, Crowded		Remove	Conflict with proposed development
658	*Quercus alba*	White Oak	31	2 - Good			Remove	Conflict with proposed development
659	*Ulmus americana*	American Elm	7	4 - Fair/Poor	Unbalanced, Crown Lean	20% dead wood	Remove	Conflict with proposed development
660	*Acer saccharum*	Sugar Maple	4	2 - Good			Remove	Conflict with proposed development
661	*Quercus alba*	White Oak	18	2 - Good			Remove	Conflict with proposed development
662	*Quercus alba*	White Oak	15	3 - Fair		20% dead wood	Remove	Conflict with proposed development
663	*Ulmus americana*	American Elm	6	5 - Poor	Unbalanced, Crown Lean	30% dead wood	Remove	Conflict with proposed development
664	*Quercus alba*	White Oak	20	4 - Fair/Poor	Unbalanced	Adventitious Growth	Remove	Conflict with proposed development
665	*Quercus alba*	White Oak	21	3 - Fair		Adventitious Growth	Remove	Conflict with proposed development
666	*Quercus alba*	White Oak	23	2 - Good		Tip die-back	Remove	Conflict with proposed development
667	*Acer saccharum*	Sugar Maple	4	2 - Good			Remove	Conflict with proposed development
668	*Acer saccharum*	Sugar Maple	6	2 - Good			Remove	Conflict with proposed development
669	*Quercus alba*	White Oak	18	2 - Good			Remove	Conflict with proposed development
670	*Quercus alba*	White Oak	19	3 - Fair		20% dead wood, Tip die-back	Remove	Conflict with proposed development
671	*Ulmus americana*	American Elm	8	4 - Fair/Poor		30% dead wood, Adventitious Growth	Remove	Conflict with proposed development
672	*Quercus alba*	White Oak	18	3 - Fair		Tip die-back	Remove	Conflict with proposed development
673	*Quercus alba*	White Oak	21	2 - Good		20% dead wood	Remove	Conflict with proposed development
674	*Quercus alba*	White Oak	16	3 - Fair	Crown Lean		Remove	Conflict with proposed development
675	*Acer saccharum*	Sugar Maple	10	2 - Good			Remove	Conflict with proposed development
2749	*Fraxinus spp.*	Ash	6	6 - Dead			Remove	Dead
2750	*Quercus rubra*	Red Oak	16	2 - Good	Unbalanced		Preserve	No impact
2751	*Carya cordiformis*	Bitternut Hickory	6	3 - Fair	Unbalanced, Crown Lean		Preserve	No impact
2752	*Quercus rubra*	Red Oak	20	2 - Good	Lean	10% dead wood, Dead Limbs	Preserve	No impact
2753	*Quercus rubra*	Red Oak	10	2 - Good	Unbalanced		Preserve	High quality tree near proposed impacts
2754	*Quercus rubra*	Red Oak	22	2 - Good	Broken Limb		Preserve	No impact
2755	*Quercus rubra*	Red Oak	18	2 - Good	Crown Lean		Preserve	High quality tree near proposed impacts
2756	*Quercus rubra*	Red Oak	14	3 - Fair	Unbalanced	Trunk Scar	Preserve	High quality tree near proposed impacts
2757	*Fraxinus spp.*	Ash	8	6 - Dead			Remove	Dead
2758	*Ulmus americana*	American Elm	4	2 - Good		10% dead wood	Remove	Conflict with proposed development
2759	*Juglans nigra*	Black Walnut	6	2 - Good	Unbalanced		Remove	Impact to critical root zone
2760	*Carya cordiformis*	Bitternut Hickory	5	2 - Good			Remove	Conflict with proposed development
2761	*Juglans nigra*	Black Walnut	4	2 - Good			Remove	Conflict with proposed development
2762	*Juglans nigra*	Black Walnut	8	2 - Good			Remove	Conflict with proposed development
2763	*Ulmus americana*	American Elm	18	4 - Fair/Poor	Lean, Broken Limb	Trunk Scar	Remove	Conflict with proposed development
2764	*Unknown*	Unknown	6	6 - Dead			Remove	Conflict with proposed development
2765	*Ulmus americana*	American Elm	8	3 - Fair	Lean, Unbalanced		Remove	Conflict with proposed development
2766	*Ulmus americana*	American Elm	4	4 - Fair/Poor	Lean, Crown Lean, Crowded		Remove	Conflict with proposed development
2767	*Ulmus americana*	American Elm	10	3 - Fair	Crown Lean		Remove	Conflict with proposed development
2768	*Ulmus americana*	American Elm	4	4 - Fair/Poor	Lean, Crown Lean, Crowded		Remove	Conflict with proposed development
2769	*Fraxinus spp.*	Ash	5	6 - Dead			Remove	Conflict with proposed development
2770	*Fraxinus spp.*	Ash	7	6 - Dead			Remove	Conflict with proposed development
2771	*Tilia americana*	American Basswood	4	2 - Good			Remove	Conflict with proposed development
2772	*Ulmus americana*	American Elm	8	2 - Good			Remove	Conflict with proposed development

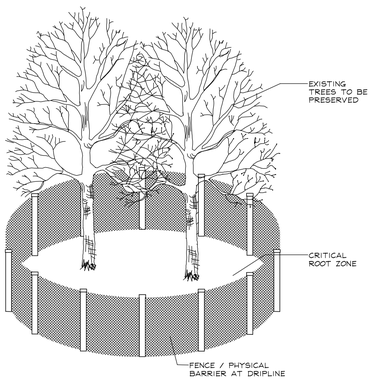

TREE PRESERVATION DETAIL

(NOT TO SCALE)
SEE NOTES

TREE PRESERVATION NOTES

1. Property line shall be located and staked by a professional land surveyor prior to tree removal.
2. Tree locations are shown utilizing a Trimble Catalyst GPS which does not constitute a professionally licensed survey. If survey-grade location and elevation of tagged trees is desired, a professional surveyor should be engaged.
3. 48" high snow fence or wood barriers shall extend to the dripline of the tree or tree mass whenever possible, shall be installed before construction begins, and should not be removed until the completion of construction.
4. Contractor shall take extreme care to protect the root system of existing trees. Should root pruning be necessary it shall not exceed 25% of the tree's root system and shall be done in accordance with recognized horticulture practices under the supervision of a professional arborists, Landscape Architect or Horticulturist.
5. All accidental damage to existing trees that are to be preserved shall be promptly treated as required in accordance with recognized horticultural practices and the instructions of the professional Arborist, Landscape Architect or Horticulturist.
6. Broken or badly bruised branches shall be removed with a clean cut. If recommended by the professional Arborist, Landscape Architect or Horticulturist.
7. Care shall be exercised by the contractors to protect all overhead limbs and branches from damage by contact with material, machinery or equipment and by damage from engine exhaust.
8. Contractors shall protect trees and vegetation against spills or discharge of fuels,lubricating oils, hydraulic fluids, anti-freeze and coolants, calcium chloride, lime and all other similar hydrocarbons, organic chemicals, and other materials which can be harmful.
9. When underground utilities are proposed within 5' of a preserved tree trunk, they must be augered if possible.

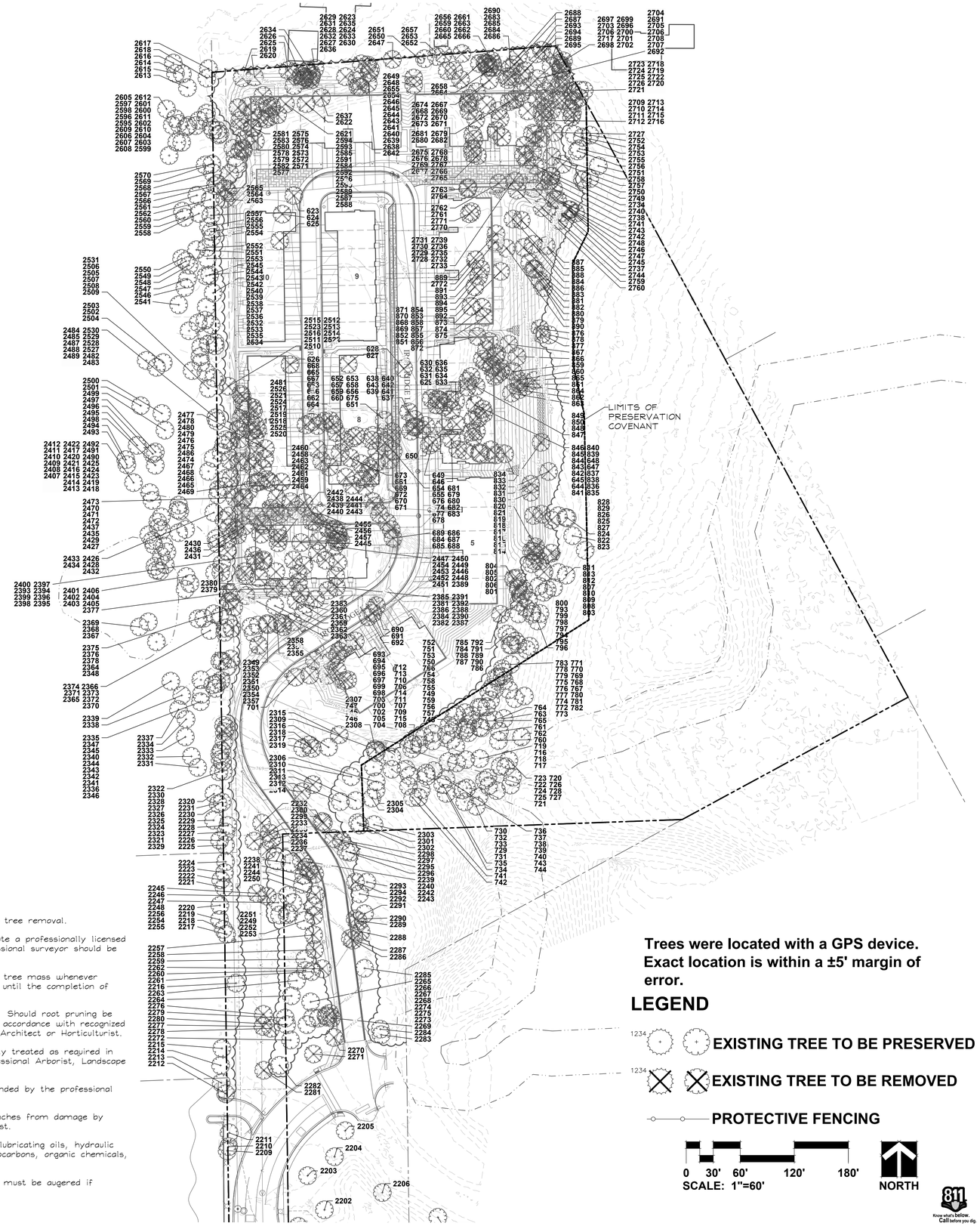

Trees were located with a GPS device. Exact location is within a ±5' margin of error.

LEGEND

EXISTING TREE TO BE PRESERVED

EXISTING TREE TO BE REMOVED

PROTECTIVE FENCING

0 30' 60' 120' 180'
SCALE: 1"=60'

NORTH

Know what's below. Call before you dig.

EXHIBIT G

GRWA
GARY R. WEBER ASSOCIATES, INC.
LAND PLANNING
ECOLOGICAL CONSULTING
LANDSCAPE ARCHITECTURE
402 W. LIBERTY DRIVE
WHEATON, ILLINOIS 60187
PHONE: 630-668-7197
www.grwainc.com

CLIENT
M/I HOMES
2135 CITY GATE LANE, SUITE 620
NAPERVILLE, IL 60563

ENGINEER
CAGE
2200 CABOT DRIVE
SUITE 325
LISLE, IL 60532

NORTHWOODS OF NAPERVILLE

NAPERVILLE, ILLINOIS

OVERALL TREE PRESERVATION PLAN

REVISIONS	
03	07.07.2025
02	06.20.2025
01	05.23.2025

DATE	04.04.2025
PROJECT NO.	MI24251
DRAWN	AJG/CLE
CHECKED	DHS
SHEET NO.	

LEGEND

EXISTING TREE TO BE PRESERVED

EXISTING TREE TO BE REMOVED

PROTECTIVE FENCING

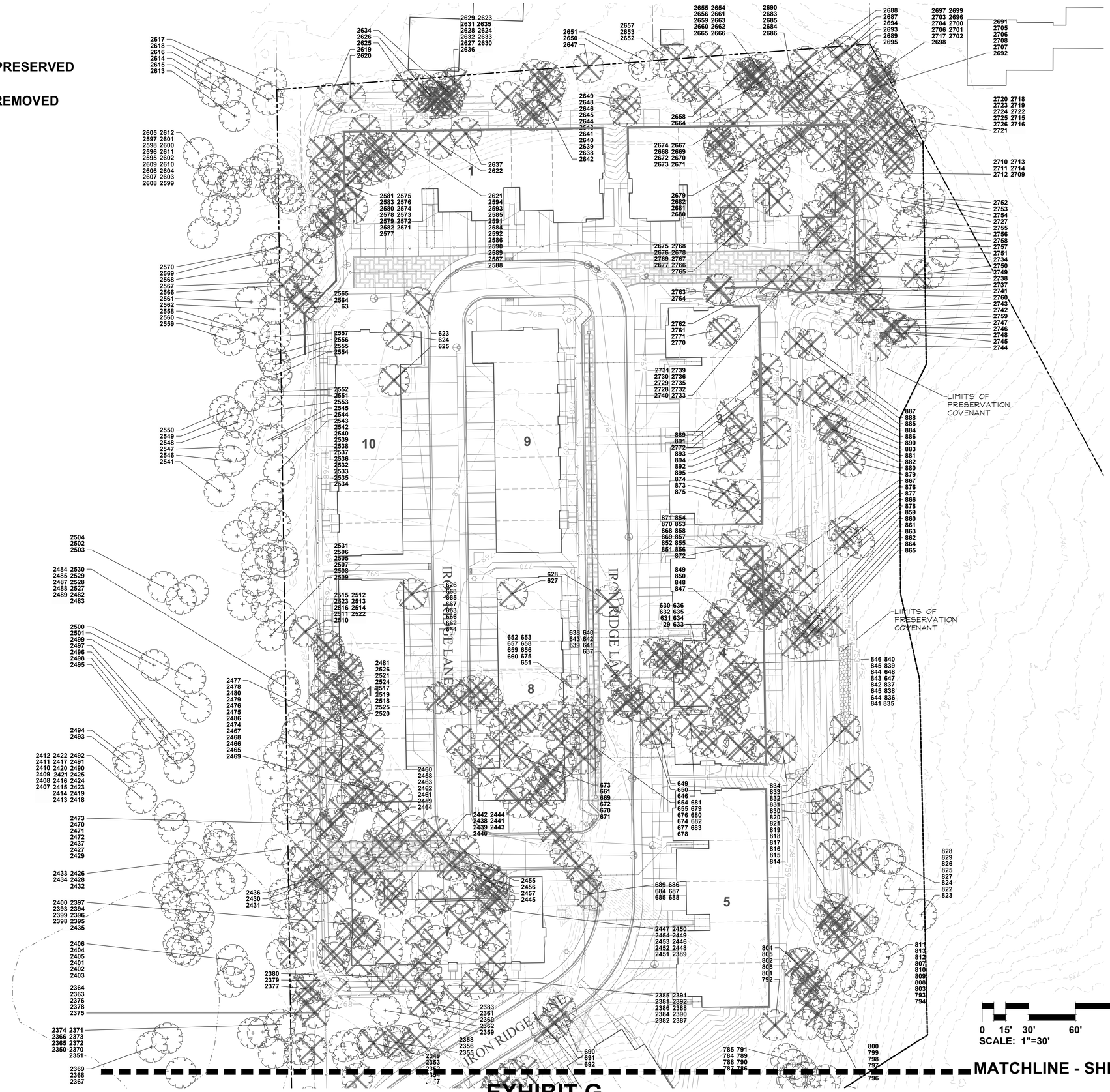

EXHIBIT G

GARY R. WEBER ASSOCIATES, INC.
LAND PLANNING
ECOLOGICAL CONSULTING
LANDSCAPE ARCHITECTURE
402 W. LIBERTY DRIVE
WHEATON, ILLINOIS 60187
PHONE: 630-668-7197
www.grwainc.com

CLIENT
M/I HOMES
2135 CITY GATE LANE, SUITE 620
NAPERVILLE, IL 60563

ENGINEER
CAGE
2200 CABOT DRIVE
SUITE 325
LISLE, IL 60532

NORTHWOODS OF NAPERVILLE

NAPERVILLE, ILLINOIS

TREE PRESERVATION PLAN

REVISIONS	
03	07.07.2025
02	06.20.2025
01	05.23.2025

DATE	04.04.2025
PROJECT NO.	MI24251
DRAWN	AJG/CLE
CHECKED	DHS
SHEET NO.	9 OF 14

Know what's below. Call before you dig.

XREFS:

PLOT CONFIG:

LEGEND

1234 EXISTING TREE TO BE PRESERVED

1234 EXISTING TREE TO BE REMOVED

PROTECTIVE FENCING

MATCHLINE - SHEET 9

0 15' 30' 60' 90'
SCALE: 1"=30'

NORTH

GARY R. WEBER ASSOCIATES, INC.
LAND PLANNING
ECOLOGICAL CONSULTING
LANDSCAPE ARCHITECTURE
402 W. LIBERTY DRIVE
WHEATON, ILLINOIS 60187
PHONE: 630-668-7197
www.grwainc.com

CLIENT
M/I HOMES
2135 CITY GATE LANE, SUITE 620
NAPERVILLE, IL 60563

ENGINEER
CAGE
2200 CABOT DRIVE
SUITE 325
LISLE, IL 60532

NORTHWOODS OF NAPERVILLE

NAPERVILLE, ILLINOIS

TREE PRESERVATION PLAN

REVISIONS	
03	07.07.2025
02	06.20.2025
01	05.23.2025

DATE	04.04.2025
PROJECT NO.	MI24251
DRAWN	AJG/CLE
CHECKED	DHS
SHEET NO.	

Know what's below. Call before you dig.

XREFS:

PLOT CONFIG:

EXHIBIT G

TAG NO.	SCIENTIFIC NAME	COMMON NAME	DBH (inches)	CONDITION	STRUCTURE	HEALTH	PROPOSED ACTION	NOTES
676	*Ulmus americana*	American Elm	8	4 - Fair/Poor	Unbalanced, Crown Lean, Broken Limb		Remove	Conflict with proposed development
677	*Acer saccharum*	Sugar Maple	14	4 - Fair/Poor	Unbalanced, Crown Lean		Remove	Conflict with proposed development
678	*Ulmus americana*	American Elm	14	4 - Fair/Poor	Crown Lean	Adventitious Growth, root girdle	Remove	Conflict with proposed development
679	*Ulmus americana*	American Elm	14	4 - Fair/Poor	Unbalanced, Crown Lean		Remove	Conflict with proposed development
680	*Acer saccharum*	Sugar Maple	4	2 - Good			Remove	Conflict with proposed development
681	*Ulmus americana*	American Elm	9	6 - Dead			Remove	Conflict with proposed development
682	*Quercus alba*	White Oak	22	2 - Good			Remove	Conflict with proposed development
683	*Pinus strobus*	White Pine	10	6 - Dead			Remove	Conflict with proposed development
684	*Acer ginnala*	Amur Maple	3x7	4 - Fair/Poor	Multi Leader		Remove	Conflict with proposed development
685	*Acer ginnala*	Amur Maple	4,3,3,2	4 - Fair/Poor			Remove	Conflict with proposed development
686	*Acer ginnala*	Amur Maple	3x3	4 - Fair/Poor			Remove	Conflict with proposed development
687	*Acer ginnala*	Amur Maple	5,4,3x4	4 - Fair/Poor			Remove	Conflict with proposed development
688	*Acer spp.*	Maple Cultivar	11	2 - Good			Remove	Conflict with proposed development
689	*Acer spp.*	Maple Cultivar	9	4 - Fair/Poor	Unbalanced	Trunk Damage, Peeling Bark	Remove	Conflict with proposed development
690	*Acer spp.*	Maple Cultivar	12	2 - Good			Remove	Conflict with proposed development
691	*Acer spp.*	Maple Cultivar	10	3 - Fair	Crowded		Remove	Conflict with proposed development
692	*Acer ginnala*	Amur Maple	6,4	4 - Fair/Poor		Cavity	Remove	Conflict with proposed development
693	*Pinus strobus*	White Pine	12	3 - Fair		Sparse foliage	Remove	Conflict with proposed development
694	*Pinus strobus*	White Pine	11	3 - Fair		Sparse foliage	Remove	Conflict with proposed development
695	*Carya ovata*	Shagbark Hickory	19	5 - Poor	Broken Leader		Remove	Conflict with proposed development
696	*Carya ovata*	Shagbark Hickory	15	3 - Fair	Crown Lean		Remove	Conflict with proposed development
697	*Acer saccharum*	Sugar Maple	8	3 - Fair	Crowded		Remove	Conflict with proposed development
698	*Acer saccharum*	Sugar Maple	8	3 - Fair	Unbalanced		Remove	Conflict with proposed development
699	*Pyrus calleryana*	Pear	8	5 - Poor			Remove	Conflict with proposed development
700	*Pyrus calleryana*	Pear	10	5 - Poor			Remove	Conflict with proposed development
701	*Ulmus rubra*	slipperyelm	17	3 - Fair		20% dead wood	Remove	Impact to critical root zone
702	*Ulmus americana*	American Elm	10	3 - Fair	Crowded		Remove	Conflict with proposed development
703	*Acer saccharum*	Sugar Maple	8,8	3 - Fair	V-shaped joint, Double Leader		Remove	Conflict with proposed development
704	*Acer saccharum*	Sugar Maple	8	2 - Good			Remove	Conflict with proposed development
705	*Quercus alba*	White Oak	16	2 - Good			Remove	Conflict with proposed development
706	*Acer saccharum*	Sugar Maple	16	5 - Poor		30% dead wood, Sparse foliage , Discoloration	Preserve	Poor condition, Within limits of Preservation Covenant
707	*Ostrya virginiana*	Ironwood	7	3 - Fair	Crown Lean		Preserve	No impact
708	*Ostrya virginiana*	Ironwood	5	4 - Fair/Poor		Cavity	Preserve	No impact
709	*Ostrya virginiana*	Ironwood	6	3 - Fair	Unbalanced		Preserve	No impact
710	*Ostrya virginiana*	Ironwood	4	2 - Good			Preserve	Potential impact, Within limits of Preservation Covenant
711	*Ostrya virginiana*	Ironwood	8,3	3 - Fair	Fused Leaders		Preserve	No impact
712	*Pinus strobus*	White Pine	14	3 - Fair	Unbalanced		Preserve	Potential impact, Within limits of Preservation Covenant
713	*Ostrya virginiana*	Ironwood	7	2 - Good			Preserve	No impact
714	*Quercus alba*	White Oak	20	2 - Good	Crown Lean		Preserve	No impact
715	*Acer saccharum*	Sugar Maple	9	2 - Good			Preserve	No impact
716	*Acer saccharum*	Sugar Maple	9	3 - Fair		Sparse foliage	Preserve	No impact
717	*Acer saccharum*	Sugar Maple	7	2 - Good			Preserve	No impact
718	*Quercus alba*	White Oak	31	3 - Fair	Crown Lean		Preserve	No impact
719	*Acer saccharum*	Sugar Maple	22	5 - Poor		Dead Leader, Cavity, Peeling Bark	Preserve	No impact
720	*Acer saccharum*	Sugar Maple	7	4 - Fair/Poor	Unbalanced, Crown Lean		Preserve	No impact
721	*Acer saccharum*	Sugar Maple	6	3 - Fair	Unbalanced		Preserve	No impact
722	*Quercus alba*	White Oak	27	2 - Good	Crown Lean		Preserve	No impact
723	*Quercus alba*	White Oak	23	2 - Good			Preserve	No impact
724	*Acer saccharum*	Sugar Maple	4	4 - Fair/Poor	Fused Leaders, Crowded	Dead Limbs	Preserve	No impact
725	*Acer saccharum*	Sugar Maple	7	2 - Good			Preserve	No impact
726	*Acer saccharum*	Sugar Maple	7	2 - Good			Preserve	No impact
727	*Unknown*	Unknown	7	6 - Dead			Preserve	No impact
728	*Acer saccharum*	Sugar Maple	8	2 - Good			Preserve	No impact
729	*Ostrya virginiana*	Ironwood	6	2 - Good			Preserve	No impact
730	*Quercus rubra*	Red Oak	50	3 - Fair		Tip die-back	Preserve	No impact
731	*Acer saccharum*	Sugar Maple	6	2 - Good			Preserve	No impact
732	*Acer saccharum*	Sugar Maple	7	2 - Good			Preserve	No impact
733	*Acer saccharum*	Sugar Maple	5	5 - Poor	Strong lean	Cavity, Trunk Damage	Preserve	No impact
734	*Ostrya virginiana*	Ironwood	8	2 - Good			Preserve	No impact
735	*Acer saccharum*	Sugar Maple	4	2 - Good			Preserve	No impact
736	*Acer saccharum*	Sugar Maple	7	3 - Fair	poor form		Preserve	No impact
737	*Acer saccharum*	Sugar Maple	11	2 - Good			Preserve	No impact
738	*Acer saccharum*	Sugar Maple	5	2 - Good			Preserve	No impact
739	*Acer saccharum*	Sugar Maple	5	2 - Good			Preserve	No impact
740	*Acer saccharum*	Sugar Maple	13	2 - Good			Preserve	No impact
741	*Ostrya virginiana*	Ironwood	4	2 - Good			Preserve	No impact
742	*Acer saccharum*	Sugar Maple	7	2 - Good			Preserve	No impact
743	*Acer saccharum*	Sugar Maple	6	2 - Good			Preserve	No impact
744	*Acer saccharum*	Sugar Maple	10	3 - Fair		30% dead wood	Preserve	No impact
745	*Acer saccharum*	Sugar Maple	6	3 - Fair		Sparse foliage	Preserve	Potential impact, Within limits of Preservation Covenant
746	*Acer saccharum*	Sugar Maple	11	2 - Good			Preserve	Potential impact, Within limits of Preservation Covenant
747	*Celtis occidentalis*	Hackberry	5	3 - Fair		Adventitious Growth	Preserve	Potential impact, Within limits of Preservation Covenant
748	*Unknown*	Unknown	9	6 - Dead			Preserve	Dead, Within limits of Preservation Covenant
749	*Acer saccharum*	Sugar Maple	8	2 - Good			Preserve	Potential impact, Within limits of Preservation Covenant
750	*Acer saccharum*	Sugar Maple	10	3 - Fair	Unbalanced		Preserve	Potential impact, Within limits of Preservation Covenant
751	*Ostrya virginiana*	Ironwood	5	2 - Good			Preserve	Potential impact, Within limits of Preservation Covenant
752	*Acer saccharum*	Sugar Maple	8	3 - Fair	Lean		Preserve	Potential impact, Within limits of Preservation Covenant
753	*Acer saccharum*	Sugar Maple	10	2 - Good			Preserve	No impact
754	*Acer saccharum*	Sugar Maple	6	2 - Good			Preserve	No impact
755	*Unknown*	Unknown	7	6 - Dead			Preserve	No impact
756	*Acer saccharum*	Sugar Maple	4	2 - Good			Preserve	No impact
757	*Acer saccharum*	Sugar Maple	6	2 - Good			Preserve	No impact
758	*Acer saccharum*	Sugar Maple	4	2 - Good			Preserve	No impact
759	*Acer saccharum*	Sugar Maple	5	2 - Good			Preserve	No impact
760	*Acer saccharum*	Sugar Maple	8	2 - Good			Preserve	No impact
761	*Acer saccharum*	Sugar Maple	7	2 - Good			Preserve	No impact
762	*Quercus alba*	White Oak	26	4 - Fair/Poor		30% dead wood, Tip die-back	Preserve	No impact
763	*Ulmus americana*	American Elm	10	2 - Good			Preserve	No impact
764	*Ulmus americana*	American Elm	8	3 - Fair	Strong lean		Preserve	No impact
765	*Ulmus americana*	American Elm	9	5 - Poor		50% dead wood, Hollow, Adventitious Growth	Preserve	No impact
766	*Acer saccharum*	Sugar Maple	5	2 - Good			Preserve	No impact
767	*Acer saccharum*	Sugar Maple	5	3 - Fair	Crowded		Preserve	No impact
768	*Quercus alba*	White Oak	32	2 - Good			Preserve	No impact
769	*Acer saccharum*	Sugar Maple	4	4 - Fair/Poor	poor form		Preserve	No impact
770	*Acer saccharum*	Sugar Maple	6	2 - Good			Preserve	No impact
771	*Acer saccharum*	Sugar Maple	4	3 - Fair	Unbalanced		Preserve	No impact
772	*Acer saccharum*	Sugar Maple	6	2 - Good			Preserve	No impact
773	*Acer saccharum*	Sugar Maple	8	2 - Good			Preserve	No impact
774	*Juglans nigra*	Black Walnut	25	2 - Good			Preserve	No impact
775	*Acer saccharum*	Sugar Maple	8	2 - Good			Preserve	No impact
776	*Acer saccharum*	Sugar Maple	6	3 - Fair	Lean		Preserve	No impact
777	*Acer saccharum*	Sugar Maple	8	3 - Fair	Crowded		Preserve	No impact
778	*Acer saccharum*	Sugar Maple	7	2 - Good			Preserve	No impact
779	*Acer saccharum*	Sugar Maple	4	2 - Good			Preserve	No impact
780	*Acer saccharum*	Sugar Maple	8	2 - Good			Preserve	No impact
781	*Acer saccharum*	Sugar Maple	7	2 - Good			Preserve	No impact
782	*Unknown*	Unknown	18	6 - Dead			Preserve	No impact
783	*Acer saccharum*	Sugar Maple	4	3 - Fair		Adventitious Growth	Preserve	No impact
784	*Acer saccharum*	Sugar Maple	8	2 - Good			Preserve	No impact
785	*Quercus alba*	White Oak	34	2 - Good			Preserve	No impact
786	*Acer saccharum*	Sugar Maple	5	2 - Good		Adventitious Growth	Preserve	No impact
787	*Ulmus americana*	American Elm	10	2 - Good			Preserve	No impact
788	*Ulmus americana*	American Elm	15	2 - Good			Preserve	No impact
789	*Prunus serotina*	Black Cherry	5	3 - Fair	Lean		Preserve	No impact
790	*Acer saccharum*	Sugar Maple	4	2 - Good			Preserve	No impact
791	*Acer saccharum*	Sugar Maple	6	2 - Good			Preserve	No impact
792	*Quercus alba*	White Oak	34	2 - Good			Remove	Impact to critical root zone
793	*Quercus alba*	White Oak	24	2 - Good			Remove	Impact to critical root zone
794	*Ulmus americana*	American Elm	11	2 - Good			Preserve	High quality tree near proposed impacts
795	*Acer saccharum*	Sugar Maple	4	2 - Good			Preserve	No impact
796	*Acer saccharum*	Sugar Maple	4	2 - Good			Preserve	No impact
797	*Quercus alba*	White Oak	33	3 - Fair	Crown Lean		Preserve	No impact
798	*Unknown*	Unknown	16	6 - Dead			Preserve	No impact
799	*Acer saccharinum*	Silver Maple	6	2 - Good			Remove	Dead
800	*Quercus alba*	White Oak	17	3 - Fair	Crown Lean		Preserve	High quality tree near proposed impacts
801	*Acer saccharum*	Sugar Maple	5	2 - Good			Remove	Impact to critical root zone
802	*Acer saccharum*	Sugar Maple	4	4 - Fair/Poor	Lean, Unbalanced		Remove	Impact to critical root zone

TAG NO.	SCIENTIFIC NAME	COMMON NAME	DBH (inches)	CONDITION	STRUCTURE	HEALTH	PROPOSED ACTION	NOTES
803	*Quercus alba*	White Oak	19	2 - Good	Crown Lean		Remove	Impact to critical root zone
804	*Quercus alba*	White Oak	23	3 - Fair		Adventitious Growth	Remove	Impact to critical root zone
805	*Prunus serotina*	Black Cherry	8	3 - Fair	poor form		Remove	Impact to critical root zone
806	*Acer saccharum*	Sugar Maple	7	2 - Good			Remove	Impact to critical root zone
807	*Quercus alba*	White Oak	28	3 - Fair	Crown Lean		Preserve	High quality tree near proposed impacts
808	*Acer saccharum*	Sugar Maple	6	2 - Good			Preserve	No impact
809	*Ulmus americana*	American Elm	6	4 - Fair/Poor	Strong lean, Unbalanced		Preserve	No impact
810	*Acer saccharum*	Sugar Maple	7	2 - Good			Preserve	No impact
811	*Carya ovata*	Shagbark Hickory	24	4 - Fair/Poor	Strong lean		Preserve	No impact
812	*Acer saccharum*	Sugar Maple	9	2 - Good			Preserve	No impact
813	*Ulmus americana*	American Elm	9	6 - Dead			Remove	Dead
814	*Acer saccharum*	Sugar Maple	6	2 - Good			Preserve	Potential impact
815	*Acer saccharum*	Sugar Maple	7	5 - Poor	Broken Leader		Remove	Poor condition
816	*Acer saccharum*	Sugar Maple	7	4 - Fair/Poor	Crowded		Remove	Impact to critical root zone
817	*Acer saccharum*	Sugar Maple	6	5 - Poor	Crowded, Broken Leader		Remove	Poor condition
818	*Ulmus americana*	American Elm	6	4 - Fair/Poor	Strong lean		Remove	Conflict with proposed development
819	*Quercus alba*	White Oak	35	3 - Fair		Adventitious Growth, Tip die-back	Remove	Conflict with proposed development
820	*Quercus alba*	White Oak	22	2 - Good			Remove	Conflict with proposed development
821	*Quercus alba*	White Oak	18	2 - Good			Remove	Conflict with proposed development
822	*Acer saccharum*	Sugar Maple	19	2 - Good			Preserve	No impact
823	*Carya ovata*	Shagbark Hickory	14	2 - Good			Preserve	No impact
824	*Acer saccharum*	Sugar Maple	5	2 - Good			Preserve	No impact
825	*Acer saccharum*	Sugar Maple	6	3 - Fair	Crowded		Preserve	No impact
826	*Ulmus americana*	American Elm	6	4 - Fair/Poor		Adventitious Growth, Sparse foliage	Preserve	No impact
827	*Prunus serotina*	Black Cherry	7	2 - Good			Remove	Conflict with proposed development
828	*Quercus alba*	White Oak	23	2 - Good			Remove	Conflict with proposed development
829	*Prunus serotina*	Black Cherry	7	2 - Good			Remove	Low quality species
830	*Carya ovata*	Shagbark Hickory	19	2 - Good			Remove	Conflict with proposed development
831	*Acer saccharum*	Sugar Maple	8	2 - Good			Remove	Conflict with proposed development
832	*Ulmus americana*	American Elm	7	2 - Good			Remove	Conflict with proposed development
833	*Celtis occidentalis*	Hackberry	6	2 - Good			Remove	Conflict with proposed development
834	*Celtis occidentalis*	Hackberry	5	2 - Good			Remove	Conflict with proposed development
835	*Juglans nigra*	Black Walnut	14	2 - Good			Remove	Conflict with proposed development
836	*Prunus serotina*	Black Cherry	11	4 - Fair/Poor		20% dead wood, Dead Limbs	Remove	Conflict with proposed development
837	*Quercus alba*	White Oak	14	2 - Good			Remove	Conflict with proposed development
838	*Juglans nigra*	Black Walnut	7	4 - Fair/Poor	U-shaped joint, Crown Lean		Remove	Conflict with proposed development
839	*Ulmus americana*	American Elm	9	2 - Good			Remove	Conflict with proposed development
840	*Acer saccharum*	Sugar Maple	6	2 - Good			Remove	Conflict with proposed development
841	*Quercus alba*	White Oak	28	2 - Good		Dead Limbs	Remove	Conflict with proposed development
842	*Ulmus americana*	American Elm	4	5 - Poor	Strong lean, Crown Lean		Remove	Conflict with proposed development
843	*Acer saccharum*	Sugar Maple	6	2 - Good			Remove	Conflict with proposed development
844	*Quercus alba*	White Oak	20	3 - Fair	Crown Lean		Remove	Conflict with proposed development
845	*Quercus alba*	White Oak	30	3 - Fair	Crown Lean		Remove	Conflict with proposed development
846	*Ulmus americana*	American Elm	13	5 - Poor	Strong lean	50% dead wood	Remove	Conflict with proposed development
847	*Tilia americana*	American Basswood	15,13,5,5	4 - Fair/Poor	U-shaped joint		Remove	Conflict with proposed development
848	*Ulmus americana*	American Elm	5	5 - Poor	Strong lean, Crown Lean		Remove	Conflict with proposed development
849	*Ulmus americana*	American Elm	5	5 - Poor	Strong lean, Crown Lean		Remove	Conflict with proposed development
850	*Ulmus americana*	American Elm	15	5 - Poor	Strong lean, Unbalanced, Crown Lean		Remove	Conflict with proposed development
851	*Carya cordiformis*	Bitternut Hickory	9	2 - Good			Remove	Conflict with proposed development
852	*Quercus alba*	White Oak	14	2 - Good			Remove	Conflict with proposed development
853	*Tilia americana*	American Basswood	7,10	4 - Fair/Poor	U-shaped joint	Trunk Damage	Remove	Conflict with proposed development
854	*Tilia americana*	American Basswood	4	2 - Good			Remove	Conflict with proposed development
855	*Carya ovata*	Shagbark Hickory	8	2 - Good			Remove	Conflict with proposed development
856	*Juglans nigra*	Black Walnut	6	3 - Fair	Lean		Remove	Conflict with proposed development
857	*Tilia americana*	American Basswood	15	5 - Poor		Hollow, Adventitious Growth	Remove	Conflict with proposed development
858	*Tilia americana*	American Basswood	5	3 - Fair	Crowded		Remove	Conflict with proposed development
859	*Tilia americana*	American Basswood	14	2 - Good			Remove	Impact to critical root zone
860	*Tilia americana*	American Basswood	6	2 - Good			Remove	Impact to critical root zone
861	*Tilia americana*	American Basswood	13	3 - Fair	Lean		Remove	Impact to critical root zone
862	*Tilia americana*	American Basswood	8,7	5 - Poor	V-shaped joint, Split Risk	Cavity	Remove	Impact to critical root zone
863	*Tilia americana*	American Basswood	5	2 - Good			Remove	Conflict with proposed development
864	*Carya cordiformis*	Bitternut Hickory	8	2 - Good			Remove	Conflict with proposed development
865	*Unknown*	Unknown	9	6 - Dead		Vines	Remove	Dead
866	*Carya ovata*	Shagbark Hickory	5	3 - Fair	Unbalanced		Remove	Conflict with proposed development
867	*Carya ovata*	Shagbark Hickory	7	2 - Good			Remove	Conflict with proposed development
868	*Carya cordiformis*	Bitternut Hickory	11	2 - Good			Remove	Conflict with proposed development
869	*Carya ovata*	Shagbark Hickory	10	2 - Good			Remove	Conflict with proposed development
870	*Carya cordiformis*	Bitternut Hickory	12	2 - Good			Remove	Conflict with proposed development
871	*Unknown*	Unknown	15	6 - Dead			Remove	Conflict with proposed development
872	*Juglans nigra*	Black Walnut	7	2 - Good			Remove	Conflict with proposed development
873	*Juglans nigra*	Black Walnut	11	2 - Good			Remove	Conflict with proposed development
874	*Fraxinus spp.*	Ash	7	3 - Fair	Unbalanced		Remove	Conflict with proposed development
875	*Juglans nigra*	Black Walnut	10	2 - Good			Remove	Conflict with proposed development
876	*Carya ovata*	Shagbark Hickory	5	2 - Good			Remove	Conflict with proposed development
877	*Fraxinus spp.*	Ash	12	6 - Dead			Remove	Dead
878	*Juglans nigra*	Black Walnut	7	3 - Fair		Dead Limbs	Preserve	Potential impact, Within limits of Preservation Covenant
879	*Carya cordiformis*	Bitternut Hickory	5	2 - Good			Remove	Conflict with proposed development
880	*Juglans nigra*	Black Walnut	6	2 - Good			Remove	Conflict with proposed development
881	*Populus deltoides*	Eastern Cottonwood	7	4 - Fair/Poor		30% dead wood, Dead Limbs	Remove	Impact to critical root zone
882	*Pyrus calleryana*	Pear	6	5 - Poor			Remove	Impact to critical root zone
883	*Juglans nigra*	Black Walnut	6	2 - Good			Remove	Impact to critical root zone
884	*Juglans nigra*	Black Walnut	6	2 - Good			Remove	Impact to critical root zone
885	*Juglans nigra*	Black Walnut	6	2 - Good			Remove	Conflict with proposed development
886	*Pyrus calleryana*	Pear	5	5 - Poor			Remove	Impact to critical root zone
887	*Juglans nigra*	Black Walnut	4	2 - Good			Remove	Impact to critical root zone
888	*Populus deltoides*	Eastern Cottonwood	9	4 - Fair/Poor		30% dead wood, Dead Limbs	Remove	Impact to critical root zone
889	*Fraxinus spp.*	Ash	7	5 - Poor			Remove	Conflict with proposed development
890	*Juglans nigra*	Black Walnut	6,5	3 - Fair		Dead Limbs	Remove	Conflict with proposed development
891	*Fraxinus spp.*	Ash	5	5 - Poor			Remove	Conflict with proposed development
892	*Ulmus americana*	American Elm	6	2 - Good			Remove	Conflict with proposed development
893	*Fraxinus spp.*	Ash	7,6	4 - Fair/Poor	V-shaped joint, Split Risk		Remove	Conflict with proposed development
894	*Juglans nigra*	Black Walnut	6	2 - Good			Remove	Conflict with proposed development
895	*Fraxinus spp.*	Ash	6	3 - Fair			Remove	Conflict with proposed development
2201	*Crataegus spp.*	Hawthorn	13,10,8	4 - Fair/Poor	V-shaped joint, Multi Leader, Split Risk	Cavity	Preserve	Off-site
2202	*Crataegus spp.*	Hawthorn	10,6,6,6,4	4 - Fair/Poor	V-shaped joint, Multi Leader, Split Risk	20% dead wood	Preserve	Off-site
2203	*Crataegus spp.*	Hawthorn	12,8,3	4 - Fair/Poor	Multi Leader, Fused Leaders	20% dead wood, Cavity	Preserve	Off-site
2204	*Carya ovata*	Shagbark Hickory	6	3 - Fair	Crown Lean	10% dead wood	Preserve	Off-site
2205	*Quercus alba*	White Oak	7	2 - Good			Preserve	Off-site
2206	*Picea abies*	Norway Spruce	4	2 - Good			Preserve	Off-site
2207	*Picea abies*	Norway Spruce	6	2 - Good			Preserve	Off-site
2208	*Picea abies*	Norway Spruce	4	2 - Good			Preserve	Off-site
2209	*Gleditsia triacanthos*	Honey Locust	8	2 - Good	Unbalanced		Preserve	Off-site
2210	*Gleditsia triacanthos*	Honey Locust	4	3 - Fair	Lean	Trunk Scar	Preserve	Off-site
2211	*Acer spp.*	Maple Cultivar	6	2 - Good			Preserve	Off-site
2212	*Acer spp.*	Maple Cultivar	5	3 - Fair		30% dead wood	Preserve	Off-site
2213	*Unknown*	Unknown	9,7	6 - Dead			Preserve	Off-site
2214	*Juglans nigra*	Black Walnut	16	4 - Fair/Poor	Lean, Crown Lean, Broken Limb		Preserve	Off-site
2215	*Juglans nigra*	Black Walnut	25	4 - Fair/Poor	Unbalanced	Cavity, Sparse Foliage	Preserve	Off-site
2216	*Ulmus americana*	American Elm	7	3 - Fair	Unbalanced, Crown Lean		Preserve	No impact
2217	*Quercus rubra*	Red Oak	19	2 - Good	Lean, Unbalanced		Preserve	No impact
2218	*Carya ovata*	Shagbark Hickory	10	2 - Good	Lean, Unbalanced		Preserve	Off-site
2219	*Quercus rubra*	Red Oak	16	2 - Good			Preserve	Off-site
2220	*Quercus rubra*	Red Oak	12	2 - Good			Preserve	Off-site
2221	*Ostrya virginiana*	Ironwood	6	2 - Good			Preserve	Off-site
2222	*Quercus rubra*	Red Oak	18	2 - Good	Lean, Unbalanced		Preserve	Off-site
2223	*Quercus rubra*	Red Oak	22	2 - Good	Lean	10% dead wood	Preserve	No impact
2224	*Quercus rubra*	Red Oak	8	2 - Good			Preserve	No impact
2225	*Acer saccharum*	Sugar Maple	7	2 - Good			Preserve	No impact
2226	*Quercus rubra*	Red Oak	10	2 - Good			Preserve	Off-site
2227	*Ulmus americana*	American Elm	11,8	4 - Fair/Poor	V-shaped joint, Double Leader, Split Risk, Lean		Preserve	No impact
2228	*Quercus rubra*	Red Oak	16	2 - Good		20% dead wood	Preserve	No impact
2229	*Quercus rubra*	Red Oak	14	3 - Fair	Lean, Unbalanced	10% dead wood	Preserve	Off-site
2230	*Prunus serotina*	Black Cherry	6	4 - Fair/Poor	Lean, Crown Lean, Crowded		Preserve	Off-site
2231	*Ulmus americana*	American Elm	9	3 - Fair	Lean, Unbalanced, Crowded		Preserve	Off-site
2232	*Acer saccharum*	Sugar Maple	14	2 - Good	Unbalanced		Remove	Conflict with proposed development
2233	*Prunus serotina*	Black Cherry	7	4 - Fair/Poor	Lean, Crown Lean, Crowded		Remove	Impact to critical root zone
2234	*Acer saccharum*	Sugar Maple	11	2 - Good			Remove	Impact to critical root zone

EXHIBIT G

GRWA
GARY R. WEBER ASSOCIATES, INC.
LAND PLANNING
ECOLOGICAL CONSULTING
LANDSCAPE ARCHITECTURE
402 W. LIBERTY DRIVE
WHEATON, ILLINOIS 60187
PHONE: 630-668-7197
www.grwainc.com

CLIENT
M/I HOMES
2135 CITY GATE LANE, SUITE 620
NAPERVILLE, IL 60563

ENGINEER
CAGE
2200 CABOT DRIVE
SUITE 325
LISLE, IL 60532

NORTHWOODS OF NAPERVILLE

NAPERVILLE, ILLINOIS

TREE INVENTORY

REVISIONS	
03	07.07.2025
02	06.20.2025
01	05.23.2025

DATE	04.04.2025
PROJECT NO.	MI24251
DRAWN	AJG/CLE
CHECKED	DHS
SHEET NO.	10 OF 14

811 Know what's below. Call before you dig.

XREFS:

PLOT CONFIG:

TAG NO.	SCIENTIFIC NAME	COMMON NAME	DBH (inches)	CONDITION	STRUCTURE	HEALTH	PROPOSED ACTION	NOTES
2235	Carya ovata	Shagbark Hickory	23	4 - Fair/Poor	Crown Lean	20% dead wood, Dead Limbs	Remove	Impact to critical root zone
2236	Carya ovata	Shagbark Hickory	14	2 - Good			Remove	Impact to critical root zone
2237	Quercus alba	White Oak	34	2 - Good	Lean		Preserve	No impact
2238	Acer saccharum	Sugar Maple	5	2 - Good			Preserve	No impact
2239	Ulmus americana	American Elm	9	4 - Fair/Poor	Crown Lean	30% dead wood	Remove	Impact to critical root zone
2240	Acer saccharum	Sugar Maple	5	3 - Fair	Unbalanced, Crowded		Remove	Impact to critical root zone
2241	Acer saccharum	Sugar Maple	6,2	4 - Fair/Poor	V-shaped joint, Double Leader, Split Risk		Remove	Impact to critical root zone
2242	Prunus serotina	Black Cherry	4	5 - Poor	Strong lean	20% dead wood	Remove	Impact to critical root zone
2243	Quercus rubra	Red Oak	20	2 - Good	Lean		Remove	Impact to critical root zone
2244	Acer saccharum	Sugar Maple	4	2 - Good			Preserve	No impact
2245	Carya ovata	Shagbark Hickory	17	3 - Fair	Unbalanced	10% dead wood	Remove	Conflict with proposed development
2246	Carya ovata	Shagbark Hickory	14	2 - Good	Crown Lean		Remove	Impact to critical root zone
2247	Ulmus americana	American Elm	7	3 - Fair	Crown Lean	10% dead wood	Preserve	No impact
2248	Ulmus americana	American Elm	6	3 - Fair	Crown Lean	20% dead wood	Preserve	No impact
2249	Acer saccharum	Sugar Maple	6	2 - Good			Preserve	No impact
2250	Acer saccharum	Sugar Maple	7	2 - Good	Unbalanced		Remove	Impact to critical root zone
2251	Quercus alba	White Oak	25	2 - Good	Unbalanced		Remove	Impact to critical root zone
2252	Acer saccharum	Sugar Maple	4	2 - Good	Unbalanced		Remove	Impact to critical root zone
2253	Acer saccharum	Sugar Maple	6	2 - Good	Unbalanced		Preserve	No impact
2254	Acer saccharum	Sugar Maple	6	2 - Good	Crown Lean		Preserve	No impact
2255	Quercus alba	White Oak	18	2 - Good	Crown Lean		Preserve	No impact
2256	Quercus alba	White Oak	27	2 - Good		10% dead wood	Preserve	No impact
2257	Quercus alba	White Oak	34	2 - Good		10% dead wood	Remove	Impact to critical root zone
2258	Ulmus americana	American Elm	7	5 - Poor		>50% dead wood	Remove	Impact to critical root zone
2259	Ulmus americana	American Elm	8	4 - Fair/Poor	Crown Lean	20% dead wood	Preserve	No impact
2260	Ulmus americana	American Elm	7	4 - Fair/Poor	Lean	30% dead wood	Preserve	No impact
2261	Acer saccharum	Sugar Maple	4	2 - Good			Preserve	No impact
2262	Ulmus americana	American Elm	8	4 - Fair/Poor		40% dead wood, Trunk Scar	Remove	Impact to critical root zone
2263	Unknown	Unknown	8	6 - Dead			Preserve	No impact
2264	Carya ovata	Shagbark Hickory	27	2 - Good			Preserve	No impact
2265	Ulmus americana	American Elm	6	3 - Fair	Unbalanced	20% dead wood	Preserve	No impact
2266	Carya ovata	Shagbark Hickory	16	2 - Good	Lean		Remove	Impact to critical root zone
2267	Ulmus americana	American Elm	7	4 - Fair/Poor	Crown Lean	30% dead wood	Preserve	Potential impact
2268	Carya ovata	Shagbark Hickory	22	3 - Fair	Lean, Crown Lean		Remove	Impact to critical root zone
2269	Ulmus americana	American Elm	7	4 - Fair/Poor	Crown Lean	30% dead wood	Remove	Impact to critical root zone
2270	Juglans nigra	Black Walnut	9	4 - Fair/Poor	Crown Lean, Crowded	Vines	Remove	Impact to critical root zone
2271	Ulmus americana	American Elm	10	3 - Fair			Remove	Conflict with proposed development
2272	Ulmus americana	American Elm	7	3 - Fair	Unbalanced		Preserve	No impact
2273	Ulmus americana	American Elm	7	4 - Fair/Poor	Lean, Crown Lean	20% dead wood	Preserve	No impact
2274	Ulmus americana	American Elm	5	5 - Poor	Lean	50% dead wood	Preserve	No impact
2275	Ulmus americana	American Elm	6	6 - Dead			Preserve	No impact
2276	Ulmus americana	American Elm	17	5 - Poor	Crown Lean	>50% dead wood	Remove	Conflict with proposed development
2277	Carya ovata	Shagbark Hickory	26	2 - Good		Fungus-Stem	Remove	Conflict with proposed development
2278	Ulmus americana	American Elm	8	4 - Fair/Poor	Crown Lean	30% dead wood	Remove	Impact to critical root zone
2279	Ulmus americana	American Elm	4	4 - Fair/Poor		40% dead wood	Preserve	No impact
2280	Ulmus americana	American Elm	4	4 - Fair/Poor	Unbalanced	30% dead wood	Preserve	No impact
2281	Ulmus americana	American Elm	12	3 - Fair	Crown Lean		Remove	Conflict with proposed development
2282	Ulmus americana	American Elm	8	3 - Fair		Girdling Root	Preserve	No impact
2283	Acer saccharum	Sugar Maple	10	3 - Fair		Trunk Scar	Preserve	No impact
2284	Quercus rubra	Red Oak	10	2 - Good	Lean		Preserve	No impact
2285	Carya ovata	Shagbark Hickory	19	2 - Good			Preserve	High quality tree near proposed impacts
2286	Ulmus americana	American Elm	7	3 - Fair	Crown Lean		Remove	Conflict with proposed development
2287	Ulmus americana	American Elm	10	3 - Fair	Lean		Remove	Conflict with proposed development
2288	Quercus alba	White Oak	19	2 - Good			Remove	Impact to critical root zone
2289	Ostrya virginiana	Ironwood	4	2 - Good			Remove	Impact to critical root zone
2290	Ulmus americana	American Elm	6	3 - Fair	Lean, Unbalanced		Remove	Impact to critical root zone
2291	Quercus rubra	Red Oak	11	2 - Good			Preserve	High quality tree near proposed impacts
2292	Acer saccharum	Sugar Maple	8	2 - Good	Lean		Preserve	High quality tree near proposed impacts
2293	Acer saccharum	Sugar Maple	8	2 - Good			Preserve	High quality tree near proposed impacts
2294	Ulmus americana	American Elm	18	3 - Fair	Unbalanced, Crown Lean	10% dead wood	Remove	Impact to critical root zone
2295	Ulmus americana	American Elm	11	2 - Good		10% dead wood	Preserve	High quality tree near proposed impacts
2296	Ulmus americana	American Elm	8	2 - Good	Crown Lean		Preserve	High quality tree near proposed impacts
2297	Ulmus americana	American Elm	13	6 - Dead			Remove	Dead
2298	Ulmus americana	American Elm	13	6 - Dead			Remove	Conflict with proposed development
2299	Morus alba	White Mulberry	4	3 - Fair	Lean		Remove	Impact to critical root zone
2300	Morus alba	White Mulberry	6	4 - Fair/Poor	Lean, Crown Lean, Crowded		Remove	Impact to critical root zone
2301	Ulmus americana	American Elm	6	4 - Fair/Poor	Lean, Crown Lean	10% dead wood	Preserve	No impact
2302	Ulmus americana	American Elm	11	3 - Fair	Unbalanced, Crown Lean		Preserve	No impact
2303	Quercus rubra	Red Oak	33	2 - Good			Preserve	No impact
2304	Acer saccharum	Sugar Maple	15	2 - Good			Preserve	No impact
2305	Carya ovata	Shagbark Hickory	16	2 - Good	Lean		Preserve	No impact
2306	Ulmus americana	American Elm	9	4 - Fair/Poor	Lean, Crown Lean	Vines	Preserve	No impact
2307	Ulmus americana	American Elm	8	6 - Dead			Preserve	No impact
2308	Acer saccharum	Sugar Maple	11	2 - Good	Lean		Preserve	Potential impact
2309	Quercus rubra	Red Oak	11	2 - Good	Lean		Remove	Impact to critical root zone
2310	Ulmus americana	American Elm	7	2 - Good	Lean		Preserve	No impact
2311	Unknown	Unknown	9	6 - Dead			Preserve	No impact
2312	Unknown	Unknown	10	6 - Dead			Preserve	No impact
2313	Morus alba	White Mulberry	7	3 - Fair	Crown Lean		Remove	Low quality species
2314	Ulmus americana	American Elm	16	4 - Fair/Poor	Lean, Crown Lean		Remove	Impact to critical root zone
2315	Ulmus americana	American Elm	7	4 - Fair/Poor	Lean, Crown Lean, Crowded		Remove	Impact to critical root zone
2316	Acer saccharum	Sugar Maple	13	2 - Good			Preserve	Potential impact
2317	Unknown	Unknown	7	6 - Dead			Remove	Dead
2318	Prunus serotina	Black Cherry	8	5 - Poor	Lean, Crown Lean	50% dead wood	Remove	Poor condition
2319	Quercus rubra	Red Oak	29	3 - Fair		Cavity, Trunk Scar	Preserve	No impact
2320	Quercus alba	White Oak	38	2 - Good	Broken Limb		Preserve	Off-site
2321	Acer saccharum	Sugar Maple	8	3 - Fair	Lean, Unbalanced		Preserve	High quality tree near proposed impacts
2322	Quercus rubra	Red Oak	5	2 - Good		10% dead wood	Preserve	Off-site
2323	Carya ovata	Shagbark Hickory	9	4 - Fair/Poor	Lean, Crown Lean, Crowded		Preserve	Off-site
2324	Ulmus americana	American Elm	5	2 - Good	Lean		Preserve	Off-site
2325	Prunus serotina	Black Cherry	10	4 - Fair/Poor	Lean, Unbalanced, Crowded		Preserve	Off-site
2326	Ulmus americana	American Elm	12	4 - Fair/Poor	Lean, Unbalanced	Trunk Damage	Preserve	Off-site
2327	Ulmus americana	American Elm	11	4 - Fair/Poor	Lean, Crown Lean, Crowded		Remove	Impact to critical root zone
2328	Acer saccharum	Sugar Maple	4	4 - Fair/Poor	Unbalanced, Crowded	Trunk Scar	Remove	Impact to critical root zone
2329	Quercus alba	White Oak	38	2 - Good	Broken Limb	10% dead wood	Preserve	High quality tree near proposed impacts
2330	Ulmus americana	American Elm	9	4 - Fair/Poor	Lean, Crown Lean, Crowded		Remove	Impact to critical root zone
2331	Quercus rubra	Red Oak	18	2 - Good	Unbalanced		Preserve	Off-site
2332	Quercus rubra	Red Oak	10	2 - Good	Unbalanced		Preserve	Off-site
2333	Quercus rubra	Red Oak	13	2 - Good			Preserve	Off-site
2334	Quercus rubra	Red Oak	19	2 - Good			Preserve	Off-site
2335	Quercus rubra	Red Oak	20	2 - Good	Lean	Girdling Root	Preserve	Off-site
2336	Quercus rubra	Red Oak	14	2 - Good			Preserve	Off-site
2337	Quercus rubra	Red Oak	13	2 - Good	Unbalanced		Preserve	Off-site
2338	Carya ovata	Shagbark Hickory	9	2 - Good	Lean		Preserve	Off-site
2339	Quercus rubra	Red Oak	13	2 - Good	Lean		Preserve	Off-site
2340	Quercus rubra	Red Oak	16	2 - Good			Preserve	Off-site
2341	Ulmus americana	American Elm	8	2 - Good			Preserve	Off-site
2342	Quercus rubra	Red Oak	20	2 - Good	Lean, Crown Lean		Preserve	Off-site
2343	Quercus rubra	Red Oak	10	2 - Good	Unbalanced		Preserve	Off-site
2344	Fraxinus spp.	Ash	12,9	5 - Poor	V-shaped joint, Double Leader, Split Risk	>50% dead wood, Dead Leader	Remove	Impact to critical root zone
2345	Ulmus americana	American Elm	6	3 - Fair	Lean, Unbalanced		Preserve	Potential impact
2346	Acer saccharum	Sugar Maple	6	3 - Fair		Trunk Scar	Preserve	Off-site
2347	Ulmus americana	American Elm	4	4 - Fair/Poor	Crown Lean, Crowded	Growing in Fence	Remove	Poor condition
2348	Morus alba	White Mulberry	10	4 - Fair/Poor	Lean, Crown Lean	Trunk Damage, Trunk Scar	Remove	Impact to critical root zone
2349	Quercus alba	White Oak	18	6 - Dead			Remove	Dead
2350	Quercus alba	White Oak	16	2 - Good	Lean		Preserve	High quality tree near proposed impacts
2351	Quercus alba	White Oak	17	2 - Good	Lean		Preserve	High quality tree near proposed impacts
2352	Acer saccharum	Sugar Maple	6	2 - Good			Preserve	High quality tree near proposed impacts
2353	Quercus alba	White Oak	17	2 - Good	Unbalanced		Preserve	High quality tree near proposed impacts
2354	Quercus alba	White Oak	21	6 - Dead			Remove	Dead
2355	Acer saccharum	Sugar Maple	10	2 - Good	Lean		Preserve	High quality tree near proposed impacts
2356	Acer saccharum	Sugar Maple	4	2 - Good	Unbalanced		Preserve	High quality tree near proposed impacts
2357	Quercus alba	White Oak	17	6 - Dead			Remove	Dead
2358	Acer saccharum	Sugar Maple	6	2 - Good	Lean, Unbalanced		Preserve	High quality tree near proposed impacts
2359	Quercus alba	White Oak	24	2 - Good	Lean		Preserve	High quality tree near proposed impacts
2360	Acer saccharum	Sugar Maple	4	2 - Good	Crown Lean		Preserve	High quality tree near proposed impacts
2361	Acer saccharum	Sugar Maple	7	2 - Good			Remove	Impact to critical root zone
2362	Quercus alba	White Oak	14	2 - Good	Lean		Preserve	High quality tree near proposed impacts

TAG NO.	SCIENTIFIC NAME	COMMON NAME	DBH (inches)	CONDITION	STRUCTURE	HEALTH	PROPOSED ACTION	NOTES
2363	Quercus alba	White Oak	23	2 - Good			Remove	Conflict with proposed development
2364	Acer saccharum	Sugar Maple	7	2 - Good	Unbalanced		Remove	Impact to critical root zone
2365	Quercus alba	White Oak	26,24	2 - Good	U-shaped joint, Double Leader		Preserve	High quality tree near proposed impacts
2366	Quercus alba	White Oak	26	3 - Fair	Lean, Crown Lean	10% dead wood	Preserve	Off-site
2367	Carya ovata	Shagbark Hickory	10	2 - Good			Preserve	Off-site
2368	Quercus rubra	Red Oak	15	2 - Good	Lean	10% dead wood	Preserve	Off-site
2369	Ulmus americana	American Elm	11	3 - Fair	Unbalanced		Preserve	Off-site
2370	Tilia americana	American Basswood	9	3 - Fair	Unbalanced, Crowded		Preserve	Off-site
2371	Quercus macrocarpa	Bur Oak	34	2 - Good	Crown Lean		Preserve	Off-site
2372	Ulmus americana	American Elm	4	3 - Fair	Crown Lean		Preserve	Off-site
2373	Quercus alba	White Oak	26	2 - Good	Crown Lean		Preserve	Off-site
2374	Acer saccharum	Sugar Maple	5	2 - Good	Unbalanced		Preserve	High quality tree near proposed impacts
2375	Acer saccharum	Sugar Maple	6	2 - Good	Lean, Unbalanced		Remove	Impact to critical root zone
2376	Acer saccharum	Sugar Maple	4	2 - Good			Remove	Impact to critical root zone
2377	Quercus alba	White Oak	26	2 - Good	Crown Lean		Remove	Impact to critical root zone
2378	Acer saccharum	Sugar Maple	4	2 - Good	Lean		Remove	Impact to critical root zone
2379	Quercus alba	White Oak	28	2 - Good			Remove	Conflict with proposed development
2380	Quercus alba	White Oak	20	2 - Good	Crown Lean		Remove	Conflict with proposed development
2381	Acer saccharum	Sugar Maple	6	3 - Fair	Unbalanced	Trunk Scar	Remove	Conflict with proposed development
2382	Ulmus americana	American Elm	6	3 - Fair	Unbalanced, Crown Lean		Remove	Impact to critical root zone
2383	Acer saccharum	Sugar Maple	5	2 - Good			Remove	Impact to critical root zone
2384	Pinus strobus	White Pine	16,50'	3 - Fair	Lean, Unbalanced		Remove	Conflict with proposed development
2385	Pinus strobus	White Pine	14,50'	3 - Fair	Lean, Unbalanced		Remove	Conflict with proposed development
2386	Pinus strobus	White Pine	11,50'	3 - Fair	Lean, Unbalanced		Remove	Conflict with proposed development
2387	Pinus strobus	White Pine	11,40'	3 - Fair	Lean, Unbalanced		Remove	Conflict with proposed development
2388	Quercus alba	White Oak	33	2 - Good	Lean, Crown Lean		Remove	Conflict with proposed development
2389	Quercus alba	White Oak	18	6 - Dead			Remove	Conflict with proposed development
2390	Quercus alba	White Oak	22	2 - Good			Remove	Conflict with proposed development
2391	Quercus alba	White Oak	24	2 - Good	Lean		Remove	Conflict with proposed development
2392	Quercus alba	White Oak	24	2 - Good			Remove	Conflict with proposed development
2393	Quercus alba	White Oak	25	2 - Good	Crown Lean		Remove	Conflict with proposed development
2394	Acer saccharum	Sugar Maple	6	2 - Good	Unbalanced		Remove	Conflict with proposed development
2395	Acer saccharum	Sugar Maple	5	2 - Good	Lean, Unbalanced		Remove	Conflict with proposed development
2396	Acer saccharum	Sugar Maple	7	2 - Good			Remove	Conflict with proposed development
2397	Quercus alba	White Oak	21	2 - Good	Lean, Crown Lean		Remove	Conflict with proposed development
2398	Quercus alba	White Oak	17	2 - Good			Remove	Conflict with proposed development
2399	Quercus alba	White Oak	23	2 - Good			Remove	Conflict with proposed development
2400	Quercus alba	White Oak	17	2 - Good	Lean, Crown Lean		Remove	Conflict with proposed development
2401	Quercus alba	White Oak	18	5 - Poor	Lean, Crown Lean	>50% dead wood	Remove	Impact to critical root zone
2402	Quercus alba	White Oak	17	3 - Fair	Unbalanced, Crown Lean	30% dead wood	Preserve	High quality tree near proposed impacts
2403	Quercus alba	White Oak	17	2 - Good	Lean, Crown Lean	10% dead wood	Preserve	Off-site
2404	Ulmus americana	American Elm	6	3 - Fair	Lean, Unbalanced		Preserve	Off-site
2405	Quercus rubra	Red Oak	15	2 - Good	Unbalanced		Preserve	Off-site
2406	Prunus serotina	Black Cherry	10	3 - Fair	Lean, Crown Lean	10% dead wood	Preserve	Off-site
2407	Ulmus americana	American Elm	15	2 - Good	Lean		Preserve	Off-site
2408	Ulmus americana	American Elm	11	3 - Fair	Lean, Crown Lean	10% dead wood	Preserve	Off-site
2409	Ulmus americana	American Elm	12	2 - Good			Preserve	Off-site
2410	Ulmus americana	American Elm	6	2 - Good	Unbalanced		Preserve	Off-site
2411	Ulmus americana	American Elm	9	3 - Fair	Crowded	10% dead wood	Preserve	Off-site
2412	Ulmus americana	American Elm	6	2 - Good	Unbalanced		Preserve	Off-site
2413	Tilia americana	American Basswood	8	2 - Good	Crown Lean		Preserve	Off-site
2414	Ulmus americana	American Elm	8	3 - Fair	Lean, Crown Lean		Preserve	Off-site
2415	Ulmus americana	American Elm	6	4 - Fair/Poor	Lean, Crown Lean	Trunk Scar	Preserve	Off-site
2416	Ulmus americana	American Elm	10	3 - Fair	Lean, Crown Lean		Preserve	Off-site
2417	Tilia americana	American Basswood	18	3 - Fair	Lean, Crown Lean		Preserve	Off-site
2418	Ulmus americana	American Elm	7	3 - Fair	Lean, Crown Lean		Preserve	Off-site
2419	Ulmus americana	American Elm	6	2 - Good			Preserve	Off-site
2420	Prunus serotina	Black Cherry	7	5 - Poor	Lean	>50% dead wood, Trunk Scar	Preserve	Off-site
2421	Quercus alba	White Oak	25	2 - Good	Unbalanced	20% dead wood, Dead Limbs	Preserve	Off-site
2422	Ulmus americana	American Elm	6	3 - Fair	Lean, Crown Lean		Preserve	Off-site
2423	Quercus alba	White Oak	30	2 - Good		10% dead wood	Preserve	Off-site
2424	Tilia americana	American Basswood	7	2 - Good			Preserve	Off-site
2425	Carya ovata	Shagbark Hickory	25	2 - Good	Lean		Preserve	Off-site
2426	Acer saccharum	Sugar Maple	7	2 - Good			Preserve	Off-site
2427	Acer saccharum	Sugar Maple	6	2 - Good			Remove	Impact to critical root zone
2428	Quercus alba	White Oak	24	2 - Good			Preserve	High quality tree near proposed impacts
2429	Acer saccharum	Sugar Maple	6	2 - Good			Remove	Impact to critical root zone
2430	Acer saccharum	Sugar Maple	6	2 - Good			Remove	Conflict with proposed development
2431	Acer saccharum	Sugar Maple	5	2 - Good			Remove	Conflict with proposed development
2432	Acer saccharum	Sugar Maple	8	2 - Good			Preserve	High quality tree near proposed impacts
2433	Quercus alba	White Oak	26	2 - Good	Crown Lean		Preserve	Off-site
2434	Quercus alba	White Oak	22	2 - Good			Preserve	Off-site
2435	Acer saccharum	Sugar Maple	6	2 - Good			Remove	Impact to critical root zone
2436	Quercus alba	White Oak	18	2 - Good			Remove	Conflict with proposed development
2437	Acer saccharum	Sugar Maple	6	2 - Good			Remove	Conflict with proposed development
2438	Acer saccharum	Sugar Maple	4	2 - Good	Unbalanced		Remove	Conflict with proposed development
2439	Acer saccharum	Sugar Maple	4	3 - Fair		Trunk Scar	Remove	Conflict with proposed development
2440	Quercus alba	White Oak	26	2 - Good	Lean, Crown Lean		Remove	Conflict with proposed development
2441	Quercus alba	White Oak	15	2 - Good	Crown Lean		Remove	Conflict with proposed development
2442	Ulmus americana	American Elm	8	3 - Fair	Lean, Crown Lean		Remove	Conflict with proposed development
2443	Acer saccharum	Sugar Maple	4	2 - Good	Crown Lean		Remove	Conflict with proposed development
2444	Acer saccharum	Sugar Maple	4	3 - Fair	Lean, Crown Lean, Crowded		Remove	Conflict with proposed development
2445	Acer saccharum	Sugar Maple	6	2 - Good			Remove	Conflict with proposed development
2446	Quercus alba	White Oak	27	2 - Good			Remove	Conflict with proposed development
2447	Pinus strobus	White Pine	13,45'	3 - Fair	Lean, Crown Lean		Remove	Conflict with proposed development
2448	Ulmus americana	American Elm	7	6 - Dead			Remove	Conflict with proposed development
2449	Pinus strobus	White Pine	13,50'	3 - Fair	Lean, Unbalanced		Remove	Conflict with proposed development
2450	Ulmus americana	American Elm	5	6 - Dead			Remove	Conflict with proposed development
2451	Ulmus americana	American Elm	17	3 - Fair	Unbalanced, Crown Lean		Remove	Conflict with proposed development
2452	Quercus rubra	Red Oak	6	3 - Fair	Lean, Crown Lean, Crowded		Remove	Conflict with proposed development
2453	Acer saccharum	Sugar Maple	4	2 - Good	Unbalanced		Remove	Conflict with proposed development
2454	Quercus alba	White Oak	22	2 - Good	Unbalanced		Remove	Conflict with proposed development
2455	Ulmus americana	American Elm	9	3 - Fair	Unbalanced, Crown Lean		Remove	Conflict with proposed development
2456	Acer saccharum	Sugar Maple	4	3 - Fair	Unbalanced, Crown Lean		Remove	Conflict with proposed development
2457	Quercus alba	White Oak	24	3 - Fair		10% dead wood, Crown Tip Die Back	Remove	Conflict with proposed development
2458	Quercus alba	White Oak	19	2 - Good	Lean		Remove	Conflict with proposed development
2459	Acer saccharum	Sugar Maple	7	2 - Good	Lean		Remove	Conflict with proposed development
2460	Acer saccharum	Sugar Maple	7	2 - Good	Unbalanced		Remove	Conflict with proposed development
2461	Quercus alba	White Oak	18	2 - Good	Lean		Remove	Conflict with proposed development
2462	Quercus alba	White Oak	16	2 - Good	Lean		Remove	Conflict with proposed development
2463	Quercus alba	White Oak	34	2 - Good	Lean		Remove	Conflict with proposed development
2464	Quercus alba	White Oak	21	2 - Good	Lean, Crown Lean		Remove	Conflict with proposed development
2465	Quercus alba	White Oak	17	4 - Fair/Poor	Crown Lean	Hollow, Cavity	Remove	Conflict with proposed development
2466	Acer saccharum	Sugar Maple	6	2 - Good			Remove	Conflict with proposed development
2467	Acer saccharum	Sugar Maple	6	2 - Good			Remove	Conflict with proposed development
2468	Quercus alba	White Oak	25	2 - Good	Lean	10% dead wood	Remove	Conflict with proposed development
2469	Acer saccharum	Sugar Maple	7	2 - Good	Lean		Remove	Conflict with proposed development
2470	Ulmus americana	American Elm	6	3 - Fair	Lean, Crown Lean		Remove	Conflict with proposed development
2471	Acer saccharum	Sugar Maple	5	2 - Good			Remove	Conflict with proposed development
2472	Acer saccharum	Sugar Maple	5	2 - Good			Remove	Conflict with proposed development
2473	Acer saccharum	Sugar Maple	5	2 - Good			Remove	Conflict with proposed development
2474	Quercus alba	White Oak	22	2 - Good	Crown Lean		Remove	Conflict with proposed development
2475	Acer saccharum	Sugar Maple	7	3 - Fair	Lean, Crown Lean		Remove	Conflict with proposed development
2476	Acer saccharum	Sugar Maple	6	2 - Good	Unbalanced		Remove	Conflict with proposed development
2477	Acer saccharum	Sugar Maple	6	2 - Good	Unbalanced		Remove	Conflict with proposed development
2478	Acer saccharum	Sugar Maple	7	2 - Good	Unbalanced		Remove	Conflict with proposed development
2479	Quercus alba	White Oak	35	2 - Good		10% dead wood, Dead Limbs	Remove	Conflict with proposed development
2480	Acer saccharum	Sugar Maple	6	2 - Good	Unbalanced		Remove	Conflict with proposed development
2481	Acer saccharum	Sugar Maple	8	2 - Good	Unbalanced		Remove	Impact to critical root zone
2482	Quercus alba	White Oak	8	2 - Good	Crown Lean		Preserve	High quality tree near proposed impacts
2483	Ulmus americana	American Elm	6	3 - Fair	Lean, Crown Lean		Preserve	Off-site
2484	Ulmus americana	American Elm	5	3 - Fair	Lean, Crown Lean		Preserve	Off-site
2485	Acer saccharum	Sugar Maple	7	2 - Good			Preserve	High quality tree near proposed impacts
2486	Acer saccharum	Sugar Maple	7	4 - Fair/Poor	Unbalanced, Crown Lean	Trunk Scar, Sparse foliage	Remove	Impact to critical root zone
2487	Acer saccharum	Sugar Maple	7	2 - Good			Preserve	No impact
2488	Quercus alba	White Oak	31	3 - Fair	Strong lean		Preserve	Off-site
2489	Quercus alba	White Oak	25	2 - Good	Unbalanced		Preserve	Off-site
2490	Quercus alba	White Oak	26	2 - Good	Lean, Crown Lean	20% dead wood	Preserve	Off-site
2491	Quercus alba	White Oak	23	2 - Good	Lean		Preserve	Off-site

EXHIBIT G

GARY R. WEBER ASSOCIATES, INC.
LAND PLANNING
ECOLOGICAL CONSULTING
LANDSCAPE ARCHITECTURE
402 W. LIBERTY DRIVE
WHEATON, ILLINOIS 60187
PHONE: 630-668-7197
www.grwainc.com

CLIENT
M/I HOMES
2135 CITY GATE LANE, SUITE 620
NAPERVILLE, IL 60563

ENGINEER
CAGE
2200 CABOT DRIVE
SUITE 325
LISLE, IL 60532

NORTHWOODS OF NAPERVILLE
NAPERVILLE, ILLINOIS
TREE INVENTORY

03 07.07.2025
02 06.20.2025
01 05.23.2025
REVISIONS

DATE 04.04.2025
PROJECT NO. MI24251
DRAWN AJG/CLE
CHECKED DHS
SHEET NO.
12 OF 14

Know what's below. Call before you dig.

XREFS:
PLOT CONFIG:

TAG NO.	SCIENTIFIC NAME	COMMON NAME	DBH (inches)	CONDITION	STRUCTURE	HEALTH	PROPOSED ACTION	NOTES
2492	Quercus alba	White Oak	32	2 - Good	Lean	10% dead wood	Preserve	Off-site
2493	Quercus alba	White Oak	29	2 - Good	Lean		Preserve	Off-site
2494	Ulmus americana	American Elm	7	3 - Fair	Crown Lean	10% dead wood	Preserve	Off-site
2495	Quercus alba	White Oak	30	2 - Good	Crown Lean	10% dead wood, Dead Limbs	Preserve	Off-site
2496	Quercus alba	White Oak	24	2 - Good	Crown Lean		Preserve	Off-site
2497	Quercus alba	White Oak	25	2 - Good	Lean	10% dead wood, Dead Limbs	Preserve	Off-site
2498	Quercus alba	White Oak	26	2 - Good	Lean, Unbalanced		Preserve	Off-site
2499	Quercus alba	White Oak	26	2 - Good	Crown Lean		Preserve	Off-site
2500	Carya ovata	Shagbark Hickory	21	2 - Good	Unbalanced, Crown Lean		Preserve	Off-site
2501	Quercus alba	White Oak	26	2 - Good		10% dead wood	Preserve	Off-site
2502	Quercus rubra	Red Oak	38	5 - Poor	Broken Leader	Missing Crown	Preserve	Off-site
2503	Ulmus americana	American Elm	9	3 - Fair	Crown Lean		Preserve	Off-site
2504	Ulmus americana	American Elm	6	5 - Poor	Broken Leader		Preserve	Off-site
2505	Ulmus americana	American Elm	7	2 - Good			Preserve	Off-site
2506	Quercus alba	White Oak	26	3 - Fair		Wood rot, Trunk Scar	Preserve	Off-site
2507	Quercus alba	White Oak	27	2 - Good	Unbalanced		Preserve	Off-site
2508	Acer saccharum	Sugar Maple	7	3 - Fair	Unbalanced, Crowded		Preserve	Off-site
2509	Carya ovata	Shagbark Hickory	20	5 - Poor	Broken Limb, Broken Leader	40% dead wood	Preserve	Off-site
2510	Ulmus americana	American Elm	11	3 - Fair	Unbalanced, Crown Lean	10% dead wood	Remove	Impact to critical root zone
2511	Acer saccharum	Sugar Maple	8	3 - Fair	Lean	Trunk Scar	Remove	Conflict with proposed development
2512	Ulmus americana	American Elm	4	3 - Fair	Lean, Crowded		Remove	Conflict with proposed development
2513	Quercus rubra	Red Oak	11	2 - Good	Lean		Remove	Conflict with proposed development
2514	Acer saccharum	Sugar Maple	7	2 - Good	Crowded		Remove	Conflict with proposed development
2515	Acer saccharum	Sugar Maple	4	3 - Fair	Crown Lean, Crowded		Remove	Conflict with proposed development
2516	Carya ovata	Shagbark Hickory	21	2 - Good			Remove	Conflict with proposed development
2517	Acer saccharum	Sugar Maple	6	2 - Good	Unbalanced		Remove	Conflict with proposed development
2518	Acer saccharum	Sugar Maple	4	4 - Fair/Poor	Lean, Unbalanced	Trunk Scar, Sparse foliage	Remove	Conflict with proposed development
2519	Acer saccharum	Sugar Maple	5	2 - Good			Remove	Conflict with proposed development
2520	Acer saccharum	Sugar Maple	7	2 - Good	Unbalanced		Remove	Conflict with proposed development
2521	Prunus serotina	Black Cherry	8	3 - Fair	Lean		Remove	Conflict with proposed development
2522	Acer saccharum	Sugar Maple	6	3 - Fair	Crown Lean		Remove	Conflict with proposed development
2523	Quercus rubra	Red Oak	7	2 - Good	Lean		Remove	Conflict with proposed development
2524	Quercus rubra	Red Oak	12	2 - Good	Unbalanced		Remove	Conflict with proposed development
2525	Acer saccharum	Sugar Maple	6	2 - Good			Remove	Conflict with proposed development
2526	Acer saccharum	Sugar Maple	4	2 - Good	Unbalanced		Remove	Impact to critical root zone
2527	Acer saccharum	Sugar Maple	6	2 - Good	Unbalanced		Preserve	No impact
2528	Acer saccharum	Sugar Maple	10	2 - Good	Unbalanced		Preserve	High quality tree near proposed impacts
2529	Acer saccharum	Sugar Maple	4	2 - Good			Preserve	Off-site
2530	Acer saccharum	Sugar Maple	6	5 - Poor	Broken Leader		Preserve	Off-site
2531	Ulmus americana	American Elm	7	3 - Fair	Crown Lean, Broken Limb		Preserve	Off-site
2532	Quercus alba	White Oak	34	2 - Good			Preserve	Off-site
2533	Ulmus americana	American Elm	7	3 - Fair	Lean	Trunk Scar	Preserve	Off-site
2534	Ulmus americana	American Elm	11	3 - Fair	Unbalanced		Preserve	Off-site
2535	Ulmus americana	American Elm	4	3 - Fair	Lean, Crown Lean		Preserve	Off-site
2536	Ulmus americana	American Elm	7	3 - Fair	Crown Lean		Preserve	Off-site
2537	Prunus serotina	Black Cherry	7	3 - Fair	Crown Lean, Crowded		Preserve	Off-site
2538	Quercus alba	White Oak	38	2 - Good	Lean, Crown Lean	10% dead wood	Preserve	Off-site
2539	Quercus alba	White Oak	27	6 - Dead			Preserve	Off-site
2540	Quercus alba	White Oak	30	2 - Good			Preserve	Off-site
2541	Carya ovata	Shagbark Hickory	30	5 - Poor		40% dead wood, Dead Limbs, Cavity	Preserve	Off-site
2542	Prunus serotina	Black Cherry	7	3 - Fair	Unbalanced		Preserve	Off-site
2543	Acer saccharum	Sugar Maple	8	2 - Good	Unbalanced		Preserve	Off-site
2544	Ulmus americana	American Elm	11	4 - Fair/Poor	Lean, Crown Lean, Crowded	Vines	Preserve	Off-site
2545	Quercus alba	White Oak	28	4 - Fair/Poor	Lean, Crown Lean	30% dead wood, Cavity	Preserve	Off-site
2546	Quercus alba	White Oak	28	2 - Good		30% dead wood	Preserve	Off-site
2547	Quercus alba	White Oak	28	3 - Fair	Strong lean	30% dead wood	Preserve	Off-site
2548	Quercus alba	White Oak	26	6 - Dead			Preserve	Off-site
2549	Ulmus americana	American Elm	6	3 - Fair	Lean, Crown Lean		Preserve	Off-site
2550	Ulmus americana	American Elm	10	3 - Fair	Crown Lean		Preserve	Off-site
2551	Ulmus americana	American Elm	11	3 - Fair	Lean		Preserve	Off-site
2552	Ulmus americana	American Elm	5	5 - Poor	Lean, Crown Lean	>50% dead wood	Preserve	Off-site
2553	Prunus serotina	Black Cherry	9	3 - Fair	Unbalanced, Crown Lean		Preserve	Off-site
2554	Ulmus americana	American Elm	14	4 - Fair/Poor	Lean, Crown Lean, Crowded		Preserve	Off-site
2555	Quercus alba	White Oak	37	2 - Good	Lean		Preserve	Off-site
2556	Prunus serotina	Black Cherry	8	3 - Fair	Lean, Crown Lean		Preserve	Off-site
2557	Quercus alba	White Oak	27	2 - Good			Preserve	Off-site
2558	Quercus alba	White Oak	35	4 - Fair/Poor	Lean	40% dead wood, Dead Limbs	Preserve	Off-site
2559	Carya ovata	Shagbark Hickory	8	3 - Fair	Lean, Crown Lean		Preserve	Off-site
2560	Carya ovata	Shagbark Hickory	17	2 - Good	Lean, Crown Lean		Preserve	Off-site
2561	Ulmus americana	American Elm	14	3 - Fair	Lean, Crown Lean		Preserve	Off-site
2562	Ulmus americana	American Elm	22	3 - Fair	Unbalanced, Crown Lean		Preserve	Off-site
2563	Morus alba	White Mulberry	5	4 - Fair/Poor	Lean, Crown Lean, Crowded	Trunk Scar	Remove	Impact to critical root zone
2564	Juglans nigra	Black Walnut	13	2 - Good	Unbalanced		Remove	Impact to critical root zone
2565	Morus alba	White Mulberry	8	6 - Dead			Remove	Dead
2566	Ulmus americana	American Elm	5	5 - Poor	Lean, Crown Lean	Cavity, Vines	Remove	Poor condition
2567	Ulmus americana	American Elm	16	3 - Fair	Lean, Crown Lean		Preserve	Potential impact
2568	Prunus serotina	Black Cherry	10	3 - Fair	Lean, Crown Lean		Preserve	Off-site
2569	Prunus serotina	Black Cherry	6	5 - Poor	Strong lean		Preserve	Off-site
2570	Quercus alba	White Oak	30	2 - Good	Lean		Preserve	Off-site
2571	Morus alba	White Mulberry	12,4,4	5 - Poor	V-shaped joint, Multi Leader, Split Risk	Trunk Damage	Remove	Impact to critical root zone
2572	Carya ovata	Shagbark Hickory	4	3 - Fair	Lean, Crown Lean, Crowded		Preserve	High quality tree near proposed impacts
2573	Carya ovata	Shagbark Hickory	5	3 - Fair	Lean, Crown Lean		Preserve	High quality tree near proposed impacts
2574	Carya ovata	Shagbark Hickory	7	6 - Dead			Remove	Impact to critical root zone
2575	Carya ovata	Shagbark Hickory	6	6 - Dead			Remove	Impact to critical root zone
2576	Carya ovata	Shagbark Hickory	7	3 - Fair	Lean, Crown Lean	Vines	Remove	Impact to critical root zone
2577	Carya ovata	Shagbark Hickory	6	3 - Fair	Lean, Crown Lean		Preserve	High quality tree near proposed impacts
2578	Ulmus americana	American Elm	6	3 - Fair	Crown Lean		Remove	Conflict with proposed development
2579	Ulmus americana	American Elm	8	3 - Fair	Lean, Crown Lean	10% dead wood	Remove	Conflict with proposed development
2580	Juglans nigra	Black Walnut	13	3 - Fair	Unbalanced		Remove	Conflict with proposed development
2581	Fraxinus spp.	Ash	6	6 - Dead			Remove	Conflict with proposed development
2582	Juglans nigra	Black Walnut	12	3 - Fair	Unbalanced	10% dead wood	Remove	Impact to critical root zone
2583	Juglans nigra	Black Walnut	9	3 - Fair	Lean, Crown Lean		Remove	Impact to critical root zone
2584	Juglans nigra	Black Walnut	16	2 - Good	Lean		Remove	Impact to critical root zone
2585	Fraxinus spp.	Ash	11	6 - Dead			Remove	Conflict with proposed development
2586	Carya ovata	Shagbark Hickory	4	5 - Poor	Lean	>50% dead wood	Remove	Conflict with proposed development
2587	Juglans nigra	Black Walnut	10	3 - Fair	Lean, Unbalanced	10% dead wood	Remove	Conflict with proposed development
2588	Ulmus americana	American Elm	7	4 - Fair/Poor	Lean, Crown Lean, Crowded	10% dead wood	Remove	Conflict with proposed development
2589	Ulmus rubra	Slippery Elm	4	4 - Fair/Poor	Lean, Crown Lean, Crowded		Remove	Conflict with proposed development
2590	Ulmus rubra	Slippery Elm	5	3 - Fair	Lean, Crown Lean		Remove	Conflict with proposed development
2591	Juglans nigra	Black Walnut	12	3 - Fair	Lean		Remove	Conflict with proposed development
2592	Ulmus americana	American Elm	4	5 - Poor		>50% dead wood, Vines	Remove	Conflict with proposed development
2593	Carya ovata	Shagbark Hickory	4	3 - Fair		Trunk Scar	Remove	Conflict with proposed development
2594	Juglans nigra	Black Walnut	14	2 - Good	Lean		Remove	Conflict with proposed development
2595	Carya ovata	Shagbark Hickory	5	3 - Fair	Lean, Crown Lean		Preserve	High quality tree near proposed impacts
2596	Carya ovata	Shagbark Hickory	4	3 - Fair	Lean, Crown Lean		Preserve	High quality tree near proposed impacts
2597	Carya ovata	Shagbark Hickory	5	3 - Fair	Unbalanced, Crowded		Preserve	High quality tree near proposed impacts
2598	Ulmus americana	American Elm	9,8	5 - Poor	V-shaped joint, Double Leader, Split Risk	Growing in Fence	Preserve	Off-site
2599	Carya ovata	Shagbark Hickory	11	3 - Fair	Lean		Preserve	Off-site
2600	Carya ovata	Shagbark Hickory	9	2 - Good			Preserve	Off-site
2601	Carya ovata	Shagbark Hickory	5	3 - Fair	Lean, Crown Lean		Preserve	Off-site
2602	Carya ovata	Shagbark Hickory	13	2 - Good	Lean		Preserve	Off-site
2603	Carya ovata	Shagbark Hickory	10	3 - Fair	Lean	Trunk Scar	Preserve	Off-site
2604	Carya ovata	Shagbark Hickory	11	2 - Good	Lean		Preserve	Off-site
2605	Carya ovata	Shagbark Hickory	13	2 - Good	Lean		Preserve	Off-site
2606	Quercus rubra	Red Oak	7	2 - Good	Crown Lean		Preserve	Off-site
2607	Ulmus americana	American Elm	8	2 - Good			Preserve	Off-site
2608	Quercus rubra	Red Oak	27	2 - Good			Preserve	Off-site
2609	Quercus rubra	Red Oak	9	2 - Good	Lean		Preserve	Off-site
2610	Carya ovata	Shagbark Hickory	15	2 - Good	Lean		Preserve	Off-site
2611	Carya ovata	Shagbark Hickory	12	2 - Good	Unbalanced		Preserve	Off-site
2612	Carya ovata	Shagbark Hickory	15	2 - Good	Unbalanced		Preserve	Off-site
2613	Quercus rubra	Red Oak	32	4 - Fair/Poor		Trunk Scar	Preserve	Off-site
2614	Ulmus americana	American Elm	11	3 - Fair	Unbalanced, Crown Lean		Preserve	Off-site
2615	Carya ovata	Shagbark Hickory	6	2 - Good		Vines	Preserve	Off-site
2616	Carya ovata	Shagbark Hickory	12	3 - Fair	Lean	Trunk Scar	Preserve	Off-site
2617	Ulmus americana	American Elm	28	3 - Fair		Trunk Scar	Preserve	Off-site
2618	Carya ovata	Shagbark Hickory	7	2 - Good	Lean		Preserve	Off-site
2619	Acer negundo	Box Elder	7	5 - Poor	Strong lean, Broken Leader		Remove	Conflict with proposed development
2620	Ulmus americana	American Elm	21	6 - Dead			Remove	Conflict with proposed development
2621	Carya ovata	Shagbark Hickory	5	6 - Dead			Remove	Conflict with proposed development
2622	Pinus sylvestris	Scots Pine	16,50	2 - Good	Unbalanced		Remove	Conflict with proposed development
2623	Carya ovata	Shagbark Hickory	4	6 - Dead			Remove	Conflict with proposed development
2624	Acer negundo	Box Elder	25	6 - Dead			Remove	Impact to critical root zone
2625	Carya ovata	Shagbark Hickory	8	3 - Fair	Lean, Crown Lean		Remove	Impact to critical root zone
2626	Ulmus americana	American Elm	13	2 - Good			Remove	Conflict with proposed development
2627	Ulmus americana	American Elm	5	5 - Poor	Strong lean, Crown Lean		Remove	Impact to critical root zone
2628	Ulmus americana	American Elm	5	5 - Poor	Strong lean, Crown Lean		Remove	Impact to critical root zone
2629	Juglans nigra	Black Walnut	18	2 - Good	Lean		Remove	Impact to critical root zone
2630	Carya ovata	Shagbark Hickory	4	3 - Fair	Lean, Crown Lean		Remove	Impact to critical root zone
2631	Ulmus americana	American Elm	12	3 - Fair	Lean, Crown Lean		Remove	Impact to critical root zone
2632	Ulmus americana	American Elm	7	4 - Fair/Poor	Lean, Crown Lean, Crowded		Remove	Impact to critical root zone
2633	Ulmus americana	American Elm	5	4 - Fair/Poor	Lean, Crown Lean, Crowded	20% dead wood	Remove	Impact to critical root zone
2634	Ulmus americana	American Elm	28	2 - Good			Remove	Conflict with proposed development
2635	Ulmus americana	American Elm	9	5 - Poor	Lean, Broken Leader	Vines	Remove	Poor condition
2636	Tilia americana	American Basswood	17,15,7	5 - Poor	Multi Leader, Broken Leader	Growing in Fence	Remove	Poor condition
2637	Pinus sylvestris	Scots Pine	13,45	3 - Fair	Lean, Unbalanced		Remove	Conflict with proposed development
2638	Ulmus pumila	Siberian Elm	29	3 - Fair			Remove	Conflict with proposed development
2639	Ulmus americana	American Elm	5	3 - Fair	Crown Lean, Crowded		Remove	Conflict with proposed development
2640	Ulmus rubra	Slippery Elm	8	3 - Fair			Remove	Impact to critical root zone
2641	Crataegus spp.	Hawthorn	7	3 - Fair	Crown Lean		Remove	Impact to critical root zone
2642	Ulmus americana	American Elm	6	3 - Fair	Unbalanced, Crown Lean		Remove	Impact to critical root zone
2643	Ulmus americana	American Elm	10	5 - Poor	Strong lean	Dead Leaning On	Remove	Poor condition
2644	Fraxinus spp.	Ash	13	6 - Dead			Remove	Dead
2645	Juglans nigra	Black Walnut	28	4 - Fair/Poor		Dead Limbs, Trunk Scar	Remove	Poor condition
2646	Juglans nigra	Black Walnut	26	5 - Poor		>50% dead wood, Dead Limbs, Cavity	Remove	Poor condition
2647	Tilia americana	American Basswood	12	2 - Good			Remove	Conflict with proposed development
2648	Morus alba	White Mulberry	18,10,10,8	5 - Poor	Multi Leader, Split Risk, Split Leaders	Fungus-Stem, Trunk Damage	Remove	Conflict with proposed development
2649	Ulmus americana	American Elm	17	4 - Fair/Poor	Lean, Crown Lean	Dead Leaning On	Remove	Conflict with proposed development
2650	Carya ovata	Shagbark Hickory	4	3 - Fair	Lean		Preserve	Conflict with proposed development
2651	Juglans nigra	Black Walnut	26	2 - Good			Preserve	Conflict with proposed development
2652	Fagus grandifolia	American Beech	20	4 - Fair/Poor	Fused Leaders	Dead Leader, Trunk Scar	Preserve	Conflict with proposed development
2653	Juglans nigra	Black Walnut	17	2 - Good	Unbalanced		Remove	Conflict with proposed development
2654	Ulmus americana	American Elm	15	3 - Fair	Lean, Crown Lean		Remove	Impact to critical root zone
2655	Ulmus americana	American Elm	8	3 - Fair	Crown Lean	10% dead wood	Remove	Impact to critical root zone
2656	Quercus rubra	Red Oak	21	2 - Good			Remove	Conflict with proposed development
2657	Celtis occidentalis	Hackberry	13	2 - Good	Crown Lean		Remove	Conflict with proposed development
2658	Ulmus americana	American Elm	18	3 - Fair	Lean, Crown Lean		Remove	Conflict with proposed development
2659	Tilia americana	American Basswood	6	4 - Fair/Poor	Lean, Crown Lean	Trunk Scar	Remove	Poor condition
2660	Tilia americana	American Basswood	5	3 - Fair	Unbalanced, Crown Lean		Remove	Conflict with proposed development
2661	Tilia americana	American Basswood	7	4 - Fair/Poor	Lean, Crown Lean	Trunk Scar	Remove	Poor condition
2662	Tilia americana	American Basswood	11	3 - Fair	Lean, Unbalanced		Remove	Conflict with proposed development
2663	Tilia americana	American Basswood	10	3 - Fair	Lean, Unbalanced		Remove	Conflict with proposed development
2664	Tilia americana	American Basswood	13	2 - Good			Preserve	Conflict with proposed development
2665	Tilia americana	American Basswood	11	4 - Fair/Poor	Unbalanced, Crown Lean	Trunk Scar	Remove	Poor condition
2666	Tilia americana	American Basswood	4	3 - Fair	Unbalanced, Crown Lean		Remove	Conflict with proposed development
2667	Ulmus americana	American Elm	8	3 - Fair	Lean, Crown Lean		Remove	Impact to critical root zone
2668	Carya ovata	Shagbark Hickory	6	2 - Good			Remove	Conflict with proposed development
2669	Carya ovata	Shagbark Hickory	4	4 - Fair/Poor	Lean, Crown Lean		Remove	Conflict with proposed development
2670	Fraxinus spp.	Ash	6	6 - Dead			Remove	Conflict with proposed development
2671	Fraxinus spp.	Ash	5	6 - Dead			Remove	Conflict with proposed development
2672	Carya cordiformis	Bitternut Hickory	9	3 - Fair	Lean, Crown Lean		Remove	Conflict with proposed development
2673	Carya cordiformis	Bitternut Hickory	4	2 - Good			Remove	Conflict with proposed development
2674	Carya ovata	Shagbark Hickory	8	2 - Good			Remove	Conflict with proposed development
2675	Carya ovata	Shagbark Hickory	4	2 - Good			Remove	Conflict with proposed development
2676	Ulmus americana	American Elm	17	3 - Fair		20% dead wood, Dead Limbs	Remove	Conflict with proposed development
2677	Carya cordiformis	Bitternut Hickory	10	2 - Good			Remove	Conflict with proposed development
2678	Juglans nigra	Black Walnut	12	5 - Poor	Broken Leader	Missing Crown	Remove	Conflict with proposed development
2679	Carya ovata	Shagbark Hickory	8	3 - Fair	Lean, Crown Lean		Remove	Conflict with proposed development
2680	Carya cordiformis	Bitternut Hickory	9	3 - Fair	Lean, Crown Lean		Remove	Conflict with proposed development
2681	Ulmus americana	American Elm	15	3 - Fair	Crown Lean		Remove	Conflict with proposed development
2682	Carya cordiformis	Bitternut Hickory	9	3 - Fair	Lean		Remove	Conflict with proposed development
2683	Carya cordiformis	Bitternut Hickory	15	2 - Good	Lean		Remove	Impact to critical root zone
2684	Carya cordiformis	Bitternut Hickory	10	2 - Good			Remove	Impact to critical root zone
2685	Carya ovata	Shagbark Hickory	4	3 - Fair	Crown Lean		Remove	Impact to critical root zone
2686	Tilia americana	American Basswood	11	2 - Good	Lean		Remove	Conflict with proposed development
2687	Tilia americana	American Basswood	13	2 - Good			Remove	Conflict with proposed development
2688	Tilia americana	American Basswood	5	2 - Good	Crown Lean		Remove	Conflict with proposed development
2689	Tilia americana	American Basswood	14	2 - Good			Remove	Conflict with proposed development
2690	Tilia americana	American Basswood	10	2 - Good	Lean		Remove	Impact to critical root zone
2691	Tilia americana	American Basswood	7	2 - Good	Lean		Remove	Conflict with proposed development
2692	Tilia americana	American Basswood	9	2 - Good			Remove	Conflict with proposed development
2693	Tilia americana	American Basswood	11	2 - Good	Unbalanced		Remove	Conflict with proposed development
2694	Quercus rubra	Red Oak	7	4 - Fair/Poor	Unbalanced	Trunk Scar	Remove	Conflict with proposed development
2695	Tilia americana	American Basswood	8	3 - Fair	Lean, Crown Lean		Remove	Conflict with proposed development
2696	Tilia americana	American Basswood	9	3 - Fair	Unbalanced, Crown Lean	10% dead wood	Remove	Conflict with proposed development
2697	Tilia americana	American Basswood	12	3 - Fair	Unbalanced		Preserve	Conflict with proposed development
2698	Taxus baccata	Yew	12	3 - Fair	Lean	10% dead wood	Remove	Conflict with proposed development
2699	Prunus serotina	Black Cherry	11	4 - Fair/Poor	Lean, Crown Lean	Trunk Damage	Remove	Conflict with proposed development
2700	Ulmus americana	American Elm	7	4 - Fair/Poor	Lean, Crown Lean, Crowded	Trunk Damage	Remove	Conflict with proposed development
2701	Tilia americana	American Basswood	5	3 - Fair	Lean		Remove	Conflict with proposed development
2702	Tilia americana	American Basswood	4	2 - Good			Remove	Conflict with proposed development
2703	Tilia americana	American Basswood	6	2 - Good	Lean		Remove	Conflict with proposed development
2704	Quercus rubra	Red Oak	29	2 - Good	Lean, Unbalanced		Remove	Conflict with proposed development
2705	Quercus rubra	Red Oak	7	3 - Fair	Lean	Trunk Scar	Remove	Conflict with proposed development
2706	Ulmus americana	American Elm	9	2 - Good			Remove	Conflict with proposed development
2707	Carya ovata	Shagbark Hickory	4	2 - Good			Remove	Conflict with proposed development
2708	Tilia americana	American Basswood	15	5 - Poor	Broken Leader	>50% dead wood, Trunk Damage	Remove	Conflict with proposed development
2709	Carya ovata	Shagbark Hickory	9	2 - Good	Unbalanced		Remove	Conflict with proposed development
2710	Tilia americana	American Basswood	12	3 - Fair	Unbalanced, Crown Lean		Remove	Conflict with proposed development
2711	Carya cordiformis	Bitternut Hickory	4	3 - Fair	Lean, Crown Lean		Remove	Conflict with proposed development
2712	Quercus rubra	Red Oak	6	2 - Good	Lean		Remove	Conflict with proposed development
2713	Tilia americana	American Basswood	14	4 - Fair/Poor	Unbalanced	Cavity, Trunk Scar	Remove	Conflict with proposed development
2714	Tilia americana	American Basswood	6	4 - Fair/Poor	Lean, Crown Lean	Trunk Scar	Remove	Conflict with proposed development
2715	Quercus rubra	Red Oak	23	2 - Good	Crown Lean	10% dead wood, Dead Limbs	Remove	Conflict with proposed development
2716	Quercus rubra	Red Oak	7	2 - Good			Remove	Impact to critical root zone
2717	Quercus rubra	Red Oak	30	2 - Good		Callus	Remove	Impact to critical root zone
2718	Tilia americana	American Basswood	9	3 - Fair	Unbalanced, Crown Lean		Remove	Conflict with proposed development
2719	Tilia americana	American Basswood	11	3 - Fair	Unbalanced		Remove	Conflict with proposed development
2720	Acer saccharum	Sugar Maple	6	2 - Good	Lean		Preserve	Off-site
2721	Pinus strobus	White Pine	6	4 - Fair/Poor	Crowded	50% dead wood	Preserve	Off-site
2722	Carya ovata	Shagbark Hickory	4	3 - Fair	Crown Lean, Crowded		Remove	Conflict with proposed development
2723	Tilia americana	American Basswood	7	3 - Fair	Lean, Unbalanced		Remove	Conflict with proposed development
2724	Carya cordiformis	Bitternut Hickory	7	2 - Good	Lean		Remove	Conflict with proposed development
2725	Quercus rubra	Red Oak	10	2 - Good	Unbalanced		Remove	Conflict with proposed development
2726	Carya cordiformis	Bitternut Hickory	5	4 - Fair/Poor	Crown Lean	30% dead wood, Vines	Remove	Conflict with proposed development
2727	Carya cordiformis	Bitternut Hickory	8	2 - Good	Lean		Remove	Conflict with proposed development
2728	Carya ovata	Shagbark Hickory	8	2 - Good	Crown Lean		Remove	Conflict with proposed development
2729	Carya ovata	Shagbark Hickory	4	3 - Fair	Lean, Crown Lean		Remove	Conflict with proposed development
2730	Carya cordiformis	Bitternut Hickory	5	3 - Fair	Lean	Trunk Scar	Remove	Conflict with proposed development
2731	Carya cordiformis	Bitternut Hickory	5	3 - Fair	Lean		Remove	Conflict with proposed development
2732	Acer saccharum	Sugar Maple	6	2 - Good			Remove	Conflict with proposed development
2733	Acer saccharum	Sugar Maple	5	2 - Good	Unbalanced		Remove	Conflict with proposed development
2734	Carya ovata	Shagbark Hickory	10	2 - Good	Lean		Remove	Conflict with proposed development
2735	Juglans nigra	Black Walnut	6	3 - Fair	Lean, Crown Lean		Remove	Conflict with proposed development
2736	Carya cordiformis	Bitternut Hickory	7	6 - Dead			Remove	Conflict with proposed development
2737	Juglans nigra	Black Walnut	9	2 - Good	Lean		Remove	Conflict with proposed development
2738	Ulmus americana	American Elm	6	3 - Fair		20% dead wood	Remove	Conflict with proposed development
2739	Fraxinus spp.	Ash	6	6 - Dead			Remove	Conflict with proposed development
2740	Ulmus americana	American Elm	5	4 - Fair/Poor	Crown Lean	20% dead wood, Trunk Scar	Remove	Conflict with proposed development
2741	Carya ovata	Shagbark Hickory	11	2 - Good			Remove	Conflict with proposed development
2742	Carya ovata	Shagbark Hickory	6	2 - Good	Unbalanced		Remove	Impact to critical root zone
2743	Carya ovata	Shagbark Hickory	5	3 - Fair	Lean, Crown Lean		Remove	Impact to critical root zone
2744	Carya ovata	Shagbark Hickory	9	2 - Good			Remove	Conflict with proposed development
2745	Carya ovata	Shagbark Hickory	7	2 - Good			Remove	Conflict with proposed development
2746	Fraxinus spp.	Ash	5	6 - Dead			Remove	Dead
2747	Carya ovata	Shagbark Hickory	6	3 - Fair	Unbalanced, Crown Lean		Remove	Conflict with proposed development
2748	Carya cordiformis	Bitternut Hickory	6,5	5 - Poor	V-shaped joint, Double Leader, Split Risk		Remove	Poor condition

EXHIBIT G

GARY R. WEBER ASSOCIATES, INC.
LAND PLANNING
ECOLOGICAL CONSULTING
LANDSCAPE ARCHITECTURE
402 W. LIBERTY DRIVE
WHEATON, ILLINOIS 60187
PHONE: 630-668-7197
www.grwainc.com

CLIENT
M/I HOMES
2135 CITY GATE LANE, SUITE 620
NAPERVILLE, IL 60563

ENGINEER
CAGE
2200 CABOT DRIVE
SUITE 325
LISLE, IL 60532

NORTHWOODS OF NAPERVILLE
NAPERVILLE, ILLINOIS
TREE INVENTORY

REVISIONS	
03	07.07.2025
02	06.20.2025
01	05.23.2025

DATE	04.04.2025
PROJECT NO.	MI24251
DRAWN	AJG/CLE
CHECKED	DHS
SHEET NO.	13 OF 14

811 Know what's below. Call before you dig.

LANDSCAPE WORK PART 1 - GENERAL

1.1 DESCRIPTION OF WORK

The work shall consist of furnishing, transporting and installing all seeds, plants and other materials required for:

1. The establishment of trees, shrubs, perennial, annual and lawn areas as shown on Landscape Plan;
2. The provision of post-planting management as specified herein;
3. Any remedial operations necessary in conformance with the plans as specified in this document;
4. The design, furnishing and installation of a complete underground sprinkler system; and
5. Permits which may be required.

1.2 QUALITY ASSURANCE

A. Work shall conform to State of Illinois Horticultural Standards and local municipal requirements.

B. Quality Control Procedures:

1. Ship landscape materials with certificates of inspection as required by governmental authorities. Comply with governing regulations applicable to landscape materials.

2. Do not make substitutions. If specified landscape material is not obtainable, submit to Landscape Architect proof of non-availability and proposal for use of equivalent material.

3. Analysis and Standards: Package standard products with manufacturers certified analysis.

C. Insect Control

1. For areas containing standing water less than 3-ft that persist for greater than 7 days, mosquito control may be necessary. Mosquito control should be limited to larvicides applications such as Natular or Vectolex FG, per the EPA and CDC guidance. Larvicide application should be provided by a qualified professional. Contract the North Shore Mosquito Abatement District for service.

1.3 SUBMITTALS

A. Planting Schedule

Submit three (3) copies of the proposed planting schedule showing dates for each type of planting

B. Maintenance Instruction - Landscape Work

Submit two (2) copies of typewritten instructions recommending procedures to be established by the Owner for the maintenance of landscape work for one full year. Submit prior to expiration of required maintenance periods.

Instructions shall include: watering, fertilizing, spraying, mulching and pruning for plant material and trimming groundcover. Instructions for watering, fertilizing and mowing grass areas shall be provided ten (10) days prior to request for inspection for final acceptance. Landscape Architect shall receive copies of all instructions when issued.

C. Submit two (2) copies of soil test of existing topsoil with recommendations for soil additive requirement to Landscape Architect for review and written approval.

D. Submit two (2) samples of shredded hardwood bark mulch, erosion control blankets, and all other products and materials as specified on plans to Landscape Architect for review and written approval.

E. Nursery packing lists indicating the species and quantities of material installed must be provided to the Owner and/or City upon request.

1.4 JOB CONDITIONS

A. Examine and evaluate grades, soils and water levels. Observe the conditions under which work is to be performed and notify Landscape Architect of unsatisfactory conditions. Do not proceed with the work until unsatisfactory conditions have been corrected in an acceptable manner.

B. Utilities: Review underground utility location maps and plans; notify local utility location service; demonstrate an awareness of utility locations; and certify acceptance of liability for the protection of utilities during course of work. Contractor shall be responsible for any damage to utilities or property.

C. Excavation: When conditions detrimental to plant growth are encountered such as rubble fill, adverse drainage conditions or obstructions, notify Landscape Architect before planting.

1.5 GUARANTEES

A. Guarantee seeded and sodded areas through the specified maintenance period and until final inspection.

B. Guarantee trees, shrubs, groundcover and perennials for a period of one year after date of acceptance against defects including death and unsatisfactory growth, except for defects resulting from neglect by Owner, abuse or damage by others or unusual phenomena or incidents which are beyond Landscape Installer's control.

C. Native Planting Area Performance Criteria

1st Full Growing Season: 90% of cover crop shall be established. There shall be no bare areas greater than two (2) square feet in seeded areas. At least 25% of vegetation coverage shall be native, non-invasive species. 100% of woody vegetation shall be alive and healthy.

2nd Full Growing Season: All areas shall exhibit full vegetative cover. At least 50% of the vegetation coverage shall be native, non-invasive species. 100% of woody vegetation shall be alive and healthy.

3rd Full Growing Season: At least 75% of vegetation coverage shall be native, non-invasive species. Non-native species shall constitute no more than 25% relative aerial coverage of the planted area. Invasive species for this project shall include the following: Ambrosia artemisiifolia & trifida (Common & Giant Ragweed), Cirsium arvense (Canada Thistle), Dipsacus laciniatus (Cut-leaved Teasel), Dipsacus sylvestris (Common Teasel), Lythrum salicaria (Purple Loosestrife), Melilotus sp. (Sweet Clover), Phalaris arundinacea (Reed Canary Grass), Phragmites australis (Giant Reed), Fallopia japonica (Japanese Knotweed), Rhamnus cathartica & frangula (Common & Glossy Buckthorn), Typha sp. (Broadleaf, Narrowleaf, and Hybrid Cattail). 100% of woody vegetation shall be alive and healthy.

In any Season, of the three most dominant plants, none shall be non-native

LANDSCAPE WORK PART 2 - PLANT MATERIALS

2.1 LAWN SOD

Provide strongly rooted sod, not less than two (2) years old and free of weeds and undesirable native grasses. Provide only sod capable of growth and development when planted (viable, not dormant) and in strips not more than 18" wide x 4' long. Provide sod composed of a 5-way blend of Kentucky Bluegrass such as: Midnight, Allure, Viva, Washington, Liberty.

2.2 LAWN SEED MIXTURE

Grass Seed: Provide fresh, clean, new crop seed complying with the tolerance for purity and germination established by the Official Seed Analysts of North America. Provide seed of the grass species, proportions and maximum percentage of weed seed, as specified.

A. Lawn Seed Mixture - 5 lbs. / 1,000 sq. ft.
   50% Kentucky Bluegrass (98/85)
   15% Cutter Perennial Ryegrass
   10% Spartan Hard Fescue
   10% Edge Perennial Ryegrass
   10% Express Perennial Ryegrass
   5% Pennlawn Creeping Red Fescue

B. Temporary Lawn Seed Mixture - 5 lbs. / 1,000 sq. ft.
   40% Kentucky Bluegrass (98/85)
   40% Perennial Ryegrass
   20% Annual Ryegrass

C. Highlands Fescue Seed Mixture - Mixture-7 lbs. / 1,000 sq. ft.
   25% Discovery Hard Fescue
   25% Tiffany Chewings Fescue
   25% Florentine Creeping Red Fescue
   25% Bighorn Sheeps Fescue

D. Detention Seed Mixture - 7 lbs. / 1000 sq. ft.
   70% Kentucky 31 Tall Fescue
   30% Perennial Ryegrass

2.3 NATIVE PLANTING MIXTURES

Provide fresh, clean, new crop of the species and proportions as specified. Native seed and live plant material shall be obtained from a reputable supplier (approved by Landscape Architect) that has collected from sources east of the Mississippi River within the same EPA Level III Ecoregion as the project site (Central Corn Belt Plains). Any material sourced from outside this ecoregion must be approved by the Landscape Architect prior to installation.

For each species, the amount of seed indicated on the specifications shall mean the total amount of pure live seed (PLS) per acre. Seed tags and PLS testing information shall be provided to the Landscape Architect prior to seeding.

It is the sole responsibility of the Native Landscape Contractor to provide approved seed that meets industry-standard PLS requirements.

2.4 GROUNDCOVERS, PERENNIALS AND ANNUALS

Provide plants established and well-rooted in removable containers or integral peat pots and with not less than the minimum number and length of runners required by ANSI Z60.1 for the pot size shown or listed.

2.5 TREES AND SHRUBS

A. Name and Variety: Provide nursery grown plant material true to name and variety.

B. Quality: Provide trees, shrubs and other plants complying with the recommendations and requirements of ANSI Z60.1 "Standard for Nursery Stock" and as further specified.

C. Deciduous Trees: Provide trees of height and caliper listed or shown and with branching configuration recommended by ANSI Z60.1 for type and species required. Provide single stem trees except where special forms are shown or listed. Provide balled and burlapped (B&B) deciduous trees.

D. Deciduous Shrubs: Provide shrubs of the height shown or listed and with not less than the minimum number of canes required by ANSI Z60.1 for the type and height of shrub required. Provide balled and burlapped (B&B) deciduous shrubs.

E. Coniferous Evergreen: Provide evergreens of the sizes shown or listed. Dimensions indicate minimum spread for spreading and semi-spreading type evergreens and height for other types. Provide quality evergreens with well-balanced form complying with requirements for other size relationships to the primary dimension shown. Provide balled and burlapped (B&B) evergreen trees and containerized shrubs.

F. Inspection: All plants shall be subject to inspection and review at the place of growth or upon delivery and conformity to specification requirements as to quality, right of inspection and rejection upon delivery at the site or during the progress of the work for size and condition of balls or roots, diseases, insects and latent defects or injuries. Rejected plants shall be removed immediately from the site.

2.6 PLANTING SOIL MIXTURE

Provide planting soil mixture consisting of clean uncompacted topsoil (stockpiled at site) for all planting pits, perennial, annual and groundcover areas. Topsoil shall be conditioned based on any recommendations resulting from the soil test in 1.3.C.

2.7 EROSION CONTROL

A. Lawn Seed Areas Erosion Control Blanket: North American Green DS75, or equivalent approved equal.

B. Native Areas Erosion Control Blanket: North American Green S150, or equivalent approved equal.

C. Shoreline Areas: Erosion Control Blanket: North American Green SC150, or equivalent approved equal. To be installed per manufacturer's recommendations three feet above and below NWL.

D. Refer to latest Engineering & Erosion Control Plans for any areas to receive permanent or long-term blanket installation.

E. Hydroseed Mulch: Conweb 2000 wood fiber mulch with tackifier. Other mulches may be used subject to approval of Landscape Architect.

2.8 MULCH

Provide mulch consisting of premium shredded hardwood bark. Provide sample to Landscape Architect for approval prior to ordering materials.

LANDSCAPE WORK PART 3 - EXECUTION

3.1 PLANTING SCHEDULE

At least thirty (30) days prior to the beginning of work in each area, submit a planting schedule for approval by the Landscape Architect.

3.2 PLANTINGS

A. Sodding New Lawns

1. Remove existing grass, vegetation and turf. Dispose of such material legally off-site, do not turn over into soil being prepared for lawns.

2. Till to a depth of not less than 6"; apply soil amendments as needed; remove high areas and fill in depressions; till soil to a homogenous mixture of fine texture, remove lumps, clods, stones over 1" diameter, roots and other extraneous matter. Dispose of such material legally off-site.

3. Sodded areas shall receive an application of commercial fertilizer at the rate of 10 lbs. per 1,000 sq. ft. and shall have an analysis of 16-8-8.

4. Lay sod within 24 hours from time of stripping.

5. Lay sod to form a solid mass with tightly fitted joints. Butt ends and sides of sod strips; do not overlap. Stagger strips to offset joints in adjacent courses. Work from boards to avoid damage to subgrade or sod. Tamp or roll lightly to ensure contact with subgrade. Work sifted soil into minor cracks between pieces of sod; remove excess to avoid smothering of adjacent grass.

6. Water sod thoroughly with a fine spray immediately after planting.

B. Seeding New Lawns

1. Remove existing grass, vegetation and turf. Dispose of such material legally off-site. Do not turn over into soil being prepared for lawns.

2. Till to a depth of not less than 6"; apply soil amendments; remove high areas and fill in depressions; till soil to a homogenous mixture of fine texture, remove lumps, clods, stones over 1" diameter, roots and other extraneous matter. Dispose of such material legally off-site.

3. Seeded lawn areas shall receive an application of commercial fertilizer at the rate of 5 lbs. per 1,000 sq. ft. and shall be 6-24-24. Fertilizer shall be uniformly spread and mixed into the soil to a depth of 1" inches.

4. Do not use wet seed or seed which is moldy or otherwise damaged in transit or storage.

5. Sow seed using a spreader or seeding machine. Do not seed when wind velocity exceeds five (5) miles per hour. Distribute seed evenly over entire area by sowing equal quantity in two directions at right angles to each other.

6. Sow not less than specified rate.

7. Rake lawn seed lightly into top 1" of soil, roll lightly and water with a fine spray.

8. After the seeding operation is completed, spray a wood fiber mulch (Conweb 2000 with tackifier or approved equal) over the entire grassed area at the rate of 2,000 lbs. per acre. Use a mechanical spray unit to insure uniform coverage. Exercise care to protect buildings, automobiles and people during the application of the mulch.

9. DO NOT MOW HIGHLANDS FESCUE SEED MIXTURE.

10. All seeding shall reach ninety percent (90%) minimum live coverage after the first growing season.

C. Seeding Native Areas

1. The period for planting prairie seed shall be from April 1 to May 15 or November 1 to just before the first frost. Seeding outside of these timeframes must be approved by the landscape architect. Native seed planted outside of specified timeframes must have at least 60 days of growth prior to frost. Dormant seeding in winter is possible if soil conditions allow.

2. The General Contractor and Native Landscape Contractor shall be responsible for performing all work necessary to achieve and maintain an acceptable seedbed prior to seeding. All areas must be properly prepared before seeding begins. Equipment having low unit pressure ground contact shall be utilized within the planting areas.

3. If present, compacted soils shall be disked or raked prior to seeding. Remedial measures for the access area may, at the direction of the Wetland Consultant, involve ripping from 12 to 18 inches of the soil horizon prior to disking.

4. Prior to seeding, planting areas shall have at least twelve inches of clean un-compacted topsoil. Clumps, clods, stones over 2" diameter, roots and other extraneous matter shall be removed and disposed of legally off-site.

5. Granular mycorrhizal inoculants shall be installed with the seed mix at a rate of 40lbs/ acre. Inoculant can be banded under seed, worked into seed or added into spray tanks. Native areas shall not receive fertilizer.

6. Contractor shall be solely responsible for the proper handling and storage of the seed according to the best seed handling and storage practices, including fungicide treatments and stratification considerations. Owner shall make no compensation for damage to the seed because of improper storage, cleaning, threshing, or screening operations.

7. Except where site conditions preclude their use, seeding shall be performed using a Truax drill, Truax Trillion seeder, or comparable equipment designed specifically for installation of native seed. For areas where site conditions preclude the use of specialized equipment, seed may be installed through hand broadcasting and followed by light raking. Hand broadcast seed shall be spread at twice the specified rate. Other methods of seed installation may be used with prior approval from the Landscape Architect.

8. Prior to starting work, all seeding equipment shall be calibrated and adjusted to sow seeds at the proper seeding rate. In general, the optimum seeding depth is 0.25 inch below the soil surface. Areas where the seed has not been incorporated into the soil to the proper depths will not be accepted, and no compensation for materials or labor for the rejected work will be made by the Owner.

9. Seeding and soil tracking/firming shall not be done during periods of rain, severe drought, high winds, excessive moisture, frozen ground, or other conditions that preclude satisfactory results.

10. Wet mesic areas shall be planted, and seed allowed to germinate (if possible), prior to flooding with significant amounts of water. Any areas of significant permanent water located within the planting area will receive live plugs in lieu of seed.

11. After the seeding operation is completed, install erosion control blanket per manufacturer's specifications.

D. Groundcover and Perennial Beds

Groundcover, perennials, and annuals shall be planted in continuous beds of planting soil mixture a minimum of 8" deep. Install per spacing indicated on plan.

E. Trees and Shrubs

1. Set balled and burlapped (B&B) stock plumb and in center of pit or trench with top of ball at an elevation that will keep the root flare exposed upon backfill and mulching. Remove burlap from top and sides of balls; retain on bottoms. When set, place additional topsoil backfill around base and sides of ball and work each layer to settle backfill and eliminate voids and air pockets. When excavation is approximately 2/3 full, water thoroughly before placing remainder of backfill. Repeat watering until no more is absorbed. Water again after placing final layer of backfill.

2. Dish top of backfill to allow for mulching. Provide additional backfill berm around edge of excavations to form shallow saucer to collect water.

3. Mulch pits, trenches and planted areas. Provide not less than 3" thickness of mulch and work into top of backfill and finish level with adjacent finish grades. Maintain exposed root flare at all times.

4. Prune only injured or dead branches from flowering trees, if any. Protect central leader of tree during shipping and pruning operations. Prune shrubs to retain natural character in accordance with standard horticultural practices.

5. Remove and replace excessively pruned or ill-formed stock resulting from improper pruning.

6. The Contractor shall be wholly responsible for assuring that all trees are planted in a vertical and plumb position and remain so throughout the life of this contract and guarantee period. Trees may or may not be staked and guyed depending upon the individual preference of the Contractor; however, any bracing procedure(s) must be approved by the Owner prior to its installation.

3.3 INITIAL MAINTENANCE

A. Begin maintenance immediately after planting, continuing until final acceptance. A minimum of thirty (30) days.

B. Maintain planted and seeded areas by watering, rolling/regrading, replanting and implementing erosion control as required to establish vegetation free of eroded or bare areas.

C. Highlands Fescue and Native Planting areas are to be mowed only once per spring during the initial three year establishment period.

D. Review the site on a monthly basis and provide reports to the Land Development Manager.

E. Within thirty (30) days prior to expiration of the maintenance period, Contractor, Landscape Architect, HOA Property manager and Developer shall make final inspections to determine acceptability. After final acceptance at the time of survival period expiration, Developer will be responsible for maintenance. The maintenance period shall not expire until the final inspection is approved by a Developer's representative.

3.4 NATIVE LANDSCAPED AREAS
CONTINUED MONITORING & MAINTENANCE

A. Monitoring

The Owner shall notify the City of Naperville upon completion of plantings. The Owner's Environmental Specialist shall inspect the plantings and provide the City of Naperville with a copy of the planting locations, species, and quantities for verification by the City of Naperville .

The Owner's Environmental Specialist shall inspect the plantings at least twice per year during the three-year term of the Establishment and Maintenance Cash Bond or Letter of Credit, to determine compliance with the minimum annual performance criteria (See 1.5C Guarantees). A monitoring report will be provided to the City of Naperville by January 31st following each inspection.

B. Maintenance:

First Season

Native seeding areas should be mowed to a height of 6" to control annual nonnative and invasive species early in the growing season. Mowing, including weed whipping, should be conducted during prior to weed seed production. Mowing height and timing may need to be adjusted per target species. Small quantities of undesirable plant species, shall be controlled by hand pulling prior to the development and maturity of the plant. Hand removal shall include the removal of all above-ground and below-ground stems, roots and flower masses prior to development of seeds. Herbicide should be applied as necessary by a trained and licensed operator that is competent in the identification of native and nonnative herbaceous plants. Debris and litter shall be removed from the native areas and storm structures shall be inspected and maintained as necessary.

Second Season

Control of undesirable plant species during the second growing season shall consist primarily of precise herbicide application. Mowing and weed whipping shall be conducted as needed during the early growing season and as needed to a height of 6 to 8 inches to prevent annual weeds from producing seed. Debris and litter shall be removed from the native areas and storm structures shall be inspected and maintained as necessary.

Third Year:

Seasonal mowing and herbicide will continue as above but should be reduced over time. Debris and litter shall be removed from the native areas and storm structures shall be inspected and maintained as necessary. At the completion of the third growing season (dependent on fuel availability; dominance of graminoid species; and favorable weather conditions), fire may be introduced to the planted areas as a management tool.

State and local permits shall be required prior to controlled burning. Burning shall be conducted by trained professionals experienced in managing smoke in urban environments. Prior to a controlled burn, surrounding property owners as well as local fire and police departments shall be notified. A burn plan detailing preferred wind direction and speed, location of fire breaks, and necessary personnel and equipment shall be prepared and utilized in planning and burn implementation.

The initial burn shall be dependent on fuel availability which is directly related to the quantity and quality of grasses contained within the plant matrix. Timing of the burn shall be determined based on results of the annual monitoring indicating species composition of the management area and other analysis of management goals. Generally, burns shall be scheduled from spring to fall on a rotational basis. Burn frequency shall also be dependent on the species composition within the management area. Generally, a new prairie restoration area shall be burned annually for two years after the second or third growing season after planting and then every 2-3 years thereafter, burning 50-75% of the area.

C. Long Term Wetland and Prairie Management/Maintenance

A final compliance report and Long-Term Operation and Maintenance Plan shall be submitted by the Developer/Owner's Environmental Specialist no less than 60 days prior to the expiration of any landscape Cash Bond or Letter of Credit posted for the native areas. Final acceptance and release shall be determined by the City of Naperville upon inspection of the site to verify compliance.

The Long -Term Operation and Maintenance Plan shall be written to include guidelines and schedules for burning, mowing, application of herbicide, debris/litter removal and inspection schedule for storm structures and sediment removal.

3.5 CLEAN UP AND PROTECTION

A. During landscape work, store materials and equipment where directed. Keep pavements clean and work areas and adjoining areas in an orderly condition.

B. Protect landscape work and materials from damage due to landscape operations, operations by other trades and trespassers. Maintain protection during installation and maintenance periods. Treat, repair or replace damaged landscape work as directed by Landscape Architect.

3.6 INSPECTION AND ACCEPTANCE

A. The Landscape Architect reserves the right to inspect seeds, plants, trees and shrubs either at place of growth or at site before planting for compliance with requirements for name, variety, size, quantity, quality and mix proportion.

B. Supply written affidavit certifying composition of seed mixtures and integrity of plant materials with respect to species, variety and source.

C. Notify the Landscape Architect within five (5) days after completing initial and/or supplemental plantings in each area.

D. When the landscape work is completed, including maintenance, the Landscape Architect will, upon request, make a final inspection to determine acceptability. After final acceptance, the Owner will be responsible for maintenance.

GRWA
GARY R. WEBER ASSOCIATES, INC.
LAND PLANNING
ECOLOGICAL CONSULTING
LANDSCAPE ARCHITECTURE
402 W. LIBERTY DRIVE
WHEATON, ILLINOIS 60187
PHONE: 630-668-7197
www.grwainc.com

CLIENT
M/I HOMES
2135 CITY GATE LANE, SUITE 620
NAPERVILLE, IL 60563

ENGINEER
CAGE
2200 CABOT DRIVE
SUITE 325
LISLE, IL 60532

NORTHWOODS OF NAPERVILLE
NAPERVILLE, ILLINOIS
LANDSCAPE SPECIFICATIONS

REVISIONS	
03	07.07.2025
02	06.20.2025
01	05.23.2025

DATE	04.04.2025
PROJECT NO.	MI24251
DRAWN	AJG/CLE
CHECKED	DHS
SHEET NO.	

811 Know what's below. Call before you dig.

XREFS:
PLOT CONFIG:

EXHIBIT G

CAGE CIVIL ENGINEERING

2200 Cabot Drive, Suite 325
Lisle, IL 60532
O: 630.598.0007

Project Name: NORTHWOODS OF NAPERVILLE
Project Location: NAPERVILLE, ILLINOIS
Date Prepared: JULY 7, 2025
Engineer: MCK
Plan Date: JULY 7, 2025

ENGINEER'S OPINION OF PROBABLE COST

NO.	ITEM	QUANTITY	UNIT	UNIT PRICE	COST
SCHEDULE I - EXCAVATION AND GRADING IMPROVEMENTS					
1	Mobilization	1	LUMP SUM	$5,000.00	$5,000.00
2	Silt Fence	4,400	LF	$2.50	$11,000.00
3	Tree Protection Fence	3,000	LF	$2.25	$6,750.00
4	Inlet Protection	17	EACH	$300.00	$5,100.00
5	Concrete Washout	1	EACH	$500.00	$500.00
6	Construction Entrance	1	LUMP SUM	$5,000.00	$5,000.00
7	Tree Removal - Acres	1	ACRE	$4,000.00	$4,000.00
8	Topsoil Stripping and Stockpiling	3,800	CY	$3.00	$11,400.00
9	Clay Excavation and Embankment	14,000	CY	$7.00	$98,000.00
10	Backfill Curb	3,155	LF	$1.00	$3,155.00
11	6" Topsoil Respread and Seeding	8,000	SY	$3.00	$24,000.00
12	Erosion Control Blanket (NAG SC-150)	3,725	SY	$3.00	$11,175.00
13	Gravity Retaining Wall	750	SF	$40.00	$30,000.00
14	Temporary Seeding	2	ACRE	$1,800.00	$2,970.00
12	BMP Seeding	1,425	SY	$5.00	$7,125.00
15	BMP Maintenance and Monitorying	3	YR	$2,800.00	$8,400.00
TOTAL SCHEDULE I - EXCAVATION AND GRADING IMPROVEMENTS					$233,575.00
SCHEDULE II - UNDERGROUND IMPROVEMENTS					
A.	**SANITARY SEWER IMPROVEMENTS**				
1	6" PVC Sanitary Sewer Service (Long)	31	EACH	$1,750.00	$54,250.00
2	6" PVC Sanitary Sewer Service (Short)	33	EACH	$550.00	$18,150.00
3	8" PVC Sanitary Sewer - 0'-12' Depth	1,460	LF	$35.00	$51,100.00
4	4' Diameter Manhole - 8'-12'	10	EACH	$3,000.00	$30,000.00
5	Trench Backfill - Mains 0'-12' Depth	1,460	LF	$35.00	$51,100.00
6	Televise Sanitary Sewer	1,460	LF	$2.00	$2,920.00
7	4" PVC Force Main	334	LF	$22.00	$7,348.00
8	Sanitary Lift Station (Public w/ Generator)	1	LUMP SUM	$250,000.00	$250,000.00
9	Connection to Existing Manhole	1	EACH	$1,500.00	$1,500.00
SUBTOTAL A - SANITARY SEWER IMPROVEMENTS					$466,368.00
B.	**WATER MAIN IMPROVEMENTS**				
1	6" DI Fire Service Line	500	LF	$40.00	$20,000.00
2	8" DI Water Main	2,130	LF	$50.00	$106,500.00
3	6" Valve and Box (Fire Service)	11	EACH	$1,500.00	$16,500.00
4	8" Valve & Vault, STD 4' Dia. w/FR & Lid	5	EACH	$2,750.00	$13,750.00
5	1.5" Tap, Corp Stop, Roundway & Box	64	EACH	$750.00	$48,000.00
6	1.5" House Service Type K (short)	45	EACH	$750.00	$33,750.00
7	1.5" House Service Type K (long)	19	EACH	$1,850.00	$35,150.00
8	Fire Hydrant with Auxiliary Valve	6	EACH	$4,000.00	$24,000.00

EXHIBIT H

Project Name: NORTHWOODS OF NAPERVILLE
Project Location: NAPERVILLE, ILLINOIS
Date Prepared: JULY 7, 2025
Engineer: MCK
Plan Date: JULY 7, 2025

ENGINEER'S OPINION OF PROBABLE COST

NO.	ITEM	QUANTITY	UNIT	UNIT PRICE	COST
9	Polyvinyl Pipe Wrap - 6"	500	LF	$1.10	$550.00
10	Polyvinyl Pipe Wrap - 8"	2,130	LF	$1.10	$2,343.00
11	Trench Backfill - Mains	565	LF	$35.00	$19,775.00
12	Dry Connection	1	EACH	$1,500.00	$1,500.00
SUBTOTAL B - WATER MAIN IMPROVEMENTS					$321,818.00
C.	**STORM SEWER IMPROVEMENTS**				
1	6" PVC Storm Sewer Pipe	648	LF	$30.00	$19,440.00
2	8" PVC Storm Sewer Pipe	389	LF	$35.00	$13,615.00
3	12" RCP Storm Sewer Pipe	147	LF	$35.00	$5,145.00
4	15" RCP Storm Sewer Pipe	275	LF	$38.00	$10,450.00
5	18" RCP Storm Sewer Pipe	279	LF	$42.00	$11,718.00
6	24" RCP Storm Sewer Pipe	107	LF	$52.00	$5,564.00
7	Precast Concrete Flared End Section w/Grate 8"	1	EACH	$800.00	$800.00
8	Precast Concrete Flared End Section w/Grate 12"	2	EACH	$1,000.00	$2,000.00
9	Precast Concrete Flared End Section w/Grate 15"	1	EACH	$1,250.00	$1,250.00
10	Precast Concrete Flared End Section w/Grate 18"	1	EACH	$1,500.00	$1,500.00
11	Precast Concrete Flared End Section w/Grate 24"	1	EACH	$2,000.00	$2,000.00
12	1'-0" Diameter Nyloplast Drain	2	EACH	$500.00	$1,000.00
13	2'-0" Diameter Nyloplast Drain	6	EACH	$750.00	$4,500.00
14	2'-0" Diameter Inlet	2	EACH	$900.00	$1,800.00
15	4'-0" Diameter Manhole	3	EACH	$2,500.00	$7,500.00
17	4'-0" Diameter Catch Basin	2	EACH	$3,000.00	$6,000.00
18	Rip Rap w/Fabric	180	SY	$100.00	$18,000.00
18	Trench Backfill	430	LF	$45.00	$19,350.00
22	Manhole to be Removed	5	EACH	$400.00	$2,000.00
21	Storm Sewer to be Removed	520	LF	$15.00	$7,800.00
22	Level Spreader	6	EACH	$5,000.00	$30,000.00
23	Inlet Filter	15	EACH	$330.00	$4,950.00
24	Televise Storm Sewer Line	776	LF	$2.00	$1,552.00
25	Outlet Control Structure	1	EACH	$7,500.00	$7,500.00
26	Permeable Pavers	7,460	SF	$20.00	$149,200.00
SUBTOTAL C - STORM SEWER IMPROVEMENTS					$334,634.00
TOTAL SCHEDULE II - UNDERGROUND IMPROVEMENTS					$1,122,820.00
SCHEDULE III - ON-SITE ROADWAY IMPROVEMENTS					
1	Subgrade Preparation - Fine Grading	4780	SY	$1.50	$7,170.00
2	Subbase Granular Material - 4" (CA6)	4780	SY	$8.00	$38,240.00
3	Aggregate Base Course - 10"	3730	SY	$15.00	$55,950.00
4	Hot-Mix Asphalt Binder Course, N50 - 2.5"	3730	SY	$15.00	$55,950.00
5	Hot-Mix Asphalt Surface Course, N50 - 1.5"	3730	SY	$10.00	$37,300.00
6	Concrete Curb Type B-6.12	3150	LF	$20.00	$63,000.00
7	Curb & Gutter Removal	2800	LF	$12.00	$33,600.00
8	Permeable Pavers	830	SY	$20.00	$16,600.00
9	Pavement Removal	10950	SY	$10.00	$109,500.00
10	PCC Sidewalk - 4" with Subbase	7635	SF	$7.00	$53,445.00
11	Sidewalk Removal	4665	SF	$1.50	$6,997.50
12	Pavement Markings	1	LS	$3,000.00	$3,000.00

Project Name:	NORTHWOODS OF NAPERVILLE
Project Location:	NAPERVILLE, ILLINOIS
Date Prepared:	JULY 7, 2025
Engineer:	MCK
Plan Date:	JULY 7, 2025

ENGINEER'S OPINION OF PROBABLE COST

NO.	ITEM	QUANTITY	UNIT	UNIT PRICE	COST
TOTAL SCHEDULE III - ON-SITE ROADWAY IMPROVEMENTS					$480,752.50
SUBTOTAL SCHEDULES I-III					$1,837,147.50
CONTINGENCY @ 10%					$183,714.75
TOTAL					$2,020,862.25

Note: The opinion of probable costs shown, and any resulting conclusions on project financial or economic feasibility or funding requirements, have been prepared for guidance in project evaluation and implementation from the information available at the time the opinion was prepared. The final costs of the project and resulting feasibility will depend on actual labor and material costs, competitive market conditions, actual site conditions, final project scope, implementation schedule, continuity of personnel and engineering, and other variable factors. As a result, the project costs will vary from the opinion of the probable costs presented herein.

EXHIBIT H