## GENERAL NOTES

1. LOOP PLACEMENT IS DEFINED IN TERMS OF WHERE THE VEHICLE ENGINE BLOCK WOULD BE OVER THE LOOP IF THE CENTER OF THE DRIVER'S SIDE WINDOW IS AT THE SERVICE POINT . THE GOAL IS TO ENSURE THERE IS ONLY ROOM FOR ONE VEHICLE BEHIND THE PREVIOUS LOOP AND THE MERGE POINT; THIS IS HOW SEQUENCING IS POSSIBLE.
2. REFER TO ELECTRICAL DRAWINGS IN THE NEXT GENERATION PROTOTYPE SET FOR FURTHER INFORMATION ON CONDUIT LOCATIONS AND QUANTITY CORRESPONDING TO EACH DRIVE THRU SET UP OPTION.
3. REFERENCE TO MASTER SCHEDULE IN THE NEXT GENERATION PROTOTYPE SET FOR TRAFFIC STRIPING PAINT.
4. DIRECTIONAL SIGNS ARE LIMITED TO 6 SQ FT.

## SPACE ALLOCATION & TRASH ENCLOSURE GUIDELINES

1. PROVIDE CONCRETE PAD AND FACE BRICK ENCLOSURE AROUND DUMPSTER. FACE BRICK WALL ENCLOSURE SHALL HAVE EXTERIOR FINISH/ COLOR MATCHING WITH THE BUILDING FINISH.

## SITE NOTES:

1. LOCATE EXTERIOR MENU SYSTEM AT 6th CAR FROM THE DRIVE THRU WINDOW, PREVIEW BOARD AT 2nd CAR BEHIND. REFER TO ELECTRICAL PLANS.
2. REFER TO CIVIL ENGINEERING DWGS. FOR ALL SITE DESIGN REQUIREMENTS.
3. REFER TO PHOTOMETRY DRAWING AND NEXT GENERATION PROTOTYPE SET FOR SITE LIGHTING CRITERIA.
4. REFER TO LANDSCAPE DRAWINGS FOR SITE LANDCAPING.
5. FOR ALL PARKING SPACE AND DRIVEWAY - REFER TO CIVIL ENGINEERING DWGS.
6. CONCRETE PAD AT DRIVE THRU LOOP/DETECTORS SHOULD MATCH THE ADJACENT LOT SURFACE MATERIAL AS MUCH AS POSSIBLE - PROVIDE BLACK STAINED CONCRETE WHEN USED ADJACENT TO ASPHALT MATERIAL.
7. PERIMETER LANDSCAPING- REFER TO LANDSCAPE DRAWINGS.
8. REFER TO CONSTRUCTION SPECIFICATIONS ON GN-1 SHEETS IN THE NEXT GENERATION PROTOTYPE SET FOR ADDITIONAL SITE PLAN INFO.
9. G.C. TO COORDINATE W/ FRANCHISEE EXACT SIZE OF PAD FOR MENUBOARD, SPEAKER TOWER, CANOPY & ORDER CONFIRMATION BOARD - SEE WEBSITE FOR MOUNTING REQUIREMENTS & FOR COMPLETE INSTALLATION INFORMATION AND DETAILS, http://extranet.dunkinbrands.com
10. G.C. TO PROVIDE PVC CONDUIT FOR ALL NEW LOCATIONS, REFER TO ELECTRICAL DRAWING FOR ADDITIONAL INFORMATION ON LOOP REQUIREMENTS; SAW-CUT AT EXISTING LOCATION WHERE NECESSARY
11. DRIVE-THRU MENU SHOULD BE PLACED AT A 30°ANGLE TO ONCOMING TRAFFIC WITH THE EXCEPTION OF THE "ALL IN ONE" CANOPY/DIGITAL MENU BOARD OPTION.
12. HOME RUN CONDUIT TO DRIVE THRU TIMER MONITOR ADJACENT TO DRIVE THRU WINDOW.
13. 6" BOLLARD, REFER TO THE NEXT GENERATION PROTOTYPE SET FOR DETAILS.
14. CURBSIDE PICK UP PARKING SIGN.
15. LANE DELINEATOR PLANTER.
16. LANDSCAPE BOX FOR LOOPS. LOOP CONDUIT TO GO TO LANDSCAPE BOX AND BACK TO BUILDING FOR FINAL CONNECTIONS. MFR: ORBIT (OR EQUAL) / MODEL: RECTANGULAR VALVE BOX.
17. LOCATION FOR CONCRETE PAD FOR ELECTRICAL TRANSFORMER. VERIFY WITH THE LOCAL UTILITY FOR ANY REQUIRED ADDITIONAL CLEARANCES.
18. ALL GROUND MOUNTED EQUIPMENTS SHALL BE SCREENED.
19. LOCATION FOR METERING CABINET & MAIN DISCONNECT. SHALL BE INSTALLED BETWEEN TEN-FEET (10') AND FIFTEEN-FEET (15') OF TRANSFORMER. VERIFY WITH THE LOCAL UTILITY FOR ANY REQUIRED ADDITIONAL CLEARANCES.
20. PROVIDE 8" BOLLARDS TO PROTECT ELECTRICAL TRANSFORMER PER DPUE SPECIFICATION C10-2222.

## AREA/ FAR & PARKING:

AREA CALCULATIONS:
- SITE AREA (LOT 1): 23,153 SF
- FAR: GROSS BUILDING AREA/ SITE AREA= 2,953 SF/ 23,153 SF= 0.127
- RESTAURANT (DRIVE THRU ONLY- NO SEATING)- 1ST FLOOR: 1,078 SF
- OFFICE AREA- 1ST FLOOR: 380 SF + 2ND FLOOR:1,403 SF
- TOTAL BUILDING AREA- 2,953 SF

PARKING REQUIREMENTS:
- BAKERIES: 1,078 SF: 4.5 SPACES/ 1000 SF= 4.85 SPACES
- OFFICE: 380 SF + 1,403 SF= 1,788 SF: 3.3 SPACES/ 1000 SF= 5.88 SPACES
- TOTAL REQUIRED PARKING: 4.85 + 5.88= 10.73 SPACES= 11 SPACES
- PROVIDED PARKING: 10 SPACES (9 REGULAR + 1 ADA)

BICYCLE PARKING:
- REQUIRED PARKING: 5% OF VEHICLE PARKING: 5% OF 11= 0.55 SPACES
- MINIMUM REQUIRED: 3 SPACES
- PROVIDED: 3 SPACES

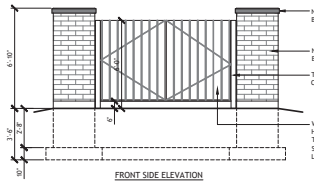


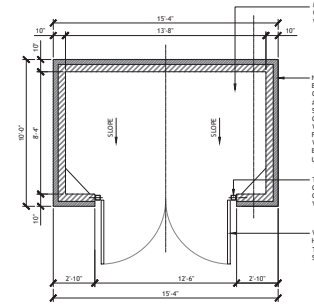


## REFUGE ENCLOSURE DETAIL 2

SCALE: 1/4"= 1'-0"

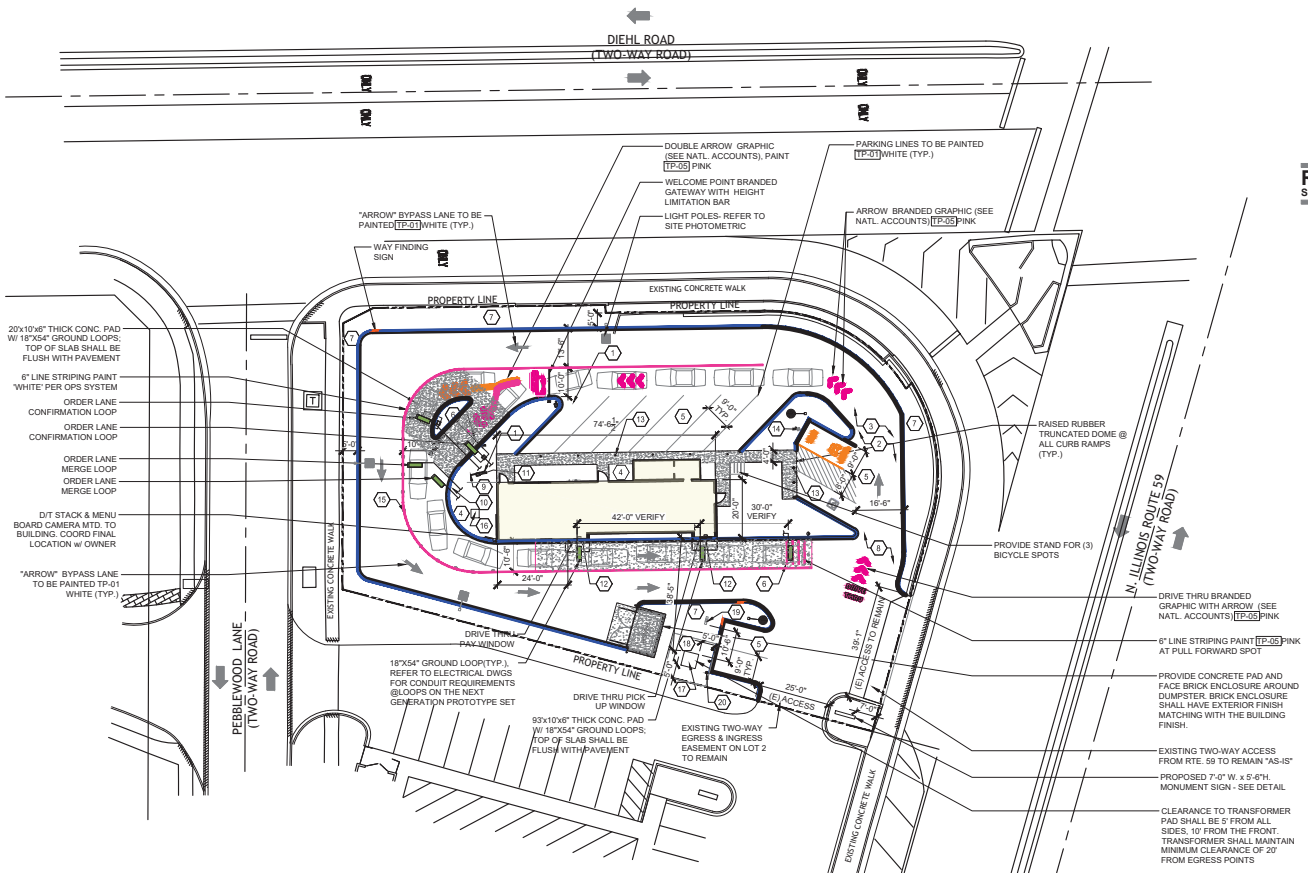


## ARCHITECTURAL SITE PLAN 1

SCALE: 1/20"= 1'-0"

### DEPARTMENT OF PUBLIC UTILITIES - ELECTRIC GENERAL NOTES:

1. THE DPUE ENGINEER FOR THIS PROJECT IS GIOVANNI HERNANDEZ. THE GENERAL CONTRACTOR PLEASE CONTACT HIM AT (630)-548-1212 WITH ANY QUESTIONS REGARDING THE ELECTRIC SERVICE.
2. THE DEVELOPER OR GENERAL CONTRACTOR SHALL SUPPLY THE DPU-E ENGINEER WITH CATALOG CUTS FOR ALL CT/METER EQUIPMENT (INCLUDING BUT NOT LIMITED TO METER SOCKETS, PT CABINET, CT CABINET, DISCONNECT CABINET) AND TRANSFORMER PAD/VAULT. THE CATALOG CUTS SHALL BE APPROVED BY DPU-E PRIOR TO PURCHASING.
3. THE CT/ METER CABINET SHALL BE TOP FED.
4. CT/ METER EQUIPMENT ARE LONG LEAD TIME ITEMS AND DPU-E SHALL NOT BE HELD RESPONSIBLE FOR DELAYS RESULTING FROM NON-COMPLIANT CT/ METER EQUIPMENT.
5. THE GENERAL CONTRACTOR SHALL PROVIDE NAME AND CONTACT INFORMATION FOR ELECTRICAL CONTRACTOR FOR THIS PROJECT AS SOON AS ONE IS SELECTED.
6. ELECTRIC FACILITIES SHALL BE INSTALLED PURSUANT TO SECTION 8-1C-3 OF THE CITY OF NAPERVILLE MUNICIPAL CODE, WHICH REQUIRES A CONSTRUCTION FEE PAYMENT FOR INSTALLATION OF ELECTRIC FACILITIES.
7. LABEL ALL METER SOCKETS WITH THE COMPLETE ADDRESS IN 1" LETTERS USING PERMANENT STICKERS. IN MULTIPLE METER BANKS, THE COMPLETE ADDRESS MAY BE ON THE DISCONNECT SWITCH AND THE SUITE NUMBERS ON THE METER SOCKETS. THE ELECTRICAL SERVICE EQUIPMENT WILL NOT PASS INSPECTION WITHOUT APPROPRIATE ADDRESS LABELING.
8. APPROVAL OF METERING EQUIPMENT BY DPU-E DOES NOT REMOVE DEVELOPER'S RESPONSIBILITY TO COMPLY WITH THE LATEST VERSION OF THE NATIONAL ELECTRICAL CODE AS ADOPTED BY THE CITY OF NAPERVILLE. DETERMINATION OF COMPLIANCE WITH THE NATIONAL ELECTRICAL CODE WILL BE MADE BY THE TRANSPORTATION, ENGINEERING AND DEVELOPMENT DEPARTMENT.
9. A CUSTOMER'S GROUNDING CONDUCTOR SHALL NOT BE CONNECTED TO DPU-E DISTRIBUTION EQUIPMENT.
10. DPUE WILL PROVIDE, INSTALL, AND MAINTAIN THE TRANSFORMERS, ALL PRIMARY (15KV) CABLE AND CONDUIT, AND THE METERS AND INSTRUMENT TRANSFORMERS. DPUE WILL ALSO MAKE THE FINAL CONNECTIONS IN THE TRANSFORMERS ONCE THE INSPECTION IS COMPLETE AND THE BUILDING IS READY TO BE ENERGIZED.
11. THE DEVELOPER IS RESPONSIBLE FOR PROVIDING, INSTALLING, AND MAINTAINING THE TRANSFORMER PAD/VAULT, ALL SERVICE LATERAL (480V) CABLE AND CONDUIT, THE SERVICE ENTRANCE EQUIPMENT INCLUDING THE CT/METER CABINET AND ALL BANKED METER SOCKETS.
12. THE DEVELOPER SHALL COORDINATE SITE CONSTRUCTION WITH DPU-E TO ALLOW ELECTRIC FACILITIES TO BE INSTALLED PRIOR PAVING AND CURBING. DPU-E REQUIRES 30 WORKING DAYS ADVANCE WRITTEN NOTICE PRIOR TO PAVEMENT INSTALLATION TO ALLOW FOR THE INSTALLATION OF ELECTRIC FACILITIES. GRADE ELEVATION MUST BE WITHIN 4" OF FINAL GRADING BEFORE ELECTRIC FACILITIES CAN BE INSTALLED.
13. AT ALL TIMES, THE CUSTOMER SHALL BE SOLELY RESPONSIBLE FOR MAINTAINING A SUITABLE APPROACH TO THE METER LOCATION, WITH NO OBSTRUCTIONS WITHIN FOUR (4) FEET OF THE FRONT AND TWO (2) FEET OF THE SIDES OF THE METER. PER NAPERVILLE SERVICE RULES AND POLICIES 22.2.F.
14. CLEARANCE TO TRANSFORMER PAD SHALL BE 5' FROM ALL SIDES, 10' FROM FRONT, AND THE AREA ABOVE MUST BE COMPLETELY CLEAR OF OBSTRUCTION. NO TREES, SHRUBS, OR OTHER OBSTACLES WILL BE ALLOWED WITHIN THIS AREA. TRANSFORMER PAD SHALL MAINTAIN MINIMUM CLEARANCE OF 20' FROM EGRESS POINTS. PER DPUE SPECIFICATIONS C10-2130 AND C30-0016.
15. DPU-E REQUIRES A MINIMUM 5' OF SEPARATION BETWEEN ITS ELECTRIC FACILITIES AND ANY FIRE HYDRANTS STORM DRAINS, STORM SEWERS, WATER MAINS, GAS MAINS, ETC. THAT RUN PARALLEL TO ITS FACILITIES.
16. THE TRANSFORMER IS LOCATED NEAR VEHICULAR TRAFFIC. DEVELOPER IS RESPONSIBLE FOR PROVIDING AND INSTALLING 8" BOLLARDS PER DPUE SPECIFICATION C10-2222.

dunkin' brands

PROFESSIONAL DESIGN FIRM ARCHITECT
CORPORATION LICENSE NO.: 184.00943
License Expires: 04/30/2023


PUROHIT ARCHITECTS
251 BRADWELL ROAD,
INVERNESS, IL 60010
Tel. (847) 220-8037
Cell. (847) 942-8777
info@purohitarchitects.com
www.purohitarchitects.com



DO NOT SCALE THE DRAWINGS. PUROHIT ARCHITECTS, INC. ASSUME NO RESPONSIBILITY FOR USE OF INCORRECT SCALE. CONTRACTOR SHALL VERIFY ALL EXISTING CONDITIONS PRIOR TO PROCEEDING WITH CONSTRUCTION. IN THE EVENT THAT THE CONTRACTOR DISCOVERS ANY ERROR, OMISSION OR CONFLICT AS TO THE INTENT OF THE CONTRACT DOCUMENTS OR ANY DEFECT IN THE CONSTRUCTION AND COMPLETION OF THE WORK, THE CONTRACTOR SHALL IMMEDIATELY NOTIFY THE OWNER OR THE ARCHITECT AND SEEK CORRECTION OR INTERPRETATION THEREOF PRIOR TO STARTING THE AFFECTED WORK.

THESE PLANS AND SPECIFICATIONS ARE PROTECTED UNDER FEDERAL COPYRIGHT LAWS. © PUROHIT ARCHITECTS, INC. MAINTAINS OWNERSHIP OF SUCH AND ALL RIGHTS AND PRIVILEGES. THESE DRAWING ARE NOT TO BE REPRODUCED OR COPIED IN WHOLE OR PART. IT IS NOT TO BE USED ON ANY OTHER PROJECT


2-Story DD Next Gen - D/T Only

Dunkin' GO

1671 N. IL Rte. 59, Naperville IL 60563

P.C. No.:

Document Record:

| Issued Date | Description |
|---|---|
| 04.01.2021 | For Owner & Village Staff Review |
| 09.24.2021 | For Village Staff Review |
| 11.08.2021 | For Owner Review |
| 11.29.2021 | For Owner Review |
| 03.14.2022 | For Village Staff Review - Variance |
| 11.17.2022 | For PZC Approval- Staff Review-1 |
| 01.26.2023 | For PZC Approval- Staff Review-2 |
| 03.07.2023 | For PZC Approval- Staff Review-3 |
| 03.29.2023 | For PZC Approval- Staff Review-4 |

Issue Date: MARCH 29, 2023

Drawn By: PAI

Sheet: ARCHITECTURAL SITE PLAN

SP1.0

PAI PROJECT NUMBER 21129.00


These drawings may have been reproduced at a scale different than originally drawn. Owner and Architect assume no responsibility for use of incorrect scale. Do not scale drawings, contractor shall verify all existing conditions prior to proceeding with construction and notify architect immediately of any discrepancies or conflicts.

© 2020 PUROHIT ARCHITECTS, INC.


EXHIBIT D